DryLin®...

Linear technology, lead screw technology and drive technology

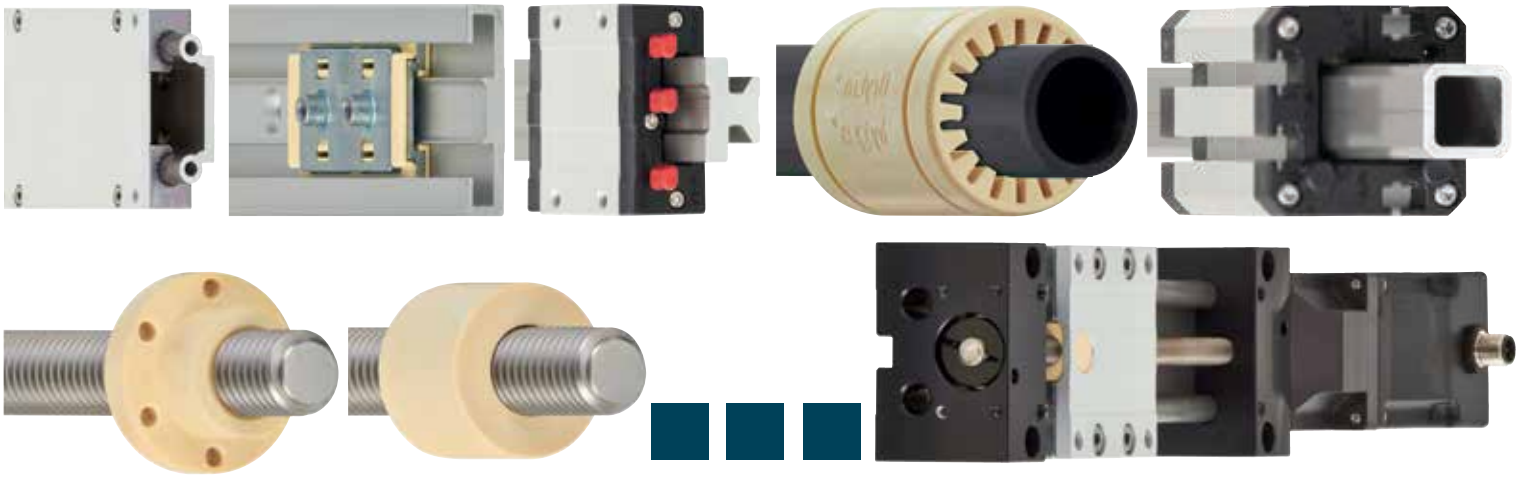

...plastics

DryLin® - Application examples

Typical industries and application areas

- Packaging machinery
- Lab automation
- Medical equipment
- Marine
- In-cab applications (construction/agriculture)
- Aircraft interiors

Label feeding system/Packaging technology
Quick and flexible format adjustment with absolute freedom from external lubrication at lower costs - implemented with the DryLin® T linear guide system. Further advantage: Guide carriage with manual clamping.

DryLin® - Application examples

CHAMPAGNE-BOTTLE SEALING MACHINE
With no required external lubrication and high chemical resistance, DryLin® guides perform well in food industry applications

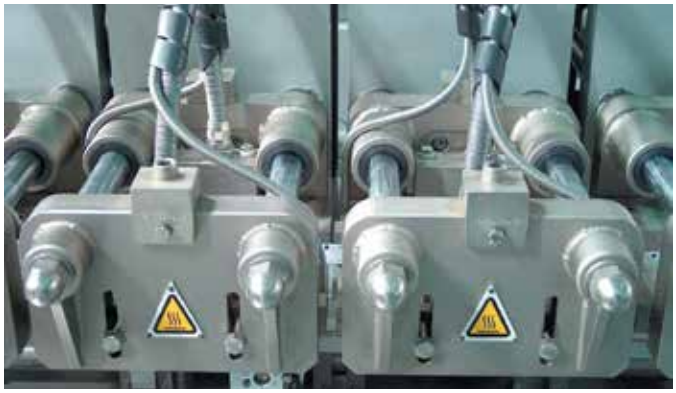

FORMING, FILLING AND SEALING MACHINE
Self-lubricating DryLin® high temperature bearings up to 248°F (120°C), are used in welding jam of this form, fill and seal machine

DOOR ADJUSTMENT
Smooth, low-noise operation, as well as significant cost advantages are obtained by using DryLin® W hybrid rolling bearings to guide the guards of machine tools

SYSTEMS FOR THE PRODUCTION OF ALUMINUM CARTRIDGES
The lack of external lubricants and the resistance to paint mist led to the use of DryLin® R linear plain bearings

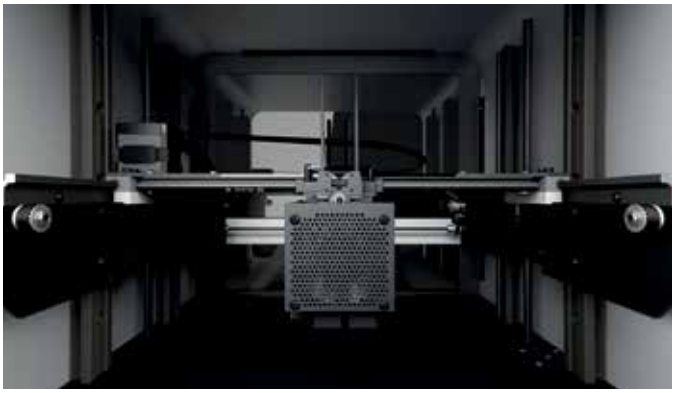

3D-PRINTER
DryLin® T and W, as well as SD lead screw units travel without external lubrication, eliminating the risk of contaminating the housing, filament, and printed object in this 3D printer

MOBILE AND STATIONARY SAW MILLS
The DryLin® W modular linear guide system with iglide® J liners smoothly adjust the saw blade guide of this mobile saw mill

DryLin® - Advantages

DryLin® linear technology:
5 maintenance-free DryLin® linear guide systems based on rails or shafts

DryLin® lead screw technology:
maintenance-free lead screw modules, efficient dryspin high helix, trapezoidal and metric, and ACME threads

DryLin® drive technology:
ready to fit maintenance-free linear modules for manual or motorized operation

Slide instead of roll! Maintenance-free dry-tech plastics

DryLin® linear guide systems, lead screw modules and drive units are all based on maintenance-free, self-lubricating **dry-tech** tribologically-optimized plastics. All DryLin® linear bearings feature durable, quiet-running plastic sliding elements which are low in weight and reduce costs and installation time due to their simple modular design. Solid lubricants incorporated into the bearing material mates with the shaft, making it suitable for continual dry operation, as well as, self-lubricating and maintenance-free throughout it's service life.

- Self-lubricating and maintenance-free
- Resistant to dirt, dust and humidity
- Quiet, smooth operation

Typical application areas:
- Machine building ● Woodworking
- Material handling ● Furniture design ● Aircraft interiors
- Lab/medical ● 3D printers/scanners
- Packaging applications

Lifetime calculation online
➤ **www.igus.com/DryLin-expert**

Online product finder for lead screw drives

Online configurator for the drive technology

Price breaks online
No minimum order value.

Available from stock
Detailed information about delivery time online.

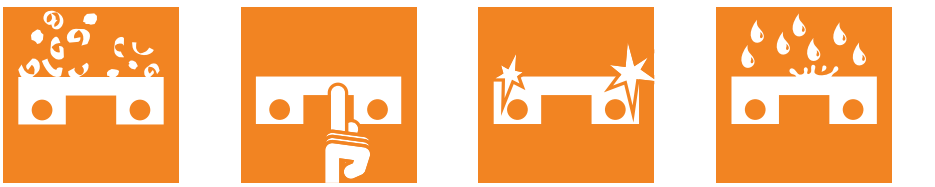

DryLin® - Product overview

DryLin® W profile guides ➤ Page 911
- The DryLin® Toolkit with 14 different profiles and more than 50 carriage options
- Versatile
- Easy installation
- Compact

DryLin® N low-profile guide systems ➤ Page 951
- Low profile installation heights from 6 to 12 mm
- Very low weight
- Many carriage options – also with preload
- Low cost

DryLin® T rail guide systems ➤ Page 971
- Same dimensions as ball guide systems
- Adjustable clearance options
- Automatic clearance adjustment options
- High static load capacity

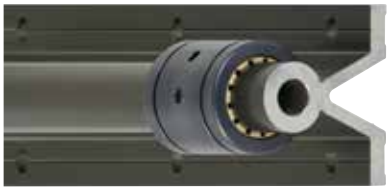

DryLin® R round shaft guides ➤ Page 995
- Same dimensions as standard ball bearings (inch and metric)
- For all shaft materials
- Lightweight
- Interchangeable liners for design flexibility

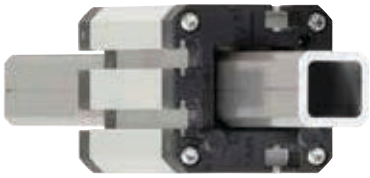

DryLin® Q square linear guides ➤ Page 1119
- Maintenance-free, torque resistant square linear guides
- Lightweight profiles made from hard-anodized aluminum
- Manually adjustable carriages with/without manual clamp
- Numerous fastening options

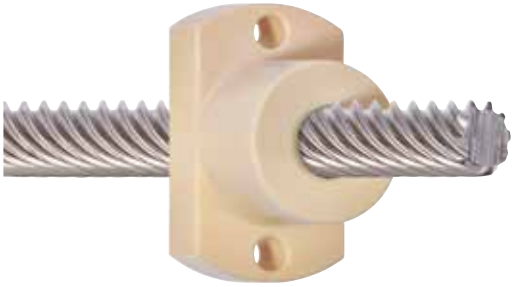

DryLin® lead screw technology

dryspin® DST ➤ Page 1153
- Greater efficiency than typical lead screw nut geometry

DryLin® SD ➤ Page 1175
- Trapezoidal, ACME and high helix lead screws and lead screw nuts

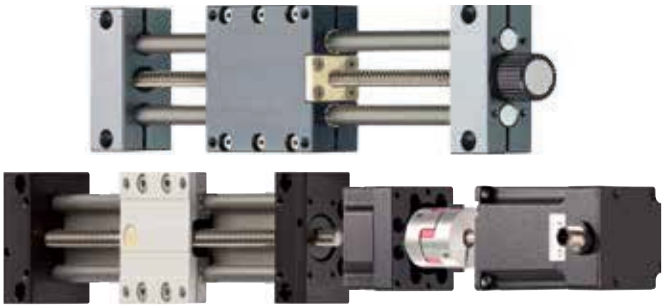

DryLin® drive technology

DryLin® linear modules ➤ Page 1229
- With lead screw drives or toothed belt drives

DryLin® E – "electrical" ➤ Page 1317
- Linear stages with motor

DryLin® - Sliding instead of rolling

DryLin® is a range of maintenance, self-lubricating linear bearings. Available as modular components or fully assembled linear actuators with belt or screw drives. Other benefits include strength and resistance to environmental factors such as dirt, moisture, chemicals, and shock loads.

- Maintenance-free
- Wear-resistant
- Insensitive to shocks and vibrations
- Corrosion resistant
- Resistant to dirt, dust and humidity
- Low coefficients of friction
- Weight reduction
- Dry-running
- Suited for short-stroke applications
- High static load capacity
- High speeds and accelerations possible
- Self-lubricating
- Very quiet operation
- Low magnetism

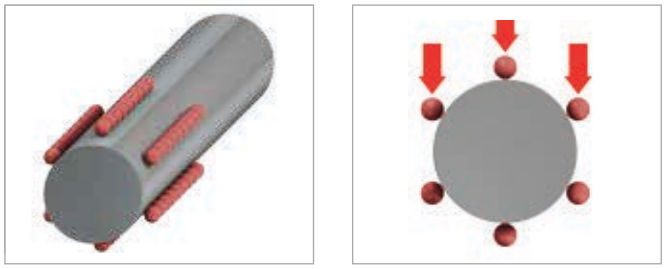

Roller bearings – Point contact

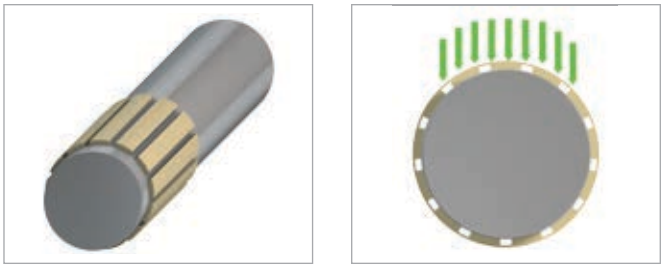

Plain bearings – Surface contact

Resistant to dirt, dust and moisture - By self-lubricating liners and dirt channels.

Optimum load distribution

DryLin® linear bearings operate on sliding pads unlike traditional ball bearing systems. This provides a larger contact surface, resulting in reduced surface pressure. This leads to a number of advantages including:

- Ability to operate on non-hardened shaft materials (such as 300 series stainless)
- Operation on non metallic shafts (such as hard anodized aluminum)
- Eliminated galling and damage to the shaft

Shafts and rail materials

The large surface area of DryLin® linear plain bearings, when compared to traditional ball bearings, offers greatly reduced pressure under a given load. This allows for the use of soft shaft materials, including hard anodized aluminum, which in turn offers reduced friction and wear. 300 series (VA) stainless steel shaft may also be used when chemical resistance is required. Of course, standard hardened linear shafts can also be used with DryLin® linear bearings.

Dry running, no external lubricating

DryLin® linear bearing systems are designed for operation without external lubrication. As there is no grease or oil present, the system naturally self cleans, with particles, including even coarse dirt and sand, being wiped away from the sliding surface by the ribbed design of the DryLin® bearing.

DryLin® - Sliding instead of rolling

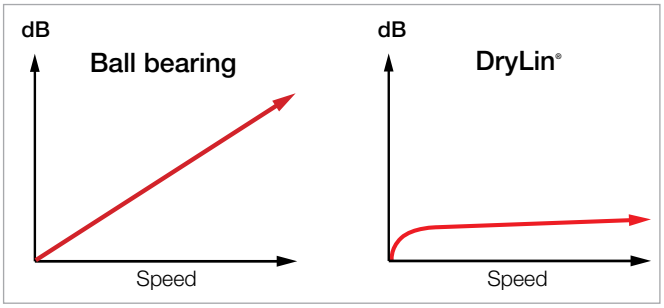

Figure 01: Comparison of noise development

Low noise

The quiet operation of DryLin® linear bearings is a benefit of the sliding operation, which is extremely quiet, with only a slight audible noise. With traditional roller ball bearings, collisions between the steel balls and the shaft or rail surface can create a higher level of noise.

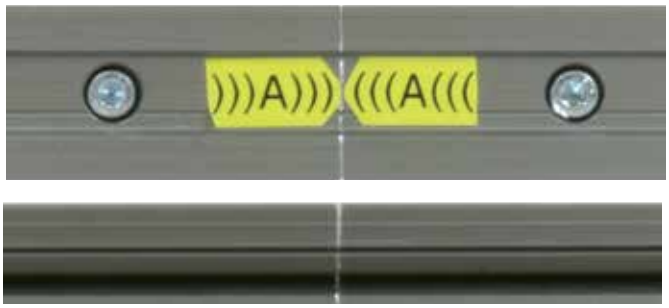

Rail joint

Maximum stroke lengths

The butting of guide rails is possible with most DryLin® linear guides. The rails are slightly chamfered, aligned and mounted without damage. The resulting joint can be passed over by the sliding element, where a rolling bearing may become stuck or damaged. Using this process, stroke lengths of more than 20 meters have been achieved. A joint marking provided at the igus® factory simplifies the assembly process. Please contact igus® for more information and pricing.

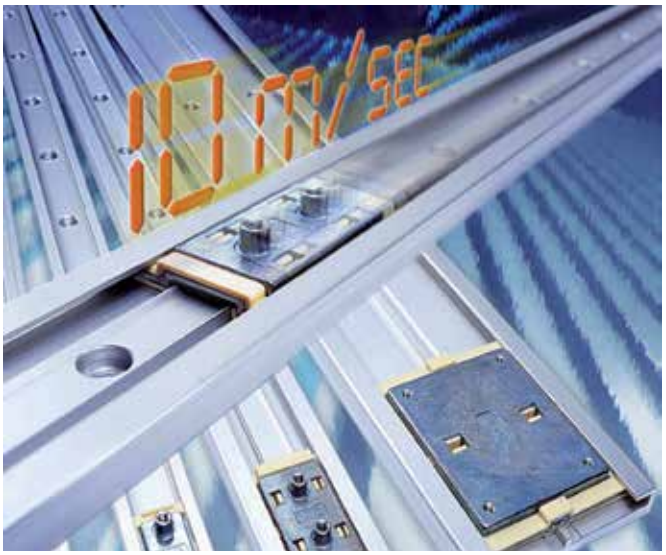

Permitted speeds/accelerations

With low loads DryLin® has been tested at speeds up to 49 fps (10 m/s). The maximum permissible speed is related to the bearing load - the lower the load the higher the permissible speed. Since DryLin® does not rely on complicated rolling elements, but instead on specially engineered, low wear, low friction glide strips, extremely high speeds and accelerations are now possible. This means that DryLin® is ideal for applications where cycle and accelerations must be increased.

More significant than the maximum speed is the average speed-per-cycle time. Therefore, in order to calculate the suitability of a particular DryLin® system, the average surface speed should be determined. In applications with intermittent cycles, the highest average surface speed is significant; this is an average taken over a 10-30 minute time period

The use of DryLin® S hard anodized aluminum as a shaft material decreases the operating temperature in the bearing system due to its thermal conductivity and micro-finish. It is recommended for most applications with short-strokes or high cycles when using the iglide® J/J200 material liners. It is the material we have designed for use with all of our profile guides as well.

Thermal conductivity	[W / m · K]
Aluminum	235
Unalloyed steel	48 - 48
High-alloyed steel	15

Average surface speed

= Travel distance per cycle [m] / total cycle time [sec].

DryLin® - Sliding instead of rolling

Extreme application conditions in the offshore industry

Filling machine, Krones AG, Rosenheim

The iglide® T500 (X)* material in heavy-duty use under high temperatures in foundries

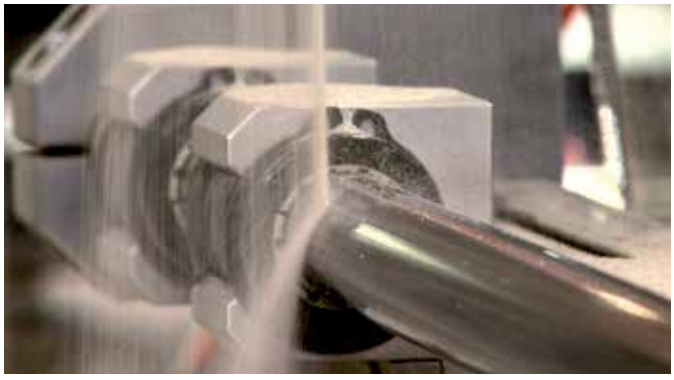

Self-lubricating and resistant to dirt

Corrosion resistance

The low humidity absorption of iglide® J, J200 and T500 DryLin® bearings and liners permit their use for underwater applications. The use of stainless steel or anodized aluminum shafts provides for a corrosion-resistant shaft partner. Anodized aluminum is resistant to neutral chemical substances, with a pH between 2 and 7. For special applications separate tests are recommended.

Chemical resistance

iglide® J is resistant to weak acids, diluted alkalis as well as to fuels and all types of lubricants. The intensive cleaning of machines with standard commercial cleaning agents, even in the food industry, is no problem for DryLin® guides. For applications in environments with more aggressive cleaning agents, the use of the DryLin® R bearings with iglide® T500 liners is recommended. The resistance of linear bearing systems is equally dependent on the shaft or rail material. For the highest resistance to chemicals, a 304 or 316 stainless shaft material is optimal.

Operating temperatures

Sliding elements made from iglide® J and J200 can be used in the temperature range between -40°F and +194°F (-40 and +90°C). In applications with aluminum shafts or rails, distinctly higher loads and speeds can be attained due to the excellent thermal conductivity. Sliding elements made of iglide® T500 can be used in temperatures ranging from -238°F to 482·F (100°C to +250°C).

Resistance to dirt

Applications exposed to coarse dirt and sand are possible since debris is wiped away by the sliding of the plain bearing. The lack of required external lubrication means that seals are not required as there is no grease or oil to attract dust and dirt.

Hard anodized surfaces

For DryLin® systems using iglide® J or J200 hard anodized shafts have optimized wear properties, high chemical resistance, and a high degree of hardness. Color alterations and slight crazing of the anodized surface may occur, but do not alter the wear resistance, corrosion resistance, or bearing properties. Cut surfaces will not be coated. If this is required please contact igus®.

***X is the European equivalent material for iglide® T500**

DryLin® - Product overview

	The "all-rounder" – iglide® J	The specialist – iglide® J200	The extreme – iglide® T500 (X)*	The marathon runner – iglide® E7	FDA compliant – iglide® A180
Optimal shaft material(s)	all shaft materials	Aluminum, hard anodized	Hardened stainless steel Hard chromed plated steel	Steel stainless steel shaft	all shaft materials
Application temperature	-40°F to +194°F (-40°C to +90°C)	-40°F to +194°F (-40°C to +90°C)	-148°F to +482°F (-100°C to +250°C)	-40°F to +194°F (-40°C to +90°C)	-40°F to +194°F (-40°C to +90°C)
Best coefficient of friction with	Steel shaft	Aluminum, hard anodized	Steel hard chrome-plated	Steel stainless steel shaft	Stainless steel shaft
Maximum life time	Aluminum, hard anodized	Aluminum, hard anodized	Hardened stainless steel	Steel stainless steel shaft	Stainless steel shaft
Permissible stat. surface pressure	35 MPa	23 MPa	150 MPa	18 MPa	28 MPa
Moisture absorption	1.3% weight	0.7% weight	0.5% weight	< 0.1% weight	0.2% weight
Volume resistance	> 10^{13} Ωcm	> 10^{8} Ωcm	< 10^{5} Ωcm	> 10^{9} Ωcm	> 10^{12} Ωcm
Part No.	JUM-...	J200UM-...	TUM-.../XUM-...	E7UM-...	A180UM-...

igus® provides various materials for sliding elements and counter partners for linear systems. Extensive lab tests and years of field experience have shown that iglide® J, J200 and T500 (X)* are the ideal materials for most linear applications due to their favorable wear and friction properties.

Ideal material combinations

iglide® J:

- Maintenance-free, dry running
- Low coefficients of friction with all materials
- Excellent wear resistance
- Very low humidity absorption

➤ More about iglide® J ➤ **Page 115**

iglide® J200:

- Completely maintenance-free
- Extremely high service life on hard-anodized aluminum
- Low coefficients of friction with hard-anodized aluminum
- Excellent wear resistance with anodized aluminum

➤ More about iglide® J200 ➤ **Page 313**

iglide® T500 (X)*:

- Completely maintenance-free
- Temperature resistance -148°F to 482°F (-100°C to +250°C) in continuous operation
- Universal resistance to chemicals
- Very low humidity absorption

➤ More about iglide® T500 (X)* ➤ **Page 193**

Other possible materials:
iglide® A180, FDA-compliant

➤ More about iglide® A180 ➤ **Page 423**

iglide® E7, steel and stainless shaft specialist

➤ More information about iglide® E7 ➤ **Page 1372**

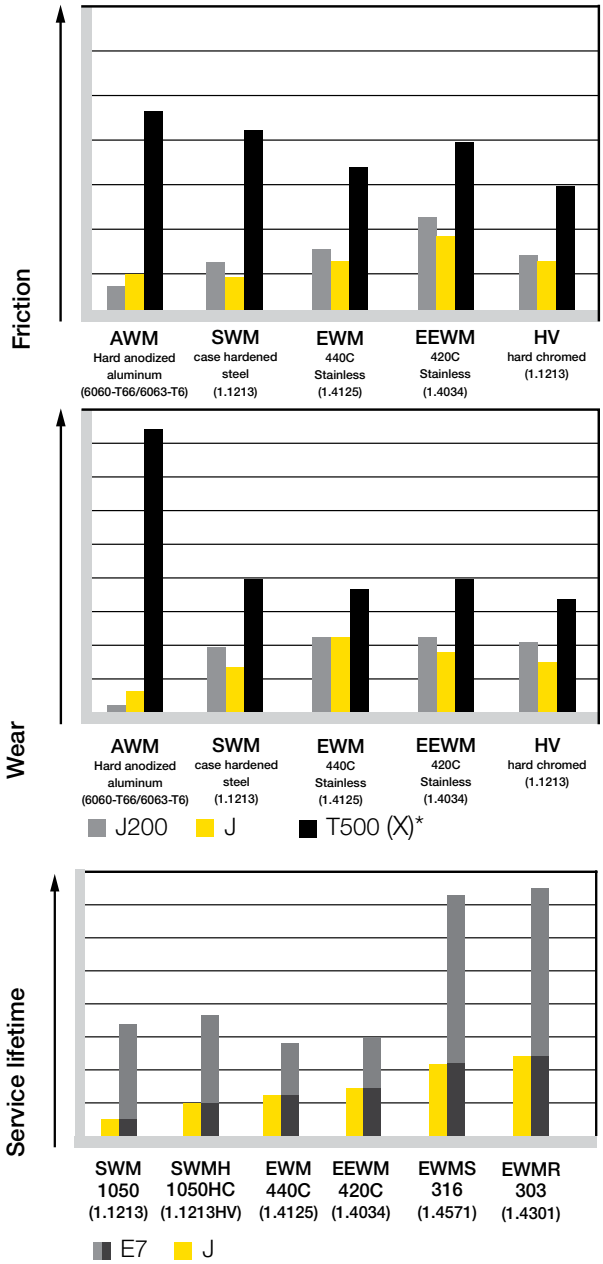

*X is the European equivalent material for iglide® T500

Resistant to dirt and dust

DryLin® linear bearings offer the ultimate dirt and dust resistance. As the requirement for external lubrication is eliminated, dirt particles are not attracted to grease or oil, and any particles on the shaft or rail are removed by the plastic sliding element, which works as a wiper. With out a need for seals, the sliding elements are able to guide dirt through the bearing grooves, minimizing pressure buildup in front of the bearing. Liners are easily replaceable if worn due to extremely dirty conditions.

Typical industries and application areas

● Agricultural equipment ● Plant ● Printing applications ● Glass ● Heavy Duty
● Woodworking ● Packaging ● Lab machines ● Medical devices

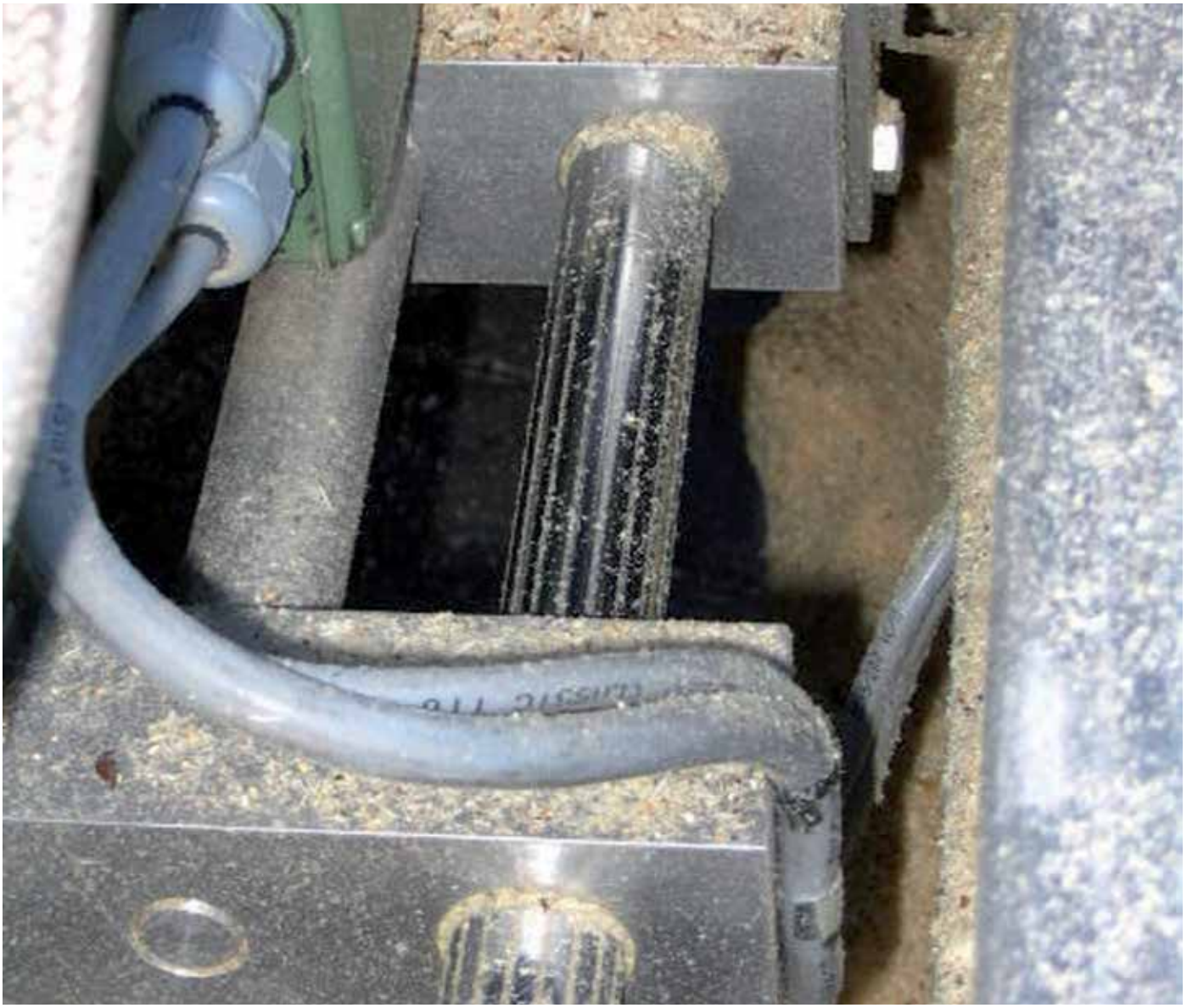

DryLin® in the roughest of environments

DryLin® - Application examples

Parting unit with talcum powder

Saw mill

Welding gun

Concrete cutting machine

Filling-shoe mechanism in a compaction unit

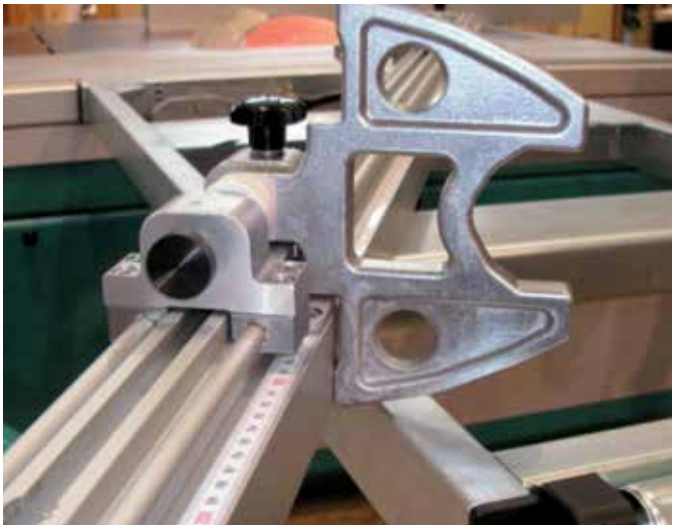

Stop dog system of a sliding table panel saw

Clean and hygienic

DryLin® linear guides work with plastic sliding elements instead of traditional ball bearings. These sliding elements are made of iglide® high performance plastic compounds which have solid lubricants embedded within the material. Compared to ball bearing guides, this enables operation without the need for external lubrication, and guarantees that machinery and manufactured products will not be contaminated by oil or grease.

Typical industries and application areas

● Automation ● Automotive manufacture and design ● Electronics ● Film and stage applications ● Food production ● Medical products ● Furniture and industrial design ● Test engineering and quality assurance ● Cleanroom equipment ● Packaging machines ● Lab automation

Vacuum pressure casting machine with DryLin® W feeder

DryLin® - Application examples

Fitness equipment: Seat height adjustment for bench press

Adjustment of kitchen worktop

Beverage can emptying device

Exercise machine

Vending machine

Filling system

Corrosion and chemical resistance

Some parts of the DryLin® linear bearing range are offered in various stainless steels such as 304 (1.4301), 303 (1.4305), 316 (1.4571), CF-A8 (1.4408). These soft stainless steels are chemically resistant materials and can be used with multiple iglide® bearing materials such as E7, J or T500 as linear guide systems.

Typical industries and application areas

● Food processing and packaging ● Marine ● Pharmaceutical filling

Blister machine/packaging technology

DryLin® - Application examples

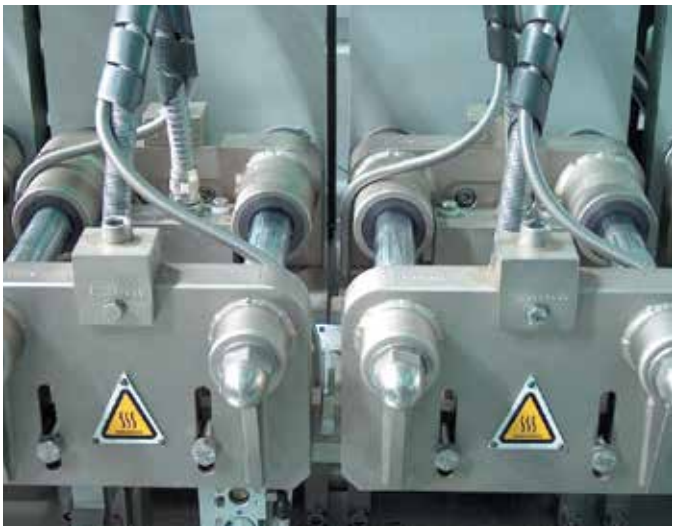

Form-fill-seal machine

Steering systems on bus trailers

Plant for the manufacture of die-casting molds

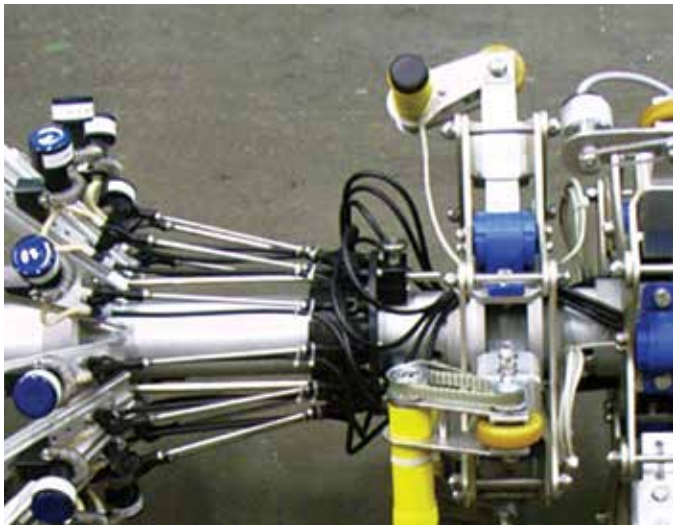

Offshore drilling riser

Leather splitting machine

Pouch packing machine

6. DryLin®..

Linear technology-

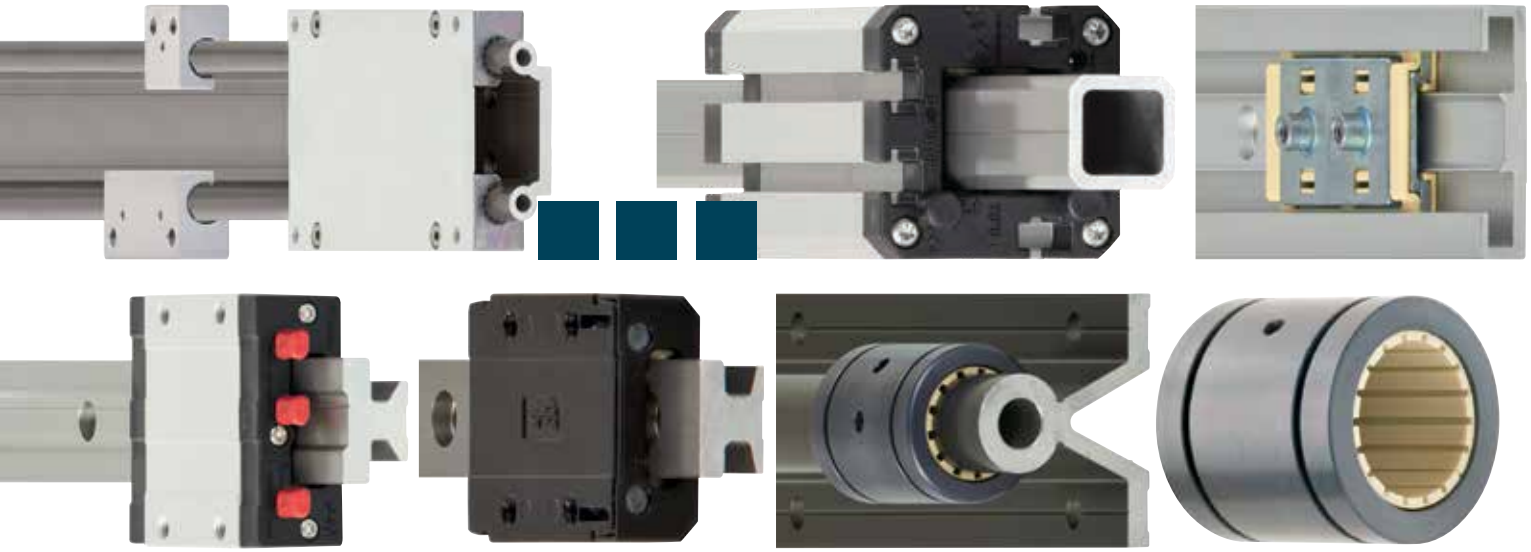

...plastics

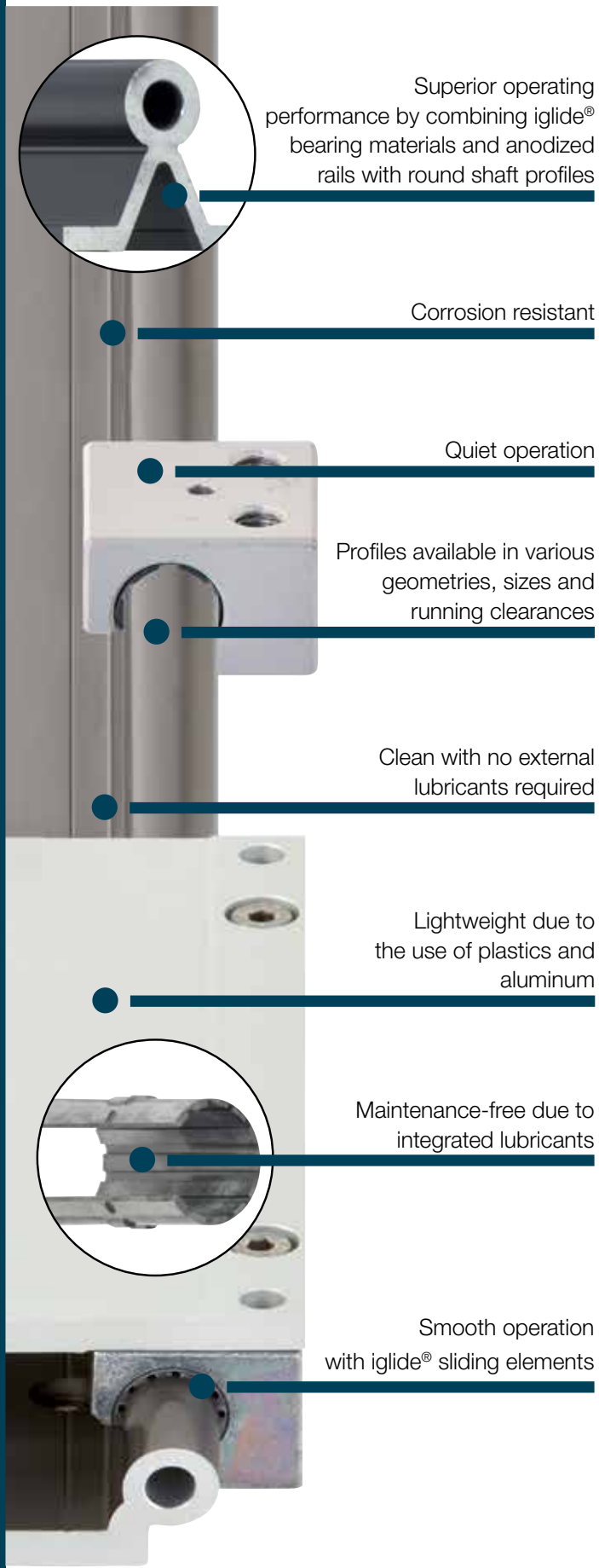

Maintenance-free DryLin® linear guide systems

DryLin® is a range of maintenance-free, self-lubricating linear slide bearings consisting of four main product lines. Principal features, in addition to zero maintenance, are strength and resistance to external influences such as corrosion, moisture, chemicals, heat and impact.

- Self-lubricating and resistant to dirt
- High static load capacity
- Light, quiet and clean
- Robust and low priced

Typical application areas:

- Machine design
- Packaging
- Lab automation
- 3D printers
- Medical devices

Lifetime calculation online
➤ www.igus.com/DryLin-expert

Price breaks online
No minimum order value.

Available from stock
Detailed information about delivery time online.

DryLin® linear technology - Advantages

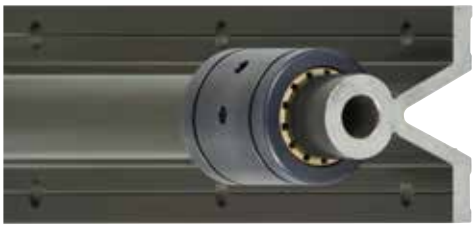

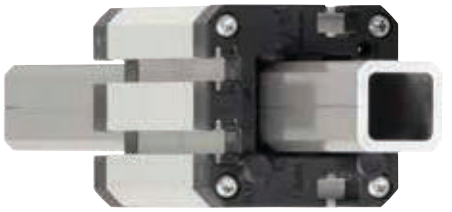

DryLin® rail guide systems

DryLin® W profile guides
- Modular design offers flexible design configurations
- Low cost
- 316 stainless systems available
- Double rail eliminates the need for shaft alignment
- Easy to assemble

➤ **Page 911**

DryLin® N low-profile guide systems
- Low profile for tight design constraints
- Low cost
- No external lubrication needed
- Preloaded systems available for reduced clearance

➤ **Page 951**

DryLin® T rail guide systems
- Low cost alternative to ball bearing profile systems
- Dimensionally interchangeable with ball bearing system
- No external lubrication or maintenance required
- Adjustable clearance standard on some series
- Lightweight
- Corrosion-resistant

➤ **Page 971**

DryLin® round shaft guides

DryLin® R round shaft guides
- Low cost alternative to recirculating ball bearings
- Dimensionally interchangeable with ball bearings and PTFE-lined systems
- Replaceable liners
- Corrosion-resistant
- Works on many shaft materials, even aluminum and 300-series stainless steel

➤ **Page 995**

DryLin® Q square linear guides
- Maintenance-free, torque resistant square linear guides
- Lightweight profiles made from hard-anodized aluminum
- Manual adjustable carriages with/without manual clamp
- Can be used on industry standard construction profiles

➤ **Page 1119**

Other DryLin® linear bearing systems
- Measurement systems

➤ **Page 1129**

- Stainless steel solutions

➤ **Page 1139**

DryLin® linear technology - Product selection

Properties	Size	Self-lubricating and quiet	Same dimensions as ball bearings	Profile rails	Round shafts	Square profiles	Single housing bearing	Complete carriage	Hybrid linear bearing sliding and rolling
DryLin® W	5	●		●			●	●	●
DryLin® N	4	●		●				●	
DryLin® Q	3	●				●	●	●	
DryLin® T	4	●	●	●				●	
DryLin® T mini	4	●	●	●				●	
DryLin® R	12	●	●		●		●		

Special criteria	Loads > 100 kg	For robust requirements	Resistant to dirt	Compact, space saving	Particularly light weight	Torque resistant	Torsionally stable	Unsupported installation
DryLin® W	+	+	++	+	+	+	++	+
DryLin® N			+	++	++	+		
DryLin® Q			+	+	+	++	+	++
DryLin® T	+	+	+			+	+	
DryLin® T mini			+	++	++	+		
DryLin® R	++	++	++					+

Technical options	Manual adjustable bearing clearance	Automatic adjustable bearing clearance	Automatic preload	Floating bearing function	Manual clamp	with measuring system	with lead screw drive	with timing belt drive
DryLin® W	+			+	+	+	+	+
DryLin® N			++	+	+		+	
DryLin® Q	+				+	+		
DryLin® T	+	+		+	+			
DryLin® T mini	+			+			+	
DryLin® R				+			+	

Application areas	Stainless steel components	Temperatures above 194°F (90°C)	Chemical resistant	FDA compliant	Cleanroom and ESD	Door/control panel adjustments	Camera slider	3D-print components
DryLin® W	++	++	++	++	+	++	++	++
DryLin® N		+			+	+	+	++
DryLin® Q					+			
DryLin® T		+			++			
DryLin® T mini					+	+		++
DryLin® R	++	++	++	++	+			++

+ suitable ++ particularly suitable

DryLin® linear technology - Online tools

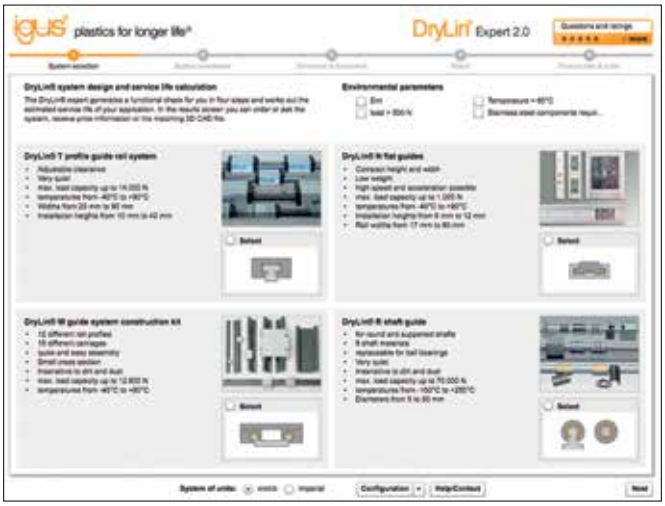

DryLin® expert - 2.0 system selections & service life calculation with CAD

A number of online tools, including configurators and service life calculators are available for DryLin® linear systems. Calculate required drive force and other technical details, and get direct access to CAD files and online ordering.

➤ **www.igus.com/drylin-expert**

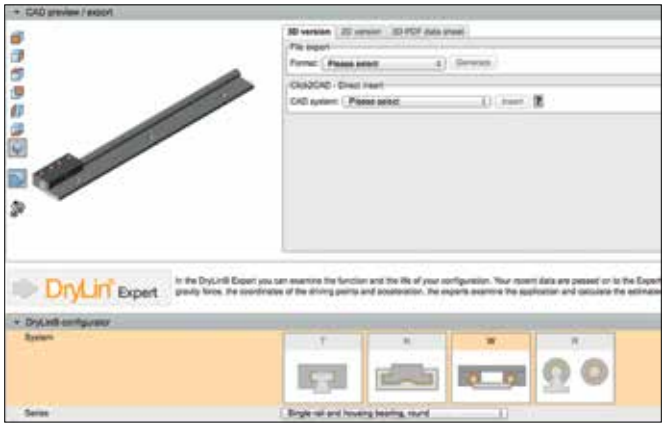

DryLin® CAD configuration

Generate complete 3D models for DryLin® linear technology according to your specifications

The igus® CAD configurator gives your the ability to design and save your linear guide system, individual components directly as a 3D model in all commonly used formats, or have them sent via email - No costs or registration required.

➤ **www.igus.com/DryLin-CAD**

DryLin® linear technology - Design rules

Static Load Capacity

Since there is no point-to-point contact with DryLin®, as there is with ball bearing systems, the static load capabilities of DryLin are extremely high. At the right find the maximum static load for the largest bearing in each series:

Dynamic Load Capacity

The dynamic load capacity is related to the continuous application speed as shown in the graph, this is due to the pv value of the iglide® J material. The lower the surface speed, the higher the permissible dynamic load. Our available Online Expert System quickly and easily checks the functionality of a particular DryLin® system for your application, and is available at www.igus.com. It will give warning if the load capacity of a certain bearing is exceeded.

Series	Max Static Load
DryLin R	20,000 lbs
DryLin T	3,140 lbs
DryLin W	719 lbs
DryLin N	220 lbs

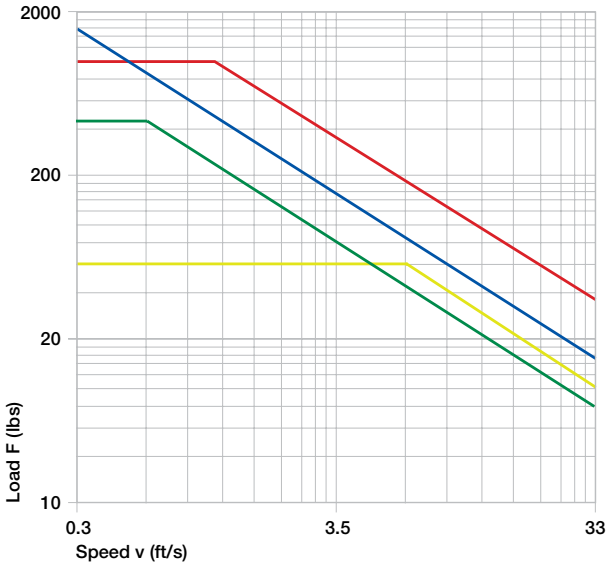

F x V values of comparable DryLin® systems

Permissible Speeds

With low loads DryLin® has been tested at speeds up to 49 fps (15 m/s). The maximum permissible speed is related to the bearing load - the lower the load the higher the permissible speed. Since DryLin® does not rely on complicated rolling elements, but instead on specially engineered, low wear, low friction glide strips, extremely high speeds and accelerations are now possible. This means that DryLin® is ideal for applications where cycle and accelerations must be increased.

More significant than the maximum speed is the average speed-per-cycle time. Therefore, in order to calculate the suitability of a particular DryLin® system, the average surface speed should be determined. In applications with intermittent cycles, the highest average surface speed is significant; this is an average taken over a 10-30 minute time period

The use of DryLin® S hard anodized aluminum as a shaft material decreases the operating temperature in the bearing system due to its thermal conductivity and micro-finish. It is recommended for most applications with short-strokes or high cycles when using the iglide® J/J200 material liners. It is the material we have designed for use with all of our profile guides as well.

Eccentric Forces

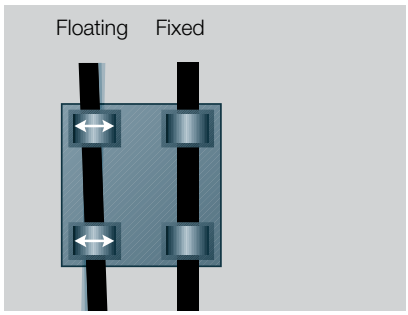

Figure 02: Automatic compensation of parallelism errors

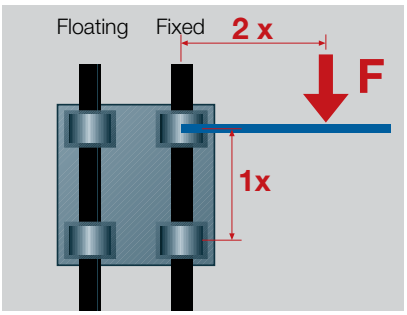

Figure 03: The 2:1 rule

The 2:1 Rule

When using linear plain bearings it is important to ensure that the acting forces follow the 2:1 Rule (see drawing). If either the load or the drive force (F) is greater than twice the bearing length (1X), then a binding or interrupted motion may occur. If the location of the drive force or load cannot be changed, simply increase the distance between the bearings, or create a counterbalance to move the center-of-gravity back within the 2 to 1 ratio.

DryLin® linear technology - Design rules

Fixed and Floating Bearing Mounting Instructions

When using systems with 2 parallel rails, one side must be designated as the “fixed” rail, and the opposite side as the “floating” rail.

Why use floating bearings?

- promotes smooth gliding performance and maximizes bearing life
- prevents binding caused by parallelism and angle errors
- decreases necessary drive force and wear by minimizing friction-forces
- Enhances the precision of the system over the bearings’ lifetime.
- Reduce assembly time and cost

Fixed Bearings

The “fixed” bearing rail should be positioned closest to the drive force. This rail will determine the precision of the system; no system should contain more than two “fixed” bearings.

Floating/Self-Aligning Bearings

The “floating” rail should be the rail located furthest from the drive force. It is to act only as a guide, and will compensate for any misalignments or angle errors in the system ensuring proper functionality.

Mounting Surfaces

The mounting surfaces for rails and bearings should have a very flat surface (e.g milled surface) in order to enhance performance. Variations in these surfaces may be compensated for by using floating bearings.

DryLin® N - Floating Systems

Maximum float = .02” (.5 mm)

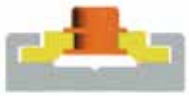

Standard Version

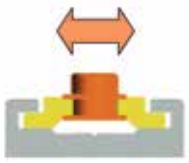

Horizontal Float “LLZ”

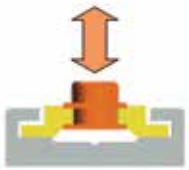

Vertical Float “LLY”

DryLin® W - Floating Systems

Maximum float = .08” (2 mm)

Standard Version

Horizontal Float “LLZ”

Vertical Float “LLY”

DryLin® W can also alleviate edge pressure Ideal for non-flat, even surfaces

DryLin® T - Floating Systems

Maximum float = .04” (1 mm)

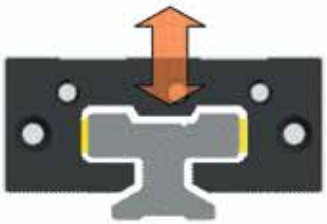

DryLin® linear technology - Design rules

DryLin® R

DryLin® R linear plain bearings in the 03 Design Series are self-aligning and offer great advantages in applications with parallel shafts. They are able to compensate for alignment and parallelism errors and should be used on the shaft located furthest from the drive mechanism.

The design provides a raised spherical area on the outer diameter of the aluminum adapter for self-alignment. Load capacity is the same as the fixed version.

Even in unfavorable edge-load conditions, the load is supported by the entire projected surface.

In order to compensate for parallelism errors between two shafts, the outer diameter is designed to be smaller than the housing bore diameter by 0.2 - 0.3 mm (depending on the size). With the use of mounted O-rings, these bearings have an elastic bearing seat.

Compensation for angle errors

Series RJUI/RJUM/OJUI/OJUM-03 ±0.5°
Series RJUM-06-LL/OJUM-06-LL ±3.5°

Compensation of parallelism errors

Series RJUI/RJUM/OJUI/OJUM-03 ±0.1 mm (.004")
Series RJUM-06-LL/OJUM-06-LL ±3 mm (.12")

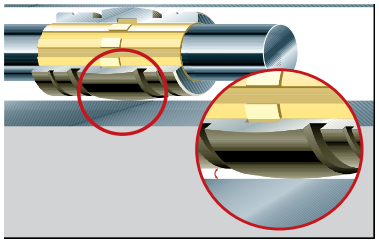

The spherical DryLin® adapters can compensate for alignment errors. A hard-anodization protects the aluminum adapter from wear.

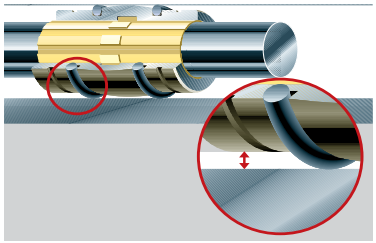

With built in clearances and the use of O-rings, the self-aligning DryLin® R bearings of the 03 Design Series can compensate for parallelism errors.

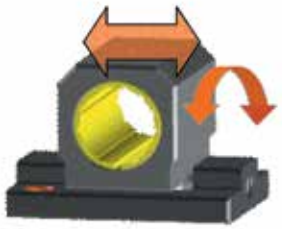

The self-aligning DryLin® R bearings of the 06 LL design series can compensate parallelism errors up to ± .12" (3mm).

DryLin® T Shown As Example Only

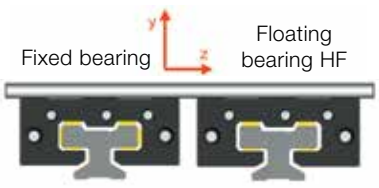

Installation variation horizontal with floating bearing in the Z-direction

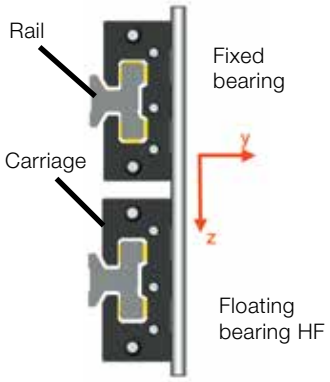

Installation variation lateral with floating bearing in the Z-direction

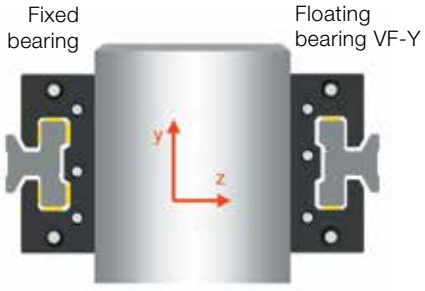

Horizontal mounting version with floating bearing in the Y-direction and lateral mounting carriage

Cleanroom suitability and ESD compability of DryLin®

DryLin® linear guides by igus®

All DryLin® guide systems are clearly qualified for clean room applications. The differentiation between the various clean room classes is only dependent on load and speed of the application. The combination of iglide® J and hard anodized aluminum is classified as level 1 in the ESD compatibility according to SEMI E78-0998 (Highest rank).

The following DryLin® guides from igus® were tested: N40, W10, T25 and T30. See below for detailed results.

Linear guide system DryLin® TK-10-30-01
"For the linear guide system DryLin® TK-10-30-01 by igus® GmbH, it is possible, on the calculations of the likelihood of violation of threshold values of the detection sizes 0.2 µm, 0.3 µm, 0.5 µm, and 5 µm with motion speed of v = 0.1 m/s, to clearly derive suitability for clean rooms classified as ISO Class 3 according to DIN EN ISO 14644-1."

Linear guide system DryLin® NK-02-40-02
"For the linear guide system DryLin® NK-02-40-02 by igus® GmbH, it is possible, on the calculations of the likelihood of violation of threshold values of the detection sizes 0.2 µm, 0.3 µm, 0.5 µm, and 5 µm with motion speed of v =1 m/s, to clearly derive suitability for clean rooms classified as ISO Class 6 according to DIN EN ISO 14644-1."
The measurement results of the ESD compatibility according to SEMI E78-0998 show that the linear guide system DryLin® NK-02-40-02 can be classified as "level 1" (Highest rank). See Fraunhofer IPA Report No.: IG 0308-295 73.

IPA Fraunhofer TESTED® DEVICE
igus Energieführungsketten/ Lineargleitführung
Report No. IG 0308-295

Linear guide system DryLin® TK-01-25-02
"For the linear guide system DryLin® TK-01-25-02 by igus® GmbH, it is possible, on the calculations of the likelihood of violation of threshold values of the detection sizes 0.2 µm, 0.3 µm, 0.5 µm, and 5 µm with motion speed of v =1 m/s, to clearly derive suitability for clean rooms classified as ISO Class 5 according to DIN EN ISO 14644-1."
The measurement results of the ESD compatibility according to SEMI E78-0998 show that the linear guide system DryLin® TK-01-25-02 can be classified as "level 1" (Highest rank).

Linear guide system DryLin® WK-10-40-15-01
"For the linear guide system DryLin® WK-10-40-15-01 by igus® GmbH, it is possible, on the calculations of the likelihood of violation of threshold values of the detection sizes 0.2 µm, 0.3 µm, 0.5 µm, and 5 µm with motion speed of v =1 m/s, to clearly derive suitability for clean rooms classified as ISO Class 6 according to DIN EN ISO 14644-1."
The measurement results of the ESD compatibility according to SEMI E78-0998 show that the linear guide system DryLin® WK-10-40-15-01 can be classified as "level 1" (Highest rank).
See Fraunhofer IPA Report No.: IG 0308-295 74.

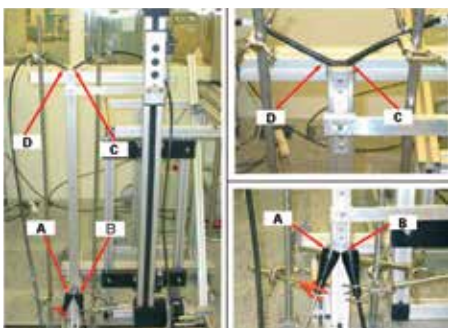

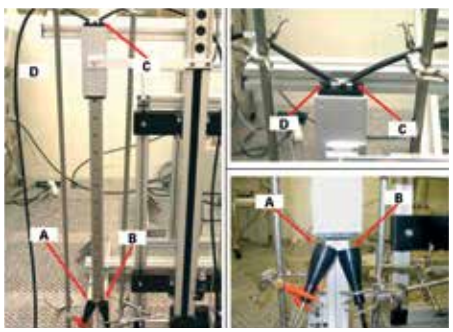

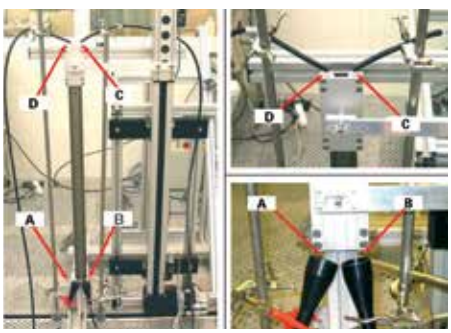

DryLin® linear technology - Product overview

DryLin® W Profile Guides

WSQ
Single rail
square

➤ Page 920

WJ200-QM
Housing
square

➤ Page 921

WS
Single rail
round

➤ Page 922

WJ200UM
Housing bearing
round

➤ Page 923

WJ200UMT
Housing bearing
Twin, round

➤ Page 924

WJUME
Housing
adjustable, round

➤ Page 925

DryLin® W Profile Guides

WSX
High profile
hollow rail

➤ Page 933

WW
Guide carriage
assembly, round

➤ Page 934

WSQ / WS-CAM
Double rail
lightweight

➤ Page 935

Slider-Rail
3/8 Inch connections

➤ Page 936

WHKA
Manual clamp

➤ Page 937

WHKD
Manual clamp
high holding forces

➤ Page 938

DryLin® N low-profile guide systems

NS-01-17
Rails
size 17

➤ Page 959

NW-...
Carriages
size 17

➤ Page 959

NS-01-27
Rails
size 27

➤ Page 961

NW-...
Carriages
size 27

➤ Page 961

NS-01-40
Rails
size 40

➤ Page 963

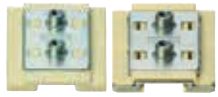

NW-...
Carriages
size 40

➤ Page 963

DryLin® T rail guide systems

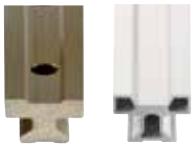

TS
Linear rail guide
and hollow linear rail

➤ Page 978

TWA
Guide carriage
automatic clearance
adjustment

➤ Page 979

TW-01
Guide carriage
manual adjustable
clearance

➤ Page 980

TW-01-...-HKA
Guide carriage
with manual clamp

➤ Page 981

TW-02
Guide carriage
Heavy Duty

➤ Page 982

TW-03
Guide carriage
compact

➤ Page 983

DryLin® R Round shaft guides - Inch

JUI / JUIO Liner
made from iglide® J
open/closed
Standard (-01)
Low clearance (-20)

➤ Page 1004

J200UI
J200UIO Liner
made from iglide® J200
open/closed
Standard (-01)

➤ Page 1008

E7UI / E7UIO Liner
made from iglide® E7
open/closed
Standard (-01)

➤ Page 1010

TUI / TUIO
(XUI / XUIO) Liner
made from iglide® T500 (X)*
open/closed
Standard (-01)

➤ Page 1012

RJI / RJIP
made from iglide® J
RJI - standard,
RJIP - Low clearance

➤ Page 1014

RJUI
Closed anodized
aluminum adapter
Standard (-01)
Low clearance (-21)
Self aligning (-03)

➤ Page 1016

Rail and housing
316 stainless steel
single/double

➤ Page 926

WSQ
Double rail
square

➤ Page 928

WSX
High profile rail
square and hollow

➤ Page 929

WW-06
Guide carriage
fitted square
assembly

➤ Page 930

WWC
Mono-slide carriage
Guide carriage
square

➤ Page 931

WS
Double rail
round

➤ Page 932

DryLin® W hybrid bearings rolling and sliding elements

WJRM-01
Hybrid bearing

➤ Page 946

WJRM-21
Hybrid double roller
bearing

➤ Page 947

WWR-...-15
Hybrid carriage
long design

➤ Page 948

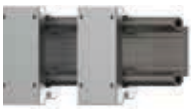

WWR-...-01
Hybrid carriage
short design

➤ Page 948

WWH
Hybrid carriages for
horizontal installation

➤ Page 949

NS-01-80
Rails
size 80

➤ Page 965

NW-...
Carriages
size 80

➤ Page 965

NT-...
Telescopic rails
with/without detent
function

➤ Page 966

NW-...HKA
Manual clamp
size 27

➤ Page 968

NSK
End caps for guide rails

➤ Page 969

TS-04
Miniature rail

➤ Page 984

TW-04
Miniature guide
carriage

➤ Page 984

TWE-04
Miniature guide
carriage adjustable
clearance

➤ Page 985

TWBM-11
Manual clamp
compact design

➤ Page 986

TWBM-01
Manual clamp
solid design

➤ Page 986

RJ200UI
Closed anodized aluminum
adapter - iglide® J200 liner
For aluminum shafting
Standard (-01)
Self aligning (-03)

➤ Page 1019

RE7UI
Closed anodized
aluminum adapter
For steel shafting
Standard (-01)
Self aligning (-03)

➤ Page 1021

RJUI-ESR
Closed stainless
steel adapter
Standard (-01)
Self aligning (-03)

➤ Page 1023

TJUI
Split, anodized
aluminum adapter
Standard (-01)
Low clearance (-21)
Self aligning (-03)

➤ Page 1025

TE7UI
Split, anodized
aluminum adapter
iglide® E7 liner
Standard (-01)
Self aligning (-03)

➤ Page 1028

OJUI
Open anodized
aluminum adapter
Standard (-01)
Low clearance (-21)
Self aligning (-03)

➤ Page 1030

DryLin® linear technology - Product overview

DryLin® R Round shaft guides - Inch

OE7UI
Open anodized aluminum adapter
For steel shafting
Standard (-01)
Self aligning (-03)

➤ Page 1033

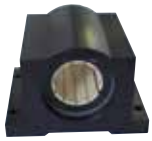

RJUI-XX
Closed pillow block
Standard (-11)
Low clearance (-13)
Self aligning (-31)

➤ Page 1036

OJUI-XX
Open pillow block
Standard (-11)
Low clearance (-13)
Self aligning (-31)

➤ Page 1037

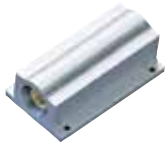

RJUI-XX-TW
Closed pillow block
Twin design
Standard (-11)
Low clearance (-13)
Self aligning (-31)

➤ Page 1038

OJUI-XX-TW
Open pillow block
Twin design
Standard (-11)
Low clearance (-13)
Self aligning (-31)

➤ Page 1039

FJUI-XX
Flanged pillow block
Square
Standard (-11)
Low clearance (-13)
Self aligning (-31)

➤ Page 1040

DryLin® R Round shaft guides - Metric

JUM / JUMO Liner
made from iglide® J
open/closed long (-01)
Low clearance (-20)

➤ Page 1042

JUM / JUMO Liner
made from iglide® J
closed design,
Short (-02)
Low clearance, (-22)

➤ Page 1046

J200UM
J200UMO Liner
made from iglide® J200
open/closed
Standard (-01)

➤ Page 1048

E7UM / E7UMO Liner
made from iglide® E7
open/closed
Standard (-01)

➤ Page 1050

TUM / TUMO
(XUM / XUMO) Liner
made from iglide® T500 (X)*
open/closed
Standard (-01)

➤ Page 1052

TUM / TUMO
(XUM / XUMO) Liner
made from iglide® T500 (X)*
open/closed
Short design (-02)

➤ Page 1054

DryLin® R Round shaft guides - Metric

RJ260UM
Low-cost
compact bearing

➤ Page 1066

RJUM-ES
Closed stainless
steel adapter
Standard (-01)
Self aligning (-03)

➤ Page 1067

TJUM-01
Split anodized
aluminum adapter
Standard (-01)
Low clearance (-21)
Self aligning (-03)

➤ Page 1068

OJUM
Open anodized
aluminum adapter
Standard (-01)
Low clearance (-21)
Self aligning (-03)

➤ Page 1071

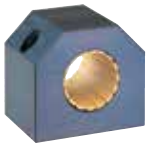

RJUM
Housing bearing
closed, short design
Standard (-05)
Low clearance (-35)

➤ Page 1074

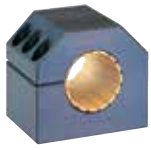

RJUME
Housing bearing
adjustable, short design
Standard (-05)
Low clearance (-35)

➤ Page 1075

DryLin® R Round shaft guides - Metric

OJUM-LL
Floating housing bearing
Open, Standard (-06)
Low clearance (-36)

➤ Page 1082

FJUM-01/-31
Flange housing
round flange
Standard (-01)
Low clearance (-31)

➤ Page 1083

FJUM-02/-32
Flange housing
square flange
Standard (-02)
Low clearance (-32)

➤ Page 1084

FJUMT-01
Flange housing
twin design
round

➤ Page 1085

FJUMT-02
Flange housing
twin design
square

➤ Page 1086

FJUMT-02
Flange housing
twin design
square

➤ Page

DryLin® R Round shaft guides

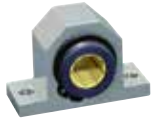

RGAS
Linear housing
short, closed design

➤ Page 1094

OGAS
Linear housing
short, open design

➤ Page 1095

FJUI-XX-TW
Flanged pillow block
Square, twin design
Standard (-11)
Low clearance (-13)
Self aligning (-31)

➤ Page 1041

FJUIT
Flanged pillow block
Round, twin design

➤ Page 1041

RSDJ
Slide disk

➤ Page 1055

RJM / RJMP
made from iglide® J
RJM - standard,
RJMP - Low clearance

➤ Page 1056

RJUM
Closed anodized
aluminum adapter
Standard (-01)
Low clearance (-21)
Self aligning (-03)

➤ Page 1058

RJUM-02 (-22)
Closed anodized
aluminum adapter
Short design (-02)
Low clearance (-22)

➤ Page 1061

RJ200UM
Closed anodized aluminum
adapter - iglide® J200 liner
For aluminum shafting
Standard (-01)
Self aligning (-03)

➤ Page 1062

RE7UM
Closed anodized
aluminum adapter
For steel shafting
Standard (-01)
Self aligning (-03)

➤ Page 1063

TJUM-05
Housing bearing
split, screwed
short design
Standard (-05)
Low clearance (-35)

➤ Page 1076

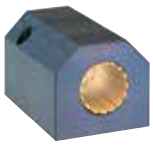

RJUMT
Housing bearing
closed, short
twin design

➤ Page 1077

RJUM-06
Housing bearing
closed
long design
Standard (-06)
Low clearance (-36)

➤ Page 1078

RJUM-LL
Floating housing bearing
closed
Standard (-06)
Low clearance (-36)

➤ Page 1079

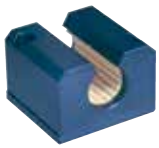

OJUM-06
Housing bearing
open, long design
Standard (-06)
Low clearance (-36)

➤ Page 1080

OJUME
Housing bearing
open, adjustable,
long design
Standard (-06)
Low clearance (-36)

➤ Page 1081

RQA
Quad Block
closed design

➤ Page 1088

OQA
Quad block
open design

➤ Page 1089

RTA
Tandem housing
closed design

➤ Page 1090

OTA
Tandem housing
open design

➤ Page 1091

RGA
Linear housing
long, closed design

➤ Page 1092

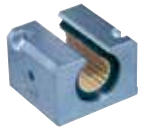

OGA
Linear housing
long, open design

➤ Page 1093

DryLin® linear technology - Product overview

DryLin® Shafting

AWM
Precision aluminum shafts, optionally supported

➤ Page 1102

SWM
Steel shafts, optionally supported

➤ Page 1104

EWM
Stainless steel shafts, optionally supported

➤ Page 1106

CWM
Carbon fiber shaft

➤ Page 1110

TA/TAF
Shaft end supports, fixed/floating

➤ Page 1111

WA/WAC/
WAS / WAF
Shaft blocks with/without flange

➤ Page 1113

DryLin® Q square linear guides

AWMQ
Square section tubes

➤ Page 1122

QWE
Bearing carriage
adjustable

➤ Page 1123

QWE-...-HKA
Bearing carriage
adjustable with hand clamp

➤ Page 1124

QJRMT
Q20 pillow block

➤ Page 1125

QJFM(T)
Flange pillow block

➤ Page 1126

QJRMP
Q10 pillow block

➤ Page 1127

DryLin® Q square linear guides

Accessories
Supports made from plastic, end caps for section rail, linear construction kit

➤ Page 1128

DryLin® Digital measuring system

QKM
Measuring system DryLin® Q

➤ Page 1134

SLWM
Measuring system DryLin® SLW

➤ Page 1135

WKM-10/-20
Measuring system

➤ Page 1136

WKM-11
Measuring system

➤ Page 1136

WKMED
Measuring system DryLin® W

➤ Page 1137

WKMEX
Measuring system

➤ Page 1138

DryLin® Stainless steel

RJUI-ESR/RJUM-ES
Closed stainless steel adapter
Standard (-01)
Self aligning (-03)

➤ Page 1141

DryLin® W
Guide rail, single/double and housing bearing

➤ Page 1143

EWM
Stainless steel shafts, optionally supported

➤ Page 1146

SLW-ES
Stainless steel

➤ Page 1150

HTSC-HYD
Hygienic Design

➤ Page 1151

SLW-XY-ES
XY-table, compact stainless steel

➤ Page 1152

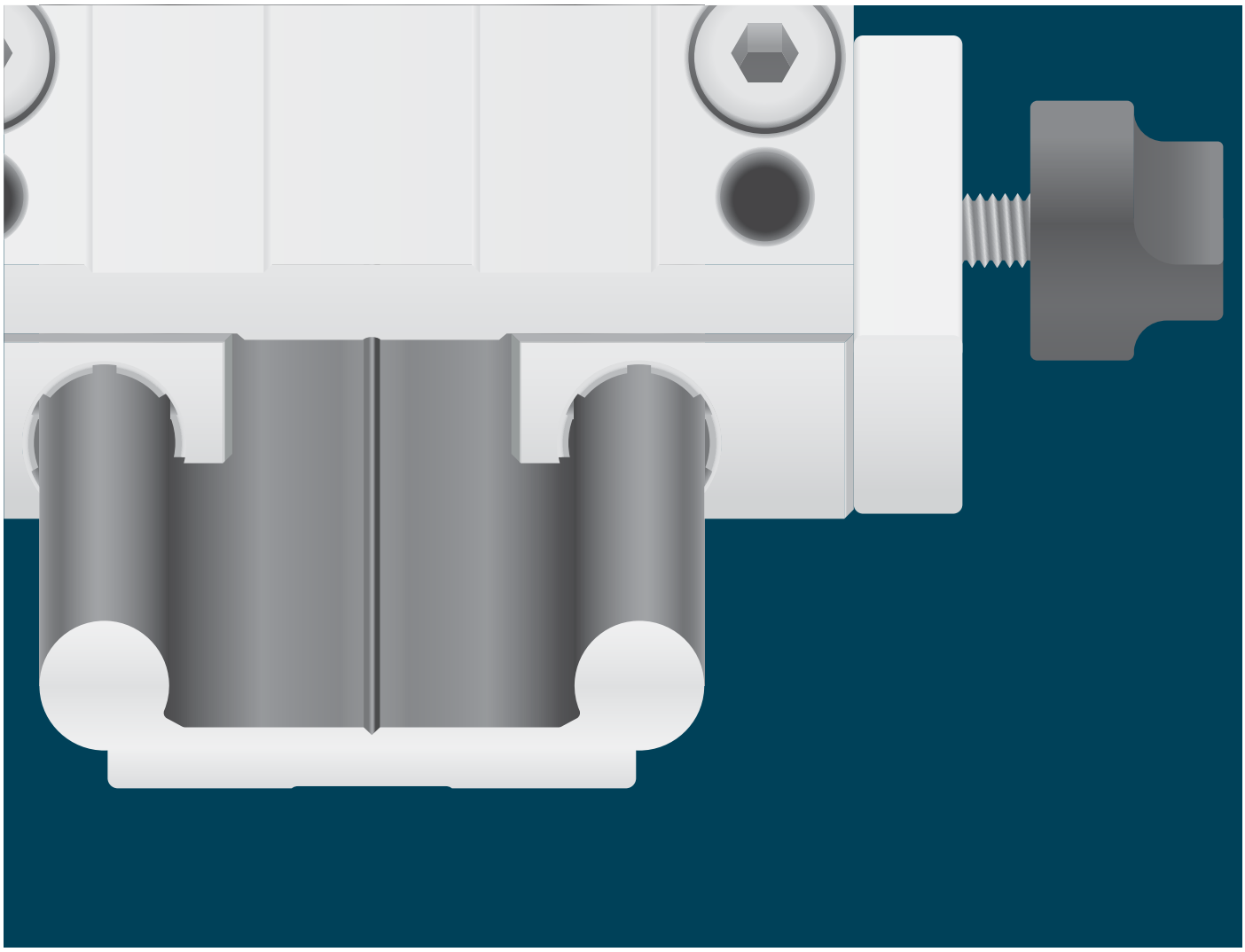

DryLin® W Toolkit

- Easy Installation
- Dry running operation
- Variable carriage lengths
- Different rail widths available
- Low-profile
- Corrosion-free

DryLin® W - Profile Guides - Toolkit

Self-lubricating, light, quiet, long service life, low-cost

Tribologically-optimized systems with iglide plastic bearing liners and anodized aluminum profiles

Corrosion resistant

Quiet operation

Clean, no external lubrication is required

Lightweight through the use of plastics and aluminum

Low friction iglide® J200 and iglide® J performance plastics

Maintenance free

Profiles with various geometries, installation sizes and clearances

Self-lubricating linear system - DryLin® W

DryLin® W was developed to promote both design flexibility and quick assembly in both single and double rail configurations. DryLin® W is also available in several mounted assemblies eliminating the need for both shaft alignment and bearing assembly. All DryLin® W systems are available with our enhanced J200 liners, which reduce friction and optimize bearing life.

- Easy installation, maintenance-free
- Resistant to dirt due to dry operation
- Lightweight and quiet
- Bearings with manual clearance adjustment available
- Available in 316 SS versions

Online product finder
➤ **www.igus.com/drylin-finder**

max. **+392°F (200°C) depending on material**
min. **–40°F (-40°C)**

Carriage lengths: **60-250 mm**
Carriage widths: **54-195 mm**
Rail length: **up to 4,000 mm**

Detailed technical data
➤ **www.igus.com/drylinW**

Available from stock
Detailed information about delivery time online.

DryLin® W - Profile Guides - Product overview

Component parts:
Single rails and bearings

- Liners made from iglide® J200/J/T500/E7/A180
- Housings made from die-cast zinc, aluminum or stainless steel
- Turn-to-fit function for clearance adjustment optional
- Rail material: hard-anodized aluminum or stainless steel (316L)
- Single rails for optimum design flexibility (individual/parallel/ diagonal designs possible)
- The hard anodize surface of DryLin® rails and shafts is integral to the tribology of the bearing system - therefor variations in color, and superficial crazing under the anodic layer may occur

➤ **Page 920**

Assembled systems:
Complete carriages and double-rail profiles

- Multiple carriage lengths and widths
- Pre-assembled carriages available
- One-piece carriages for quick assembly available
- Rail material: hard-anodized aluminum
- Rigid double-shaft profile
- Double rail guides reduce alignment and installation time
- Rail material: hard-anodized aluminum or stainless steel (316L)
- Turn-to-fit function for clearance adjustment optional

➤ **Page 930**

Accessories

- Manual clamp available
- End caps for select rails

➤ **Page 937**

Hybrid guides

- Combination rolling and sliding bearings
- Low driving forces - ideal for manual applications
- Bearing with single or double roll
- Suitable with DryLin® single and double rail profiles

➤ **Page 941**

Measurement systems based on DryLin® W

➤ **Page 1129**

Linear modules based on DryLin® W

- SLW, SAW, GRW, ZLW

➤ **Page 1261**

DryLin® W - Profile Guides - Application examples

DryLin® linear bearings enable precise positioning at high speeds, and do not require external lubrication like traditional bearings.

Low weight and quiet, precise movement, DryLin® bearings are used in a number of 3D printing applications.

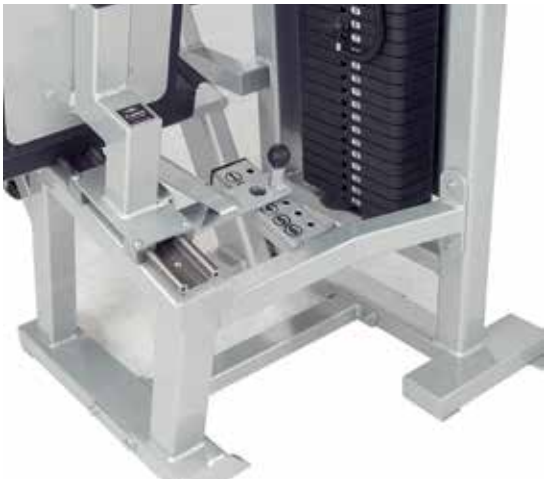

The adjustment mechanisms of fitness equipment require no maintenance when manufactured with DryLin® profile guides.

This casting machine's closing mechanism is subjected to high temperatures as well as dirt. To make the system as durable as possible despite these harsh conditions, it is equipped with a DryLin® W linear guide.

On this complex machine, the price advantage, coupled with resistance to dirt and dust were the customer's deciding factors for selecting DryLin® W.

Stage technology's requirements for quiet, low-vibration adjustment are enabled through the use of steel DryLin® W linear guide systems partnered with self-lubricating iglide® sliding elements.

DryLin® expert - 2.0 system selections & service life calculation with CAD

A number of online tools, including configurators and service life calculators are available for DryLin® linear systems. Calculate required drive force and other technical details, and get direct access to CAD files and online ordering.

➤ **www.igus.com/drylin-expert**

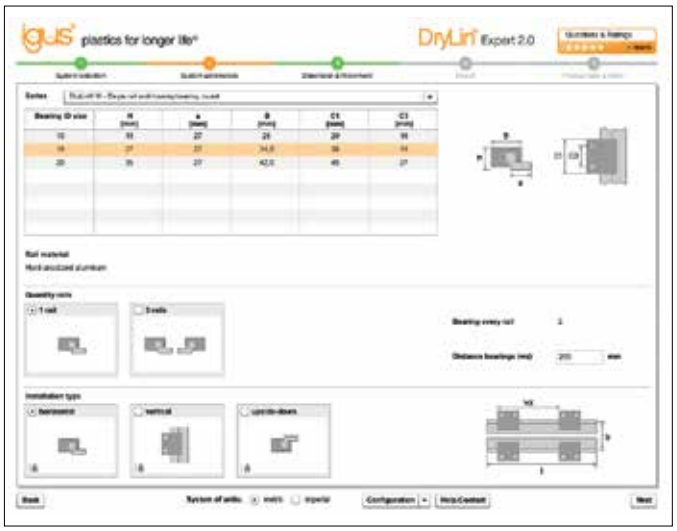

With the DryLin® expert 2.0 online tool, easily configure the right DryLin® system for your application, and calculate service life with only a few clicks. Enter relevant parameters and environmental factors, select the bearing size, carriage, position, and number. Next, enter the distance between the rails and mounting, define the coordinates for the drive location and center of gravity. Define the weight, required drive force, and distance of the bearing, and select the rail length, and select and order from the displayed results.

➤ **www.igus.com/drylin-expert**

The igus® CAD configurator gives you the ability to design and save your linear guide system, individual components directly as a 3D model in all commonly used formats, or to have them sent via email – No cost or registration required.

➤ **www.igus.com/drylin-CAD**

DryLin® W - Profile Guides - Product selection

Properties

	Size					Liner material				
	6	10	16	20	25	J	J200	T500 (X)	A180	E7
Housing bearing, round		●	●	●	●	●	●	●	●	●
Housing bearing, square	●	●	●	●			●			
Fitted carriage, round		●	●	●	●	●	●	●	●	●
Fitted carriage, square	●						●			
Mono-slide carriage	●	●	●	●		●				

● = Standard liner

Combinations

	Single rail		Double rail		High profile rail	
	square	round	square	round	square	round
Housing bearing, round		●		●		●
Housing bearing, square	●		●		●	
Fitted carriage, round				●		●
Fitted carriage, square			●		●	
Mono-slide carriage			●		●	

Bearings/carriages

	Housing material			Options				
	Zinc Die-cast	Aluminum	Stainless steel	Manual clamp	Clearance adjustment	Hybrid	Ø 10 mm slider	Floating bearing
Housing bearing, round	●	●	●	●	●	●		●
Housing bearing, square	●	●	●					●
Fitted carriage, round	●	●	●	●	●	●	●	●
Fitted carriage, square	●	●						●
Mono-slide carriage		●						

Rails

	Rail material			Fastening options		
	Aluminum	Stainless steel	Holes	Pre-drilled thread (3/8")	Clamping element	Slot nuts
Single rail, round	●	●	●			
Single rail, square	●		●			
Double rail, round	●	●	●	●		
Double rail, square	●		●			
High profile, round	●				●	●
High profile, square	●				●	●

Floating bearings for all directions compensate misalignments and parallelism errors

System Assembling: Rails

Fixed Floating

Fixed Floating

Fixed Floating

NOTE: Rail configuration not possible with WS-10 and WSQ-10, rail height is not equal

Floating bearings facilitate assembly – only necessary for individual rails.

Although DryLin® W is a profile rail system, it is able to compensate angular rotation errors about the x-axis. An angular adjustment of ±7° is possible. This effectively eliminates the problems known to occur when fitting to sheet metal.

Assembly is made even easier with the DryLin® WQ square profile. Floating bearings for all directions (±1 mm) compensate for misalignments and parallelism errors between rails. Reduces time-consuming parallel alignment of the system.

Available floating bearing blocks

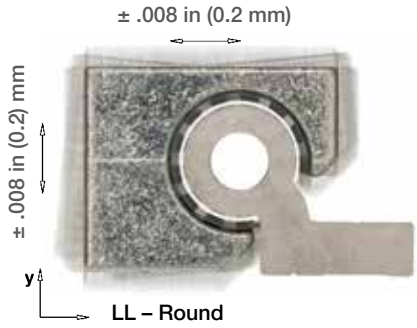

LL – Round

LLY – Angular

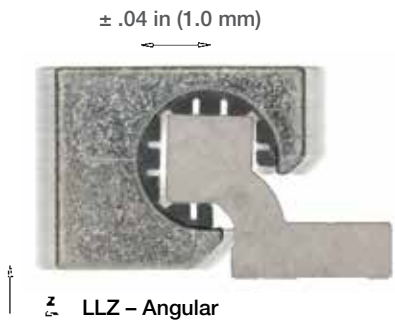

LLZ – Angular

Rotating – Angular

DryLin® W - Profile Guides - Liners

Self-lubricating iglide® high performance plastics

Low friction, low wear

Vibration dampening

Axial and radial locking features

Open geometric design for rapid assembly

Sliding surface structures with integrated rib design for dirt to pass through

Resistant to dirt

Axial retention

Corrosion resistant

DryLin® Liners made from high-performance plastics

DryLin® W profile guides are a cost-effective system, highly flexible in it's design and installation options, using single or double hard anodized aluminum rails, which provide the best friction and wear rates. With its self-lubricating operation, the DryLin® profile guide system is extremely resistant to dirt; its cleanliness also makes it suitable for use in cleanroom and other hygienic applications.

- Easy installation, maintenance-free
- Resistant to dirt and dust due to dry operation
- Lightweight and quiet
- Square rail with floating bearing function for 90° installation
- Manual clearance adjustment bearing available

Typical application areas:

- Agricultural machinery ● Vehicle construction
- Medical technology ● Facade construction
- Packaging industry ● Furniture ● Robotics
- Metal sheet cladding

	The "all-rounder" – iglide® J	The specialist – iglide® J200	The extreme – iglide® T500 (X)*	The marathon runner – iglide® E7	FDA compliant – iglide® A180
Optimal shaft material(s)	all shaft materials	Aluminum, hard anodized	Hardened stainless steel Hard chromed plated steel	Steel stainless steel shaft	all shaft materials
Application temperature	-40°F to +194°F (-40°C to +90°C)	-40°F to +194°F (-40°C to +90°C)	-148°F to +482°F (-100°C to +250°C)	-40°F to +194°F (-40°C to +90°C)	-40°F to +194°F (-40°C to +90°C)
Best coefficient of friction with	Steel shaft	Aluminum, hard anodized	Steel hard chrome-plated	Steel stainless steel shaft	Stainless steel shaft
Maximum life time	Aluminum, hard anodized	Aluminum, hard anodized	Hardened stainless steel	Steel stainless steel shaft	Stainless steel shaft
Permissible stat. surface pressure	35 MPa	23 MPa	150 MPa	18 MPa	28 MPa
Moisture absorption	1.3% weight	0.7% weight	0.5% weight	< 0.1% weight	0.2% weight
Volume resistance	> 10^{13} Ωcm	> 10^{8} Ωcm	< 10^{5} Ωcm	> 10^{9} Ωcm	> 10^{12} Ωcm
Part No.	JUM-...	J200UM-...	TUM-.../XUM-...	E7UM-...	A180UM-...

*X is the European equivalent material for iglide® T500

DryLin® W - Profile Guides - Liners

Available housing bearing & carriages	Suitable liners iglide® J	iglide® J200	iglide® T500 (X)*	iglide® E7	iglide® A180 (FDA Compliant)
Square bearing					
Standard		●			
Aluminum		●			
Round bearing,					
Standard	○	●	○	○	○
Stainless steel	●	○	○	○	○
Aluminum	○	●	○	○	○
Aluminum, tandem	○	●	○	○	○
"Turn to fit"	●				
Hybrid – roll and slide	●				
Guide carriage, fitted					
Standard, assembled, square		●			
Standard, assembled, round	●	●	○	○	○
Hybrid, round	●				
"Turn-to-fit", round	●				
Complete carriages					
One-piece square	●				

● = Standard ○ = Optional *X is the European equivalent material for iglide® T500

DryLin® W - Profile guides - Product range

Single rail, square, hard-anodized aluminum

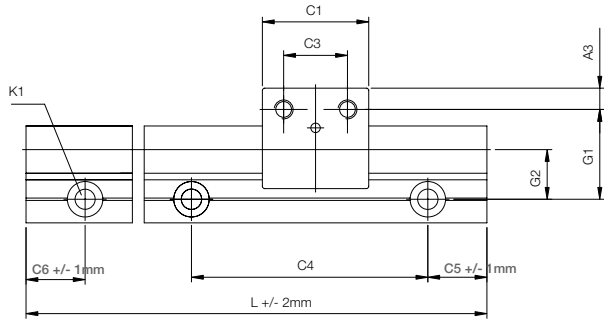

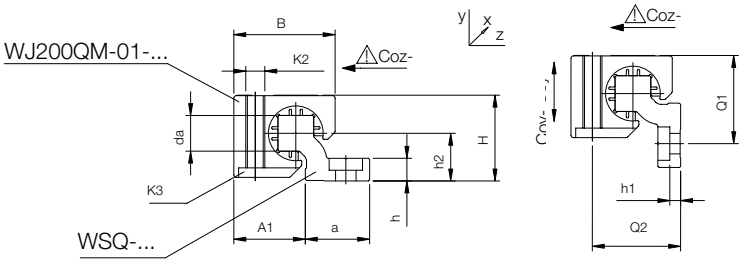

NOTE: The hard anodized surface of DryLin rails and shafts is integral to the tribology of the bearing system - therefore variations in color, and superficial crazing under the anodic layer may occur.

Hard anodized surfaces ➤ Page 888

Load data and dimensions [mm]

Part No.	Weight	H[57]	da	L	a	h	h1	h2	G1	G2	A1	Q1	Q2
	[kg/m]	±0.25	–0.1	max.									
WSQ-06	0.23	14	5	3,000	14	4	4[58]	7.5	18	10.5	13.5	17	15
WSQ-10	0.54	20	7.5	4,000	25	5.5	5.5[58]	11	27	17	18.5	26	21
WSQ-16	0.94	27	11.5	4,000	27	7.5	3.5	14	33	19	25	32	28
WSQ-20	1.41	36	15	4,000	27	9.5	4.5	20	38	21	30	37	37

Part No.	C4	C5 min.	C5 max.	C6 min.	C6 max.	K1 for screw DIN 912	Iy [mm⁴]	Iz [mm⁴]	Wby [mm³]	Wbz [mm³]
WSQ-06	60	20	49.5	20	49.5	M4[58]	2,200	640	220	100
WSQ-10	120	20	79.5	20	79.5	M6[58]	16,100	3,300	950	350
WSQ-16	120	20	79.5	20	79.5	M8	33,000	10,800	1,700	910
WSQ-20	120	20	79.5	20	79.5	M8	56,500	34,000	2,600	2,100

Standard hole pattern: C5 = C6, please order with drawing for C5 ≠ C6

[57] Height dimension minus the bearing clearance tolerance

[58] Non-counterbored holes

Can be combined with:

WJ200QM-...

DryLin® W - Profile guides - Product range

Bearing carriage, square, made from zinc or machined aluminum

Order key – single rail

Type	Length
WSQ	-06-3000

Guide rails	Square	Shafts-Ø	Rail length [mm]

Order key – housing bearing

Type	Size	Options
WJ200QM	-01-10	-LLY

DryLin® W	iglide® bearing material	Housing bearing, square	Quantity, bearings	Size	Floating bearing in y-direction

Options
LLY: Floating bearing in y-direction
LLZ: Floating bearing in z-direction
AL: Aluminum housing bearing

Load data and dimensions [mm]

Part No.	Floating bearing clearance	Floating bearing direction	Weight	B	C1	C3	A3	K2	K3	Stat. load capacity		
										Coy	Coz+	Coz–
			[g]							[N]	[N]	[N]
WJ200QM-01-06	–	–	16	18	19	10	4.5	M4	M3	420	420	140
WJ200QM-01-06-LLZ	± 0.5	z	16	18	19	10	4.5	M4	M3	420	420	140
WJ200QM-01-06-LLY	± 0.5	y	16	18	19	10	4.5	M4	M3	420	420	140
WJ200QM-01-06-AL	–	–	8	18	19	10	4.5	M4	M3	420	420	140
WJ200QM-01-10	–	–	41	26	29	16	6.5	M6	M5	1,200	1,200	250
WJ200QM-01-10-LLZ	± 0.7	z	41	26	29	16	6.5	M6	M5	1,200	1,200	250
WJ200QM-01-10-LLY	± 0.7	y	41	26	29	16	6.5	M6	M5	1,200	1,200	250
WJ200QM-01-10-AL	–	–	21	26	29	16	6.5	M6	M5	1,200	1,200	250
WJ200QM-01-16	–	–	100	34.5	36	18	9	M8	M6	2,100	2,100	400
WJ200QM-01-16-LLZ	± 1.0	z	100	34.5	36	18	9	M8	M6	2,100	2,100	400
WJ200QM-01-16-LLY	± 1.0	y	100	34.5	36	18	9	M8	M6	2,100	2,100	400
WJ200QM-01-16-AL	–	–	51	34.5	36	18	9	M8	M6	2,100	2,100	400
WJ200QM-01-20	–	–	190	42.5	45	27	9	M8	M6	3,200	3,200	500
WJ200QM-01-20-LLZ	± 1.0	z	190	42.5	45	27	9	M8	M6	3,200	3,200	500
WJ200QM-01-20-LLY	± 1.0	y	190	42.5	45	27	9	M8	M6	3,200	3,200	500
WJ200QM-01-20-AL	–	–	104	42.5	45	27	9	M8	M6	3,200	3,200	500

Order example:
WJ200QM-01-06 for a housing bearing, square
WJ200QM-01-06-LLZ for a housing bearing, square with floating z-direction
WJ200QM-01-06-AL for a housing bearing, square, made from aluminum

Can be combined with:

WSQ-...

WSQ-...

WSXQ-...

DryLin® W - Profile guides - Product range

Single rail, round, hard-anodized aluminum

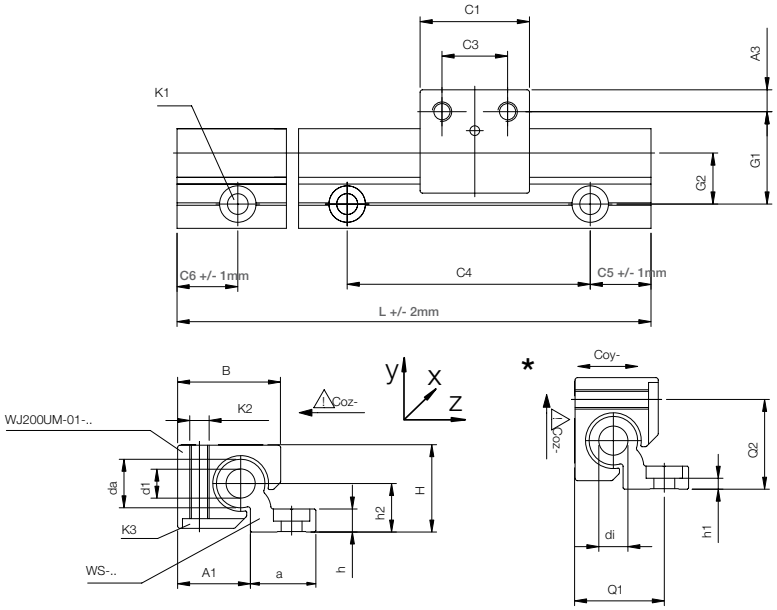

*This assembled position not possible for WS-10

DryLin® STAINLESS STEEL

Stainless steel version available
➤ Page

NOTE: The hard anodized surface of DryLin rails and shafts is integral to the tribology of the bearing system - therefore variations in color, and superficial crazing under the anodic layer may occur.

Hard anodized surfaces ➤ Page 888

Load data and dimensions [mm]

Part No.	Weight [kg/m]	H[57] ±0.25	da –0.1	di	L max.	a	h	h1	h2	G1	G2	A1	Q1	Q2
WS-10	0.62	18	10	–	4,000	27	5.5	5.5[58]	9	27	17	16.5	–	–
WS-16	0.98	27	16	8.0	4,000	27	7.5	3.5	14	33	19	25	32	28
WS-20	1.32	36	20	10.2	4,000	27	9.5	4.5	20	38	21	30	37	37
WS-25	2.03	45	25	14	4,000	32	11.5	5.5	25	46.5	25.5	37.5	45.5	46

Part No.	C4	C5 min.	C5 max.	C6 min.	C6 max.	K1 for screw DIN 912	Iy [mm⁴]	Iz [mm⁴]	Wby [mm³]	Wbz [mm³]
WS-10	120	20	79.5	20	79.5	M6[58]	19,000	2,850	1,000	310
WS-16	120	20	79.5	20	79.5	M8	36,000	12,900	1,800	940
WS-20	120	20	79.5	20	79.5	M8	57,100	35,000	2,700	1,900
WS-25	150	25	99.5	25	99.5	M10	129,000	86,000	4,900	3,800

Standard hole pattern: C5 = C6, please order with drawing for C5 ≠ C6

[57] Height dimension minus the bearing clearance tolerance

[58] Non-counterbored holes

Can be combined with:

WJ200UM(T)-...

WJ200UME-...

WJUM-..-ES-FG

WJRM-...

DryLin® W - Profile guides - Product range

Bearing carriage, round, made from die-cast zinc or machined aluminum

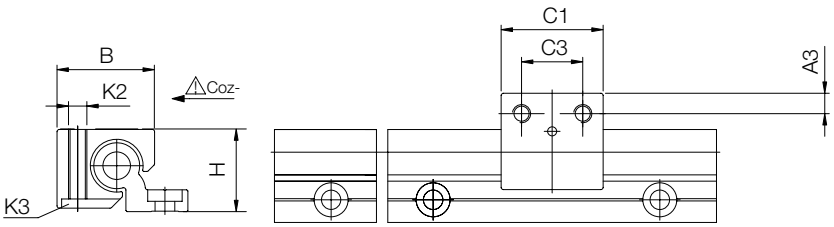

DryLin® STAINLESS STEEL

Stainless steel version available
➤ Page 1143

Order key

Type	Size	Options
WJ200UM	-01	-10-LL

DryLin® W	Liner iglide® J200	Housing bearing, round	Number of bearings	Size	Floating bearing

Options
LL: Floating bearing
AL: Aluminum housing bearing

Load data and dimensions [mm]

Part No.	Floating bearing clearance	Weight	B	C1	C3	A3	K2	K3	Stat. load capacity		
									Coy	Coz+	Coz–
		[g]							[N]	[N]	[N]
WJ200UM-01-10	–	41	26	29	16	6.5	M6	M5	1,200	1,200	250
WJ200UM-01-10-LL	±0.2	41	26	29	16	6.5	M6	M5	1,200	1,200	250
WJ200UM-01-10-AL	–	20	26	29	16	6.5	M6	M5	1,200	1,200	250
WJ200UM-01-16	–	100	34.5	36	18	9	M8	M6	2,100	2,100	400
WJ200UM-01-16-LL	±0.2	100	34.5	36	18	9	M8	M6	2,100	2,100	400
WJ200UM-01-16-AL	–	48	34.5	36	18	9	M8	M6	2,100	2,100	400
WJ200UM-01-20	–	190	42.5	45	27	9	M8	M6	3,200	3,200	500
WJ200UM-01-20-LL	±0.25	190	42.5	45	27	9	M8	M6	3,200	3,200	500
WJ200UM-01-20-AL	–	99	42.5	45	27	9	M8	M6	3,200	3,200	500
WJ200UM-01-25	–	425	52.5	58	36	11	M10	M8	4,800	4,800	950
WJ200UM-01-25-AL	–	250	52.5	58	36	11	M10	M8	4,800	4,800	950

Order example:
WJ200UM-01-10 for a housing, round, J200 liner
WJ200UM-01-10-LL for a housing, round, floating bearing
WJ200UM-01-10-AL for a housing, round, made from aluminum

Can be combined with:

WS-...

WS-..-ES-FG-...

WS-...

WS-...-ES-FG

WSX-...

Suitable liner materials

iglide® J

iglide® J200

iglide® T500

iglide® E7

iglide® A180

DryLin® W - Profile guides - Product range

Bearing carriage, individual, twin length, round, machined anodized aluminum

- Clear anodized aluminum

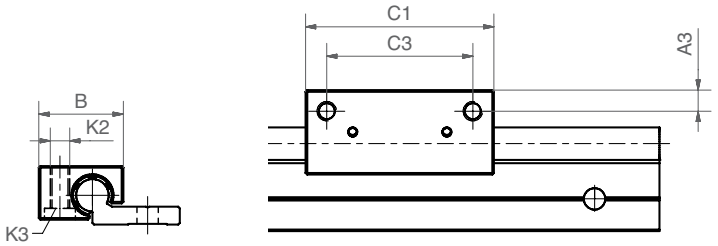

Order key

Type	Size	Option
WJ200UMT	-01-10	-AL

DryLin® W	Liner iglide® J200	Housing bearing, round	Twin length	Standard	Size	Aluminium

Technical data and dimensions [mm]

Part No.	Weight	B	C1	C3	A3	K2	K3	Static load capacity		
								Coy	Coz+	Coz–
	[g]							[N]	[N]	[N]
WJ200UMT-01-10-AL	43	26	58	45	6.5	M6	M5	2,400	2,400	500
WJ200UMT-01-16-AL	32	34.5	72	54	9	M8	M6	2,400	2,400	600

Can be combined with:

WS-... | WS-..-ES-FG-... | WS-... | WS-...-ES-FG | WSX-...

Suitable liner materials

iglide® J | iglide® J200 | iglide® T500 | iglide® E7 | iglide® A180

DryLin® W - Profile guides - Product range

Bearing carriage, individual, round, adjustable clearance

Order key

Type	Size
WJ200UME	-01-10

DryLin® W | Liner iglide® J200 | Housing bearing, round | Adjustable | Standard | Size

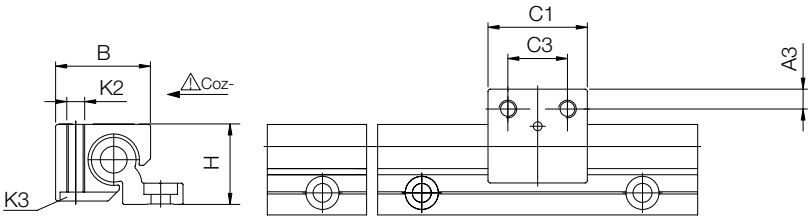

Technical data and dimensions [mm]

Part No.	Weight	B	C1	C3	A3	K2	H	SW	G1	Stat. load capacity		
								Allen Key		Coy	Coz+	Coz–
	[g]									[N]	[N]	[N]
WJUME-01-10	43	26	29	16	6.5	M6	18	1.5	27	560	560	250
WJ200UME-01-16	110	34.5	36	18	9	M8	27	2.5	33	980	980	460
WJ200UME-01-20	222	42.5	45	27	9	M8	36	2.5	38	1,500	1,500	500

Allen key supplied (SW)

Can be combined with:

WS-...

WS-..-ES-FG-...

WS-...

WS-...-ES-FG

WSX-...

Suitable liner materials

iglide® J

DryLin® W - Profile guides - Product range

Single rail round, made from stainless steel (316Ti)

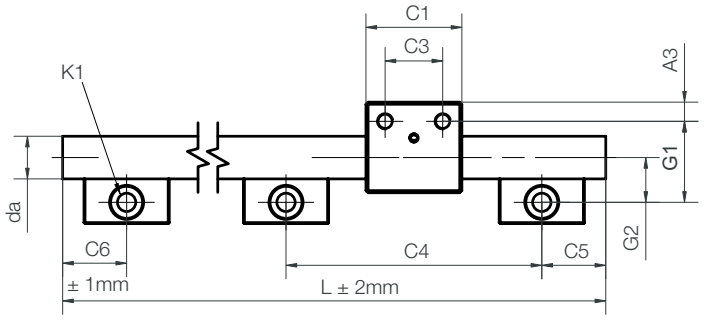

DryLin® STAINLESS STEEL

Material for housing and shaft support 1.4408 (AISI 316)
Shaft material 1.4571 (AISI 316Ti)
Size 25
Material for shaft, shaft support, housing 1.4571 (AISI 316Ti)

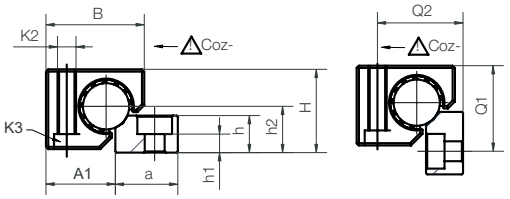

Technical data and dimensions [mm]

Part No.	Weight [kg/m]	H[57] ±0.25	da -0.1	L max.	a –0.3	h	h1	h2	G1	G2	A1	Q1	Q2
WS-10-ES-FG	0.87	18	10	3,000	27	5.5	5.5[58]	9	27	17	16.5	-	-
WS-16-ES-FG	2.22	27	16	3,000	27	12	4.5	14	33	19	25	32	28
WS-20-ES-FG	3.37	36	20	3,000	27	16	8	20	38	21	30	37	37
WS-25-ES	5.21	45	25	3,000	32	11.5	5.5	25	46.5	25.5	37.5	45.5	46

Part No.	C4	C5 min.	C5 max.	C6 min.	C6 min.	K1 for screw DIN 912	Iy [mm⁴]	Iz [mm⁴]	Wby [mm³]	Wbz [mm³]
WS-10-ES-FG	120	20	79.5	20	79.5	M6[58]	491	491	98	98
WS-16-ES-FG	120	20	79.5	20	79.5	M8	3,217	3,217	402	402
WS-20-ES-FG	120	20	79.5	20	79.5	M8	7,854	7,854	785	785
WS-25-ES	150	25	99.5	25	99.5	M10	19,175	19,175	1,534	1,534

[57] Height dimension minus the bearing clearance tolerance [58] With plain holes

Can be combined with:

WJ200UM(T)-...

WJ200UME-...

WJUM-..-ES-FG

WJRM-...

Suitable liner materials

iglide® J

iglide® T500

iglide® E7

iglide® A180

DryLin® W - Profile guides - Product range

Round double rail and bearing carriage, made from 316 (V4A) stainless steel

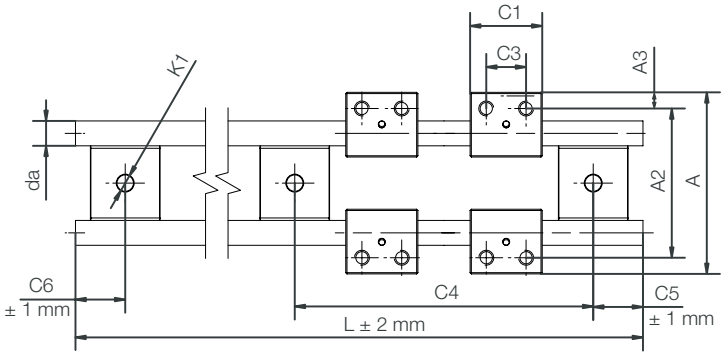

Size 10-20
Material for housing and shaft support 1.4408 (AISI 316)
Shaft material 1.4571 (AISI 316Ti)
Size 25
Material for shaft, shaft support, housing 1.4571 (AISI 316Ti)

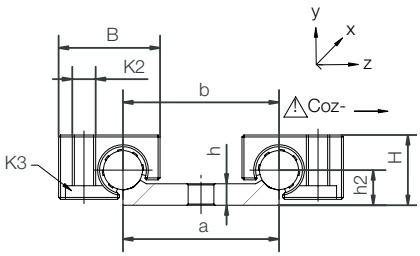

Technical data and dimensions [mm]

Part No.	Weight [kg/m]	H[57] ±0.25	da h9	L max.	a –0.3	b	h	h2	A	A2
WS-10-40-ES-FG	1.58	18	10	3,000	40	40	5.5	9	73	60

Part No.	C4	C5 min.	C5 max.	C6 min.	C6 max.	K1 for screw DIN 912
WS-10-40-ES-FG	120	20	79.5	20	79.5	M6

[57] Height dimension minus the bearing clearance tolerance

Bearing carriage, round, made from 316 (V4A) stainless steel

DryLin® STAINLESS STEEL

Technical data and dimensions [mm]

Part No.	Weight [g]	B	C1	C3	A3	K2	K3 Countersunk head screw	Stat. load capacity Coy [N]	Coz+ [N]	Coz- [N]
WJUM-01-10-ES-FG[59]	57	26	29	16	6.5	M6	M5	3,800	3,800	950
WJUM-01-16-ES-FG[59]	134	34.5	36	18	9	M8	M6	6,900	6,900	1,450
WJUM-01-20-ES-FG[59]	280	42.5	45	27	9	M8	M6	11,000	11,000	1,900
WJUM-01-25-ES[59]	564	52.5	58	36	11	M10	M8	16,000	16,000	3,600

[59] alternative with TUMO-01-... (XUMO-01-...) liners for high temperatures available. Part No. WTUM-01-... (WXUM-01-...)

DryLin® W - Profile guides - Product range

Double rail, square, hard-anodized aluminum

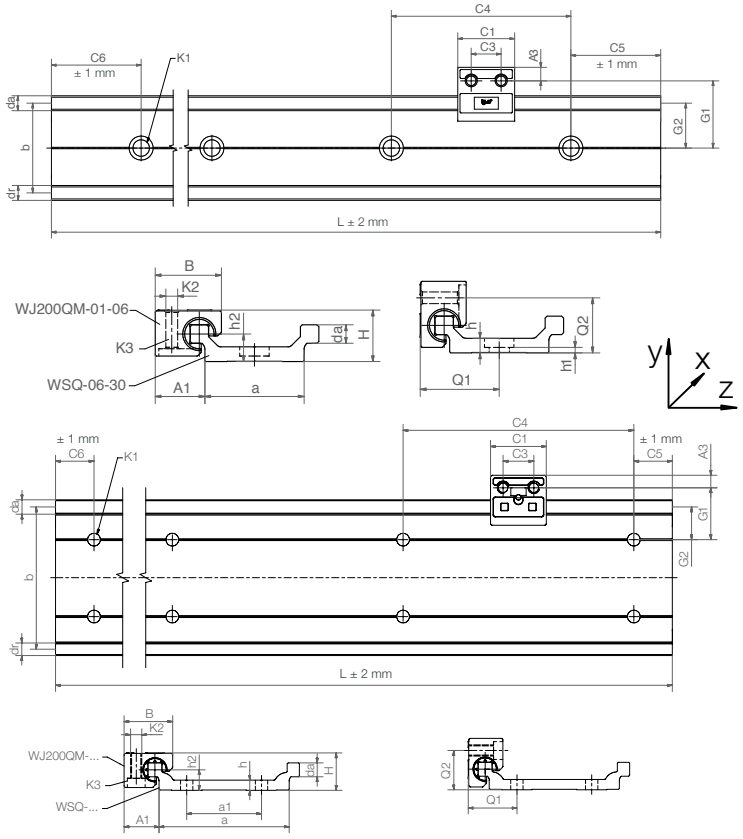

NOTE: The hard anodized surface of DryLin rails and shafts is integral to the tribology of the bearing system - therefore variations in color, and superficial crazing under the anodic layer may occur.

Hard anodized surfaces ➤ Page 888

Technical data and dimensions [mm]

Part No.	Weight	H[57]	da	dr	L	a	A1	b	h	h1	h2	G1	G2	a1[61]	Q1	Q2
	[kg/m]	±0.25	–0.1		max.											
WSQ-06-30	0.45	14	5	5	3.000	27$_{-0.4}$	13.5	30	4	4[58]	7.5	22.5	15	–	21.5	15
WSQ-10-40	0.92	20	75	6.7	4.000	36$_{-0.5}$	18.5	40	5.5	5.5[58]	11	30	20	–	29	21
WSQ-10-80	1.41	20	7.5	6.7	4.000	70$_{-0.7}$	25.0	74	5.5	5.5[58]	11	27	17	40	26	21
WSQ-10-120	2.02	20	7.5	6.7	4.000	116$_{-0.7}$	18.5	120	5.5	5.5[58]	11	30	20	80	29	21
WSQ-16-60	1.84	27	11.5	10.7	4.000	54$_{-0.5}$	30.0	58	7.5	3.5	14	43	29	–	42	28
WSQ-20-80	3.30	36	15	14.1	4.000	74$_{-0.7}$	30	82	9.5	4.5	20	38	21	40	37	37

Part No.	C4	C5		C6		K1 for screw	Iy	Iz	Wby	Wbz
		min.	max.	min.	max.	DIN 912	[mm^4]	[mm^4]	[mm^3]	[mm^3]
WSQ-06-30	60	20	49.5	20	49.5	M5[58]	19,000	1,250	1,100	200
WSQ-10-40	120	20	79.5	20	79.5	M6[58]	71,600	5,580	3,000	610
WSQ-10-80	120	20	79.5	20	79.5	M6[58]	335,000	7,070	8,300	700
WSQ-10-120	120	20	79.5	20	79.5	M6[58]	1,175,000	8,000	18,400	760
WSQ-16-60	120	20	79.5	20	79.5	M8	324,700	20,500	9,400	1,700
WSQ-20-80	120	20	79.5	20	79.5	M8	1,145,000	75,300	23,600	4,500

[57] Height dimension minus the bearing clearance tolerance
[58] Non-counterbored holes
[61] WSQ-06-30/-10-40/-16-60 a single row of mounting holes down the centerline, WSQ-10-80/-10-120/-20-80 two parallel rows of mounting holes

Can be combined with:

WJQM-...

WW-...

WWC-...

DryLin® W - Profile guides - Product range

High profile rail, square, hard-anodized aluminum

NOTE: The hard anodized surface of DryLin rails and shafts is integral to the tribology of the bearing system - therefore variations in color, and superficial crazing under the anodic layer may occur.

Hard anodized surfaces ➤ Page 888

Order key

Type	Length
WSX-06-30-	4000

Profile rail	High profile rail	Shafts-Ø	Rail width [mm]	Rail length [mm]

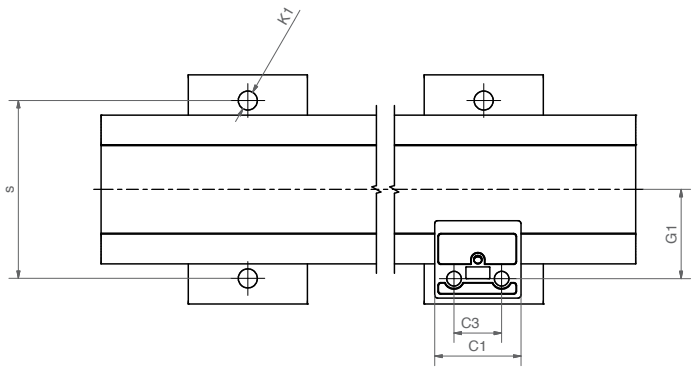

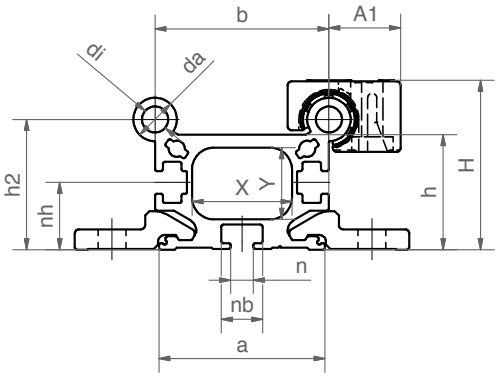

Technical data and dimensions [mm]

Part No.	Weight [kg/m]	H[57] ±0.25	da –0.1	di	L max.	a	A1	b	h	h1	h2	s	K1	C1	C3	G1
WSX-06-30	0.76	26 ±0.01	5	–	4,000	29.7	13.5	30	16	19.5	7.5	40	M5	19	10	20

nh	n	nb	T	X	Y	Iy [mm⁴]	Iz [mm⁴]
7	-	-	M5	12	10	30,391	11,674

[57] Height dimension minus the bearing clearance tolerance

Order example:

WSX-06-30: High profile rail, square
WSQ-06-30: Standard double rail, square

Can be combined with:

WJQM-...

WW-...

WWC-...

DryLin® W - Profile guides - Product range

Guide carriage, assembled, square

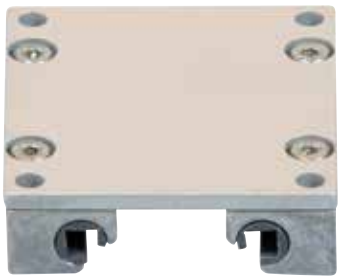

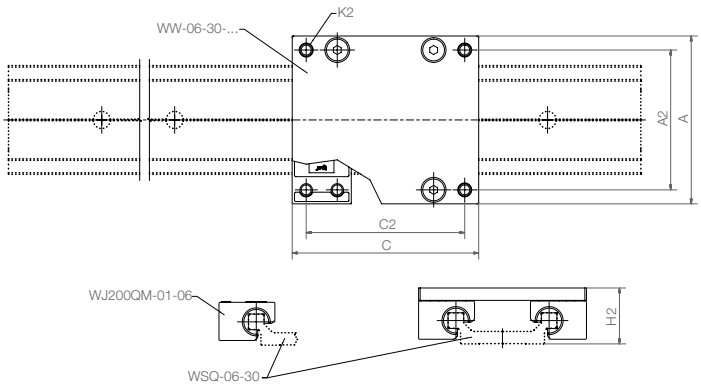

Order key

Type	Size
WW	06-30-06

Guide carriage | Shafts-Ø [mm] | Profile width | Carriage length

All parts can be ordered individually or as an assembled system

Technical data and dimensions [mm]

Part No.	Weight	A	C	A2	C2	K2	H2[57]	Stat. load capacity				
		Width	Length				±0.25	Coy	Coz	Mox	Moy	Moz
	[kg]							[N]	[N]	[Nm]	[Nm]	[Nm]
WW-06-30-06	0.10	54	60	45	51	M4	18	1,680	840	25	34	34
WW-06-30-08	0.11	54	80	45	71	M4	18	1,680	840	25	51	51
WW-06-30-10	0.12	54	100	45	91	M4	18	1,680	840	25	68	68

[57] Height dimension minus the bearing clearance tolerance

Order example:
WW-06-30-06: fitted guide carriage
WWC-06-30-06: Mono-Slide guide carriage

Can be combined with:

WSQ-... WSXQ-...

Suitable liner materials

iglide® J200

DryLin® W - Profile guides - Product range

One-piece carriage, anodized aluminum

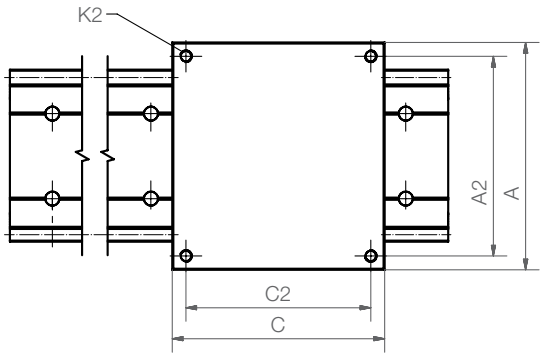

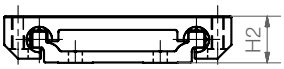

Order key

Type	Size
WWC	-10-40-10

Mono-Slide guide carriage | Shafts-Ø [mm] | Profile width | Length of carriage

Technical data and dimensions [mm]

Part No.	Weight	A	C	A2	C2	K2	H2[57]	Stat. load capacity				
		Width	Length				±0.2	Coy	Coz	Mox	Moy	Moz
	[kg]							[N]	[N]	[Nm]	[Nm]	[Nm]
WWC-06-30-06	0.07	54	60	45	51	M4	16	1,680	840	25	34	34
WWC-06-30-08	0.09	54	80	45	71	M4	16	1,680	840	25	51	51
WWC-06-30-10	0.12	54	100	45	91	M4	16	1,680	840	25	68	68
WWC-10-40-10	0.21	73	100	60	87	M6	22	4,800	2,400	96	170	170
WWC-10-40-15	0.32	73	150	60	137	M6	22	4,800	2,400	96	290	290
WWC-10-40-20	0.42	73	200	60	187	M6	22	4,800	2,400	96	410	410
WWC-10-80-10	0.28	107	100	94	87	M6	22	4,800	2,400	178	170	170
WWC-10-80-15	0.42	107	150	94	137	M6	22	4,800	2,400	178	290	290
WWC-10-80-20	0.56	107	200	94	187	M6	22	4,800	2,400	178	410	410
WWC-10-120-10	0.36	153	100	140	87	M6	22	4,800	2,400	288	170	170
WWC-10-120-15	0.54	153	150	140	137	M6	22	4,800	2,400	288	290	290
WWC-10-120-20	0.72	153	200	140	187	M6	22	4,800	2,400	288	410	410
WWC-16-60-10	0.41	104	100	86	82	M8	30	8,400	4,200	240	270	270
WWC-16-60-15	0.61	104	150	86	132	M8	30	8,400	4,200	240	480	480
WWC-16-60-20	0.80	104	200	86	182	M8	30	8,400	4,200	240	690	690
WWC-20-80-15	0.99	134	150	116	132	M8	40	12,800	6,400	525	670	670
WWC-20-80-20	1.33	134	200	116	182	M8	40	12,800	6,400	525	990	990
WWC-20-80-25	1.66	134	250	116	232	M8	40	12,800	6,400	525	1,250	1,250

[57] Height dimension minus the bearing clearance tolerance

Suitable liner materials

iglide® J Round version shown as example

DryLin® W - Profile guides - Product range

Double rail, round, hard-anodized aluminum

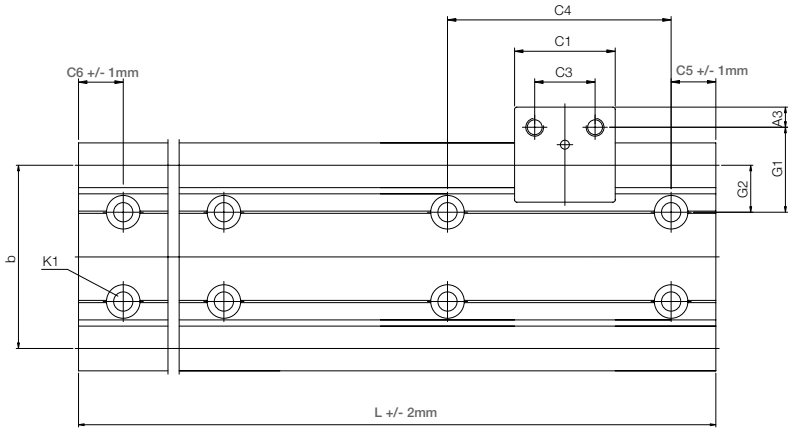

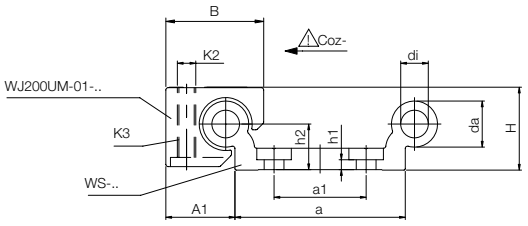

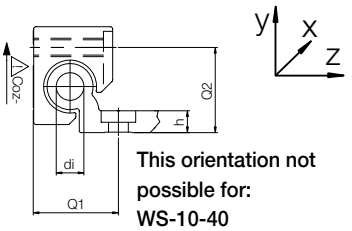

This orientation not possible for:
WS-10-40
WS-10-80
WS-10-120

NOTE: The hard anodized surface of DryLin rails and shafts is integral to the tribology of the bearing system - therefore variations in color, and superficial crazing under the anodic layer may occur.

Hard anodized surfaces ➤ Page 888

Technical data and dimensions [mm]

Part No.	Weight	H[57]	da	di	L	a	A1	b	h	h1	h2	G1	G2	a1[62]	Q1	Q2
	[kg/m]	±0.25			max.											
WS-10-40	1.00	18	$10_{-0.1}$	–	4,000	$40_{-0.5}$	16.5	40	5.5	5.5[58]	9	30	20	–	–	–
WS-10-80	1.50	18	$10_{-0.1}$	–	4,000	$74_{-0.7}$	16.5	74	5.5	5.5[58]	9	27	17	40	–	–
WS-10-120	2.02	18	$10_{-0.1}$	–	4,000	$120_{-0.7}$	16.5	120	5.5	5.5[58]	9	30	20	80	–	–
WS-16-60	1.96	27	$16_{-0.1}$	8.0	4,000	$54_{-0.5}$	25.0	58	7.5	3.5	14	43	29	–	32	28
WS-20-80	3.30	36	$20_{-0.1}$	10.2	4,000	$74_{-0.7}$	30.0	82	9.5	4.5	20	38	21	40	37	37
WS-25-120	5.8	45	$25_{-0.15}$	14.0	4,000	$120_{-0.7}$	37.5	131	11.5	5.5	25	46.5	25.5	80	45.5	46

[57] Height dimension minus the bearing clearance tolerance

[62] WS-10-40/-16-60 a single row of mounting holes down the centerline; WS-10-80/-10-120/-20-80/-25-120 two parallel rows of mounting holes

Part No.	C4	C5		C6		K1 for screw	Iy	Iz	Wby	Wbz
		min.	max.	min.	max.	DIN 912	[mm⁴]	[mm⁴]	[mm³]	[mm³]
WS-10-40	120	20	79.5	20	79.5	M6[58]	91,000	5,100	3,600	590
WS-10-80	120	20	79.5	20	79.5	M6[58]	388,000	6,100	9,200	650
WS-10-120	120	20	79.5	20	79.5	M6[58]	1,303,000	7,100	20,000	720
WS-16-60	120	20	79.5	20	79.5	M8	367,600	26,100	9,900	1,900
WS-20-80	120	20	79.5	20	79.5	M8	1,080,000	78,700	21,000	4,000
WS-25-120	150	25	99.5	25	99.5	M10	4,867,000	215,000	62,400	8,500

Standard hole pattern: C5 = C6, please order with drawing for C5 ≠ C6

[58] Non-counterbored holes

DryLin® W - Profile guides - Product range

High profile rail, round, hard-anodized aluminum

WSX-10-40

WSX-10-80

WSX-16-60

Order key

Type	Length
WSX-10-40	4000

Profile rail	High profile rail	Shafts-Ø	Rail width [mm]	Rail length [mm]

WSX-10-40 and WSX-10-80 use part # 75.40
WSX-16-60 use part # 75.50
Not included in delivery

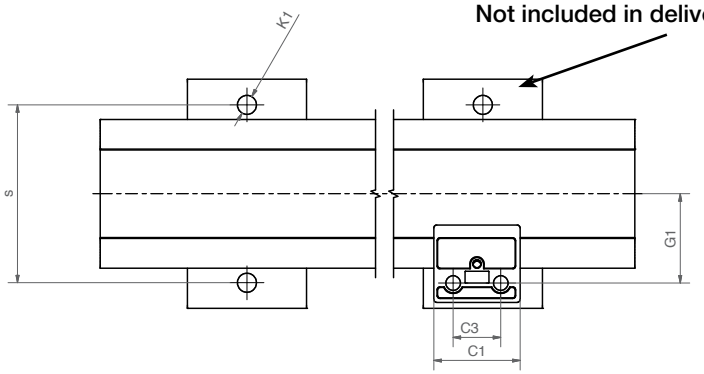

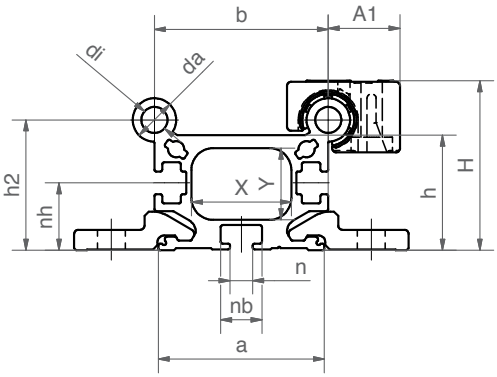

NOTE: The hard anodized surface of DryLin rails and shafts is integral to the tribology of the bearing system - therefore variations in color, and superficial crazing under the anodic layer may occur.

Hard anodized surfaces ➤ Page 888

Technical data and dimensions [mm]

Part No.	Weight [kg/m]	H[57] ±0.25	da –0.1	di	L max.	a	A1	b	h	h2	s	K1	C1	C3	G1
WSX-10-40	1.3	39 ±0.02	10	6	4,000	38.2	16.5	40	26.5	30	60	M6	29	16	30
WSX-10-80	2	39 ±0.02	10	6	4,000	72.2	16.5	74	26.5	30	94	M6	29	16	47
WSX-16-60	4.2	65 ±0.02	16	6	4,000	62	25	58	49	52	100	M8	36	18	50

nh	n	nb	T	X	Y	Iy [mm⁴]	Iz [mm⁴]
15.5	5.2	9.5	M5	23	16	97,560	54,910
15.5	5.2	9.5	M5	55	16	483,653	83,613
27.6	10	15.4	M5	40	27.0	540,876	773,489

[57] Height dimension minus the bearing clearance tolerance

Can be combined with:

WJ200UM(T)-...

WJ200UME-...

WJUM-..-ES-FG

WJRM-...

WW-...

WWE-...

Hybrid carriage

DryLin® W - Profile guides - Product range

Assembled guide carriage, round

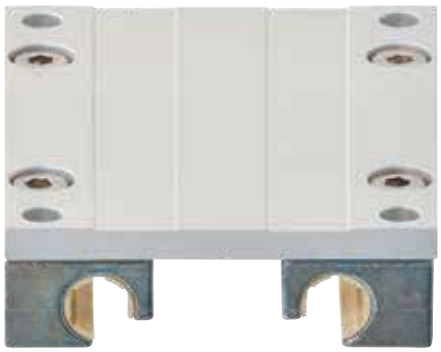

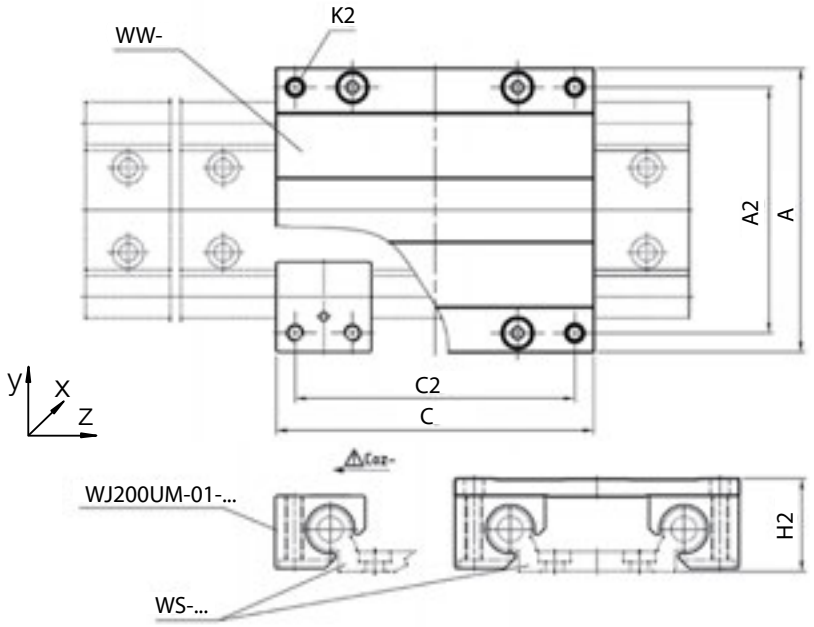

In the following sizes, also available with adjustable clearance:
10, 16 and 20; order example:
WWE-10-40-15

Technical data and dimensions [mm]

Part No.	Weight	A	C	A2	C2	K2	H2[57]	Stat. load capacity				
	[kg]	Width	Length				±0.25	Coy [N]	Coz [N]	Mox [Nm]	Moy [Nm]	Moz [Nm]
WW-10-40-10	0.29	73	100	60	87	M6	24	4,800	2,400	96	170	170
WW-10-40-15	0.34	73	150	60	137	M6	24	4,800	2,400	96	290	290
WW-10-40-20	0.40	73	200	60	187	M6	24	4,800	2,400	96	410	410
WW-10-80-10	0.34	107	100	94	87	M6	24	4,800	2,400	178	170	170
WW-10-80-15	0.42	107	150	94	137	M6	24	4,800	2,400	178	290	290
WW-10-80-20	0.50	107	200	94	187	M6	24	4,800	2,400	178	410	410
WW-10-120-10	0.41	153	100	140	87	M6	24	4,800	2,400	288	170	170
WW-10-120-15	0.54	153	150	140	137	M6	24	4,800	2,400	288	290	290
WW-10-120-20	0.66	153	200	140	187	M6	24	4,800	2,400	288	410	410
WW-16-60-10	0.71	104	100	86	82	M8	35	8,400	4,200	240	270	270
WW-16-60-15	0.84	104	150	86	132	M8	35	8,400	4,200	240	480	480
WW-16-60-20	0.97	104	200	86	182	M8	35	8,400	4,200	240	690	690
WW-20-80-15	1.20	134	150	116	132	M8	44	12,800	6,400	525	670	670
WW-20-80-20	1.30	134	200	116	182	M8	44	12,800	6,400	525	990	990
WW-20-80-25	1.50	134	250	116	232	M8	44	12,800	6,400	525	1,250	1,250
WW-25-120-15	2.54	195	150	173	128	M10	55	19,200	9,600	1,250	880	880
WW-25-120-20	2.80	195	200	173	178	M10	55	19,200	9,600	1,250	1,360	1,360
WW-25-120-25	3.07	195	250	173	228	M10	55	19,200	9,600	1,250	1,840	1,840

[57] Height dimension minus the bearing clearance tolerance

Can be combined with:

WS-...

WS-...-ES-FG

WSX-...

Suitable liner materials

iglide® J

iglide® J200

iglide® T500

iglide® E7

iglide® A180

DryLin® W - Profile guides - Product range

Double rail, weight-reduced, hard-anodized aluminum

WSQ-06-30-CAM-500

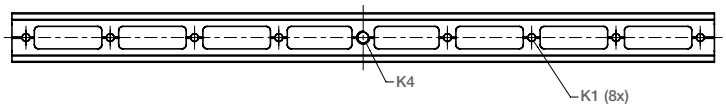

WS-10-40-CAM-500

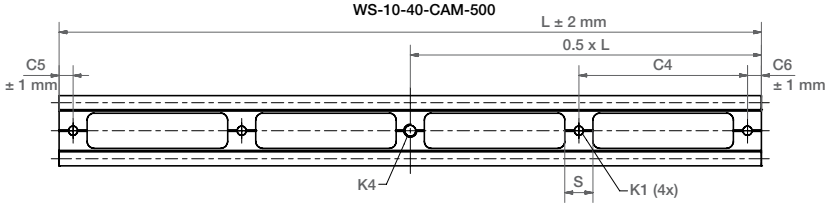

WS-10-40-CAM-1000

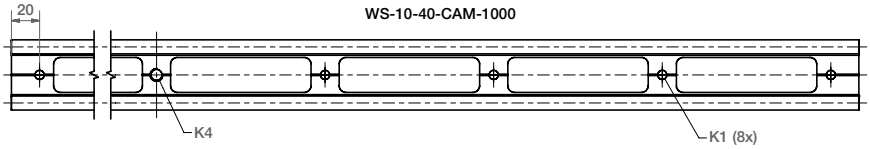

WS-10-80-CAM-500

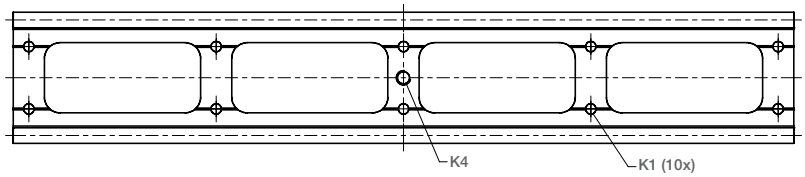

- 30 % weight reduction through machined cutouts
- Self-lubricating, quiet and lightweight

DryLin® W guide rail – Dimensions [mm]

Part No.	Identical profile	L	C4	C5	C6	S	K1 for screw DIN 192	K4	Weight [g]
WSQ-06-30-CAM-500	WSQ-06-30	500	60	10	10	12	M5	3/8" 16-UNC[63)]	159
WS-10-40-CAM-500	WS-10-40	500	120	10	10	20	M6	3/8" 16-UNC[63)]	353
WS-10-40-CAM-1000	WS-10-40	1,000	120	20	20	20	M6	3/8" 16-UNC[63)]	706
WS-10-80-CAM-500	WS-10-80	500	120	10	10	20	M6	3/8" 16-UNC[63)]	482

[63)] * UNC = Unified National Coarse, Imperial. Screw thread standard

Application example:
Camera slider with standard rail and carriage
➤ www.igus.com/camera

DryLin® W - Profile guides - Product range

Double rail/carriage for camera slider

- Wear resistant, smooth and quiet motion
- Adjustable brake level due to the turn-to-fit function
- Self-lubricating
- Easy and fast assembly

Technical options:

- Adjustable bearing housing
- Manual clamp (WW...-HKA ➤ **Page 937**

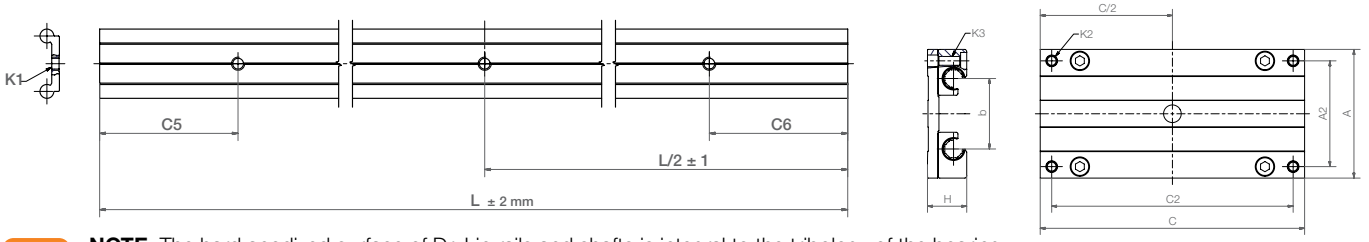

NOTE: The hard anodized surface of DryLin rails and shafts is integral to the tribology of the bearing system - therefore variations in color, and superficial crazing under the anodic layer may occur.

Hard anodized surfaces ➤ Page 888

DryLin® W special rails with 3 holes, 3/8" thread - Dimensions [mm]

Part No.	Size	L	C5 ± 1	C6 ± 1	Weight [kg/m]
WSQ-06-30-SL-1000	06	1,000	100	100	0.45
WSQ-06-30-SL-1500	06	1,500	100	100	0.45
WS-10-40-SL-1000	10	1,000	100	100	1.00
WS-10-40-SL-1500	10	1,500	100	100	1.00
WS-10-80-SL-1000	10	1,000	100	100	1.50
WS-10-80-SL-1500	10	1,500	100	100	1.50
WS-16-60-SL-1000	16	1,000	100	100	1.96
WS-16-60-SL-1500	16	1,500	100	100	1.96
WS-20-80-SL-1000	20	1,000	100	100	3.30
WS-20-80-SL-1500	20	1,500	100	100	3.30

DryLin® W complete carriage with ø10 mm through hole for 3/8" thread - Dimensions [mm]

Part No.	Size	C	A
WW-06-30-06-SL	06	60	54
WW-06-30-08-SL	06	80	54
WW-06-30-10-SL	06	100	54
WW-10-40-10-SL[64) 65)]	10	100	73
WW-10-40-15-SL[64) 65)]	10	150	73
WW-10-40-20-SL[64) 65)]	10	200	73
WW-10-80-10-SL[64) 65)]	10	100	107
WW-10-80-15-SL[64) 65)]	10	150	107
WW-10-80-20-SL[64) 65)]	10	200	107

Part No.	Size	C	A
WW-16-60-10-SL[65)]	16	100	104
WW-16-60-15-SL[64) 65)]	16	150	104
WW-16-60-20-SL[64) 65)]	16	200	104
WW-20-80-15-SL[64) 65)]	20	150	134
WW-20-80-20-SL[64) 65)]	20	200	134
WW-20-80-25-SL[64) 65)]	20	250	134

[64)] Optional with integrated manual clamp (add suffix "-HKA")
[65)] Optional with adjustable "Turn-To-Fit" bearing to reduce bearing clearance (Order example: WWE-...)

DryLin® W - Profile guides - Product range

Manual clamp for simple positioning

Manual clamping, for simple positioning
WHKA- ...

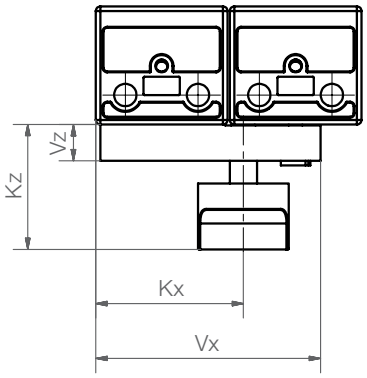

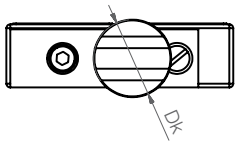

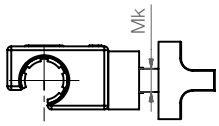

Technical data and dimensions [mm]

Part No.	Mk	Vx	Kx	Vz	Kz	Dk	Min. holding strength[67]	Min. tightening torque
WHKA-06[66]	M6	34.5	21.5	8	28	20	30 N	0.8 Nm
WHKA-10[66]	M6	50	33	8	28	20	30 N	0.8 Nm
WHKA-16[66]	M8	72	41	10	31	28	60 N	1.5 Nm
WHKA-20[66]	M8	90	62	10	31	28	70 N	1.5 Nm
WHKA-25[66]	M8	96	65	12	31	28	70 N	1.5 Nm

[66] **The manual clamp is also available assembled as a complete carriage (suffix "-HKA", order example WW-10-40-10-HKA)**
➤ Complete carriage WW, Page 934
[67] **Condition: dry rail surface**

Please Note: The creep behavior of the clamped plastic results in reduced clamping force over time (up to 70%). Therefore safety-related parts should use an alternative method.

Aluminum manual clamp

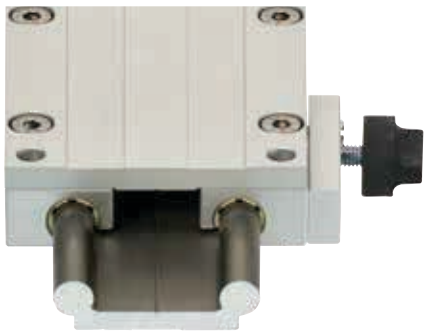

Technical data and dimensions [mm]

Part No.	Mk	Vx	Kx	Vz	Kz	Dk	Min. holding strength[67]	Min. tightening torque
WHKA-06-AL [68]	M6	34.5	21.5	8	28	20	30 N	0.8 Nm
WHKA-10-AL [68]	M6	50	33	8	28	20	30 N	0.8 Nm
WHKA-16-AL [68]	M8	72	41	10	31	28	60 N	1.5 Nm
WHKA-20-AL [68]	M8	90	62	10	31	28	70 N	1.5 Nm
WHKA-25-AL [68]	M8	96	65	12	31	28	70 N	1.5 Nm

[68] **The manual clamp is also available assembled as a complete carriage (suffix "-AL-HKA", order example: WW-10-40-10-HKA)**
➤ Complete carriage WW, Page 934
[67] **Condition: dry rail surface**

DryLin® W - Profile guides - Product range

Manual clamp for higher retention forces

Manual clamping,
for simple positioning
WHKD- ...

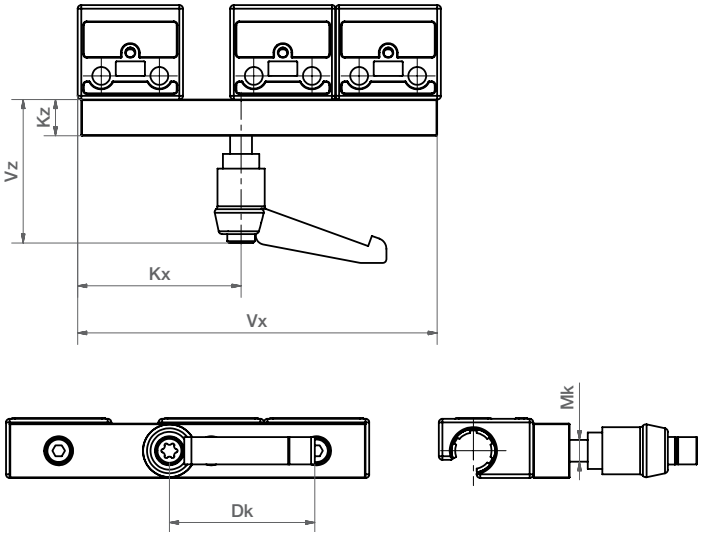

Technical data and dimensions [mm]

Part No.	Mk	Vx	Kx	Vz	Kz	Dk	Min. holding strength[67]	Min. tightening torque
WHKD-1010 [69]	M6	100	45	40	10	40	70 N	2.5 Nm
WHKD-1015[69]	M6	150	95	40	10	40	70 N	2.5 Nm
WHKD-1615[69]	M8	150	81	40	12	40	90 N	3.5 Nm
WHKD-1620[69]	M8	200	131	10	12	40	90 N	3.5 Nm
WHKD-2015[69]	M8	150	63	40	12	40	90 N	3.5 Nm
WHKD-2020[69]	M8	200	113	40	12	40	90 N	3.5 Nm

[69] **The hand clamp WHKD is available assembled in the following complete carriages: WW-10-40-10-HKD, WW-20-80-15-HKD.**
Dimensions ➤ Complete carriage WW, Page 934

[67] **Condition: dry rail surface**

Please Note: The creep behavior of the clamped plastic results in reduced clamping force over time (up to 70%). Therefore safety-related parts should use an alternative method.

DryLin® W - Profile guides - Product range

End caps

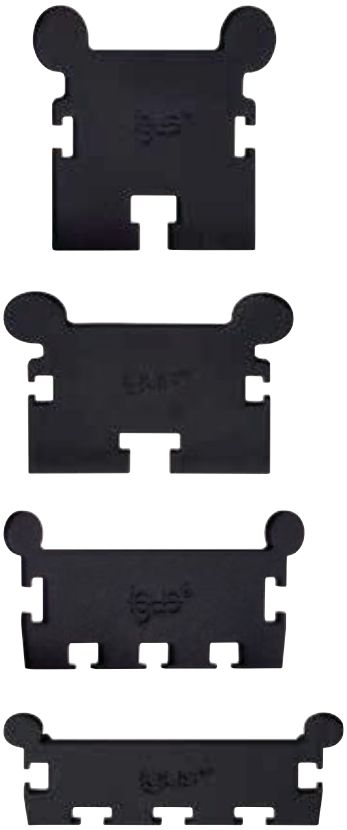

Part No.
WSX-0630-EC
WSX-1040-EC
WSX-1080-EC
WSX-1660-EC

End caps for DryLin® high profile rails WSX

Suitable for DryLin® W high profile rails, the new end caps also offer a practical protection against the ingress of dust, dirt or chips. Available in 4 installation sizes.

- For DryLin® W high profile rails WSX
- 4 installation sizes
- Protection of the hollow chambers against the entry of foreign particle
- Easy to fit
- End caps for cutting edges

DryLin® W spare plastic plain bearings

Size	Material	Housing bearing	Tooth profile	Bearing Part No.
10/16/20/25	iglide® J200	WJ200UM-01-ø	round	J200UMO-01-ø
10/16/20/25 (floating bearing)	iglide® J200	WJ200UM-01-ø LL	round	J200UMO-01-ø LL
10/16/20	iglide® T500	WTUM (WXUM*)-01-ø	round	TUMO (XUMO*)-01-ø
10 (adjustable)	iglide® J	WJUME-01-10	round	JUME-01-10
16/20 (adjustable)	iglide® J200	WJ200UME-01-ø	round	J200UME-01-ø
6/10/16/20	iglide® J200	WJ200QM-01-ø	square	J200QM-01-ø
6/10/16/20 (floating bearing)	iglide® J200	WJ200QM-01-ø LLY/LLZ	square	J200QM-01-LL[70)]

[70)] **Depending on assembly direction, can be used as a y or z floating bearing**
***X is the European equivalent material for iglide® T500**

DryLin® W - Profile guides - Assembly instructions

End caps

1

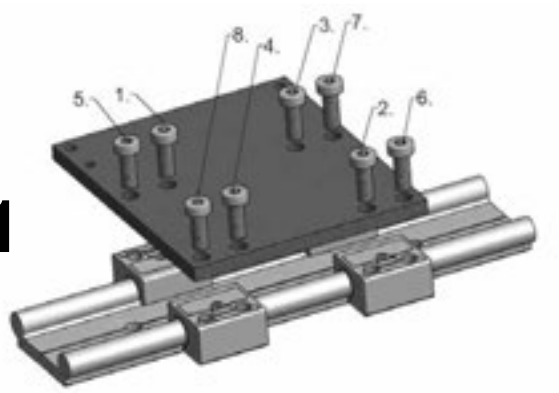

2

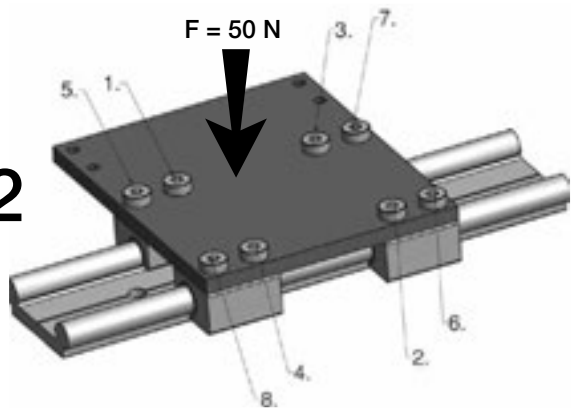

DryLin® W rail with housing bearings

During the installation process, a compressive force of minimum 50 N is recommended on the center of the mounting surface. Alternatively, a plastic hammer/soft face hammer can be used during and after the mounting to align the bearing.

Installation size	Max. tightening torque [Nm]	Thread
W-06	1.5	M4
W-10	6.0	M6
W-16	15.0	M8
W-20	15.0	M8
W-25	30.0	M10

Tightening torque for DryLin® connections between metal parts ➤ Page 975

1

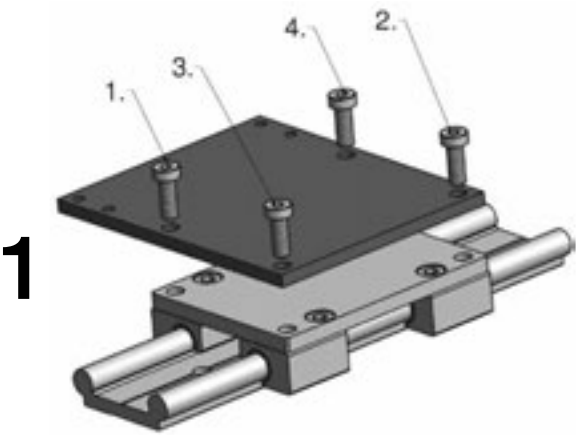

2

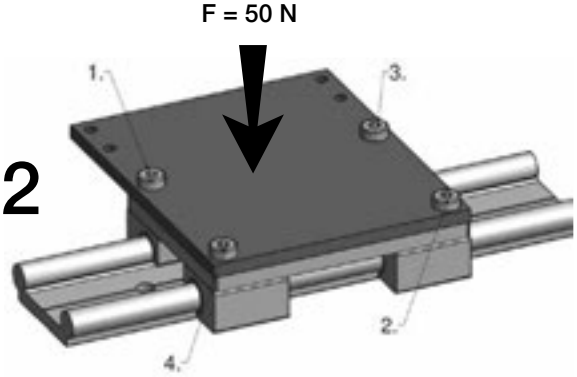

DryLin® W rail with complete slide system

During the installation process, a compressive force of minimum 50 N is recommended on the center of the mounting surface. Alternatively, a plastic hammer/soft face hammer can be used during and after the mounting to align the bearing.

Installation size	Max. tightening torque [Nm]	Thread
W-06	1.5	M4
W-10	6.0	M6
W-16	15.0	M8
W-20	15.0	M8
W-25	30.0	M10

Please refer to the drawing for the correct screw assembly sequence.

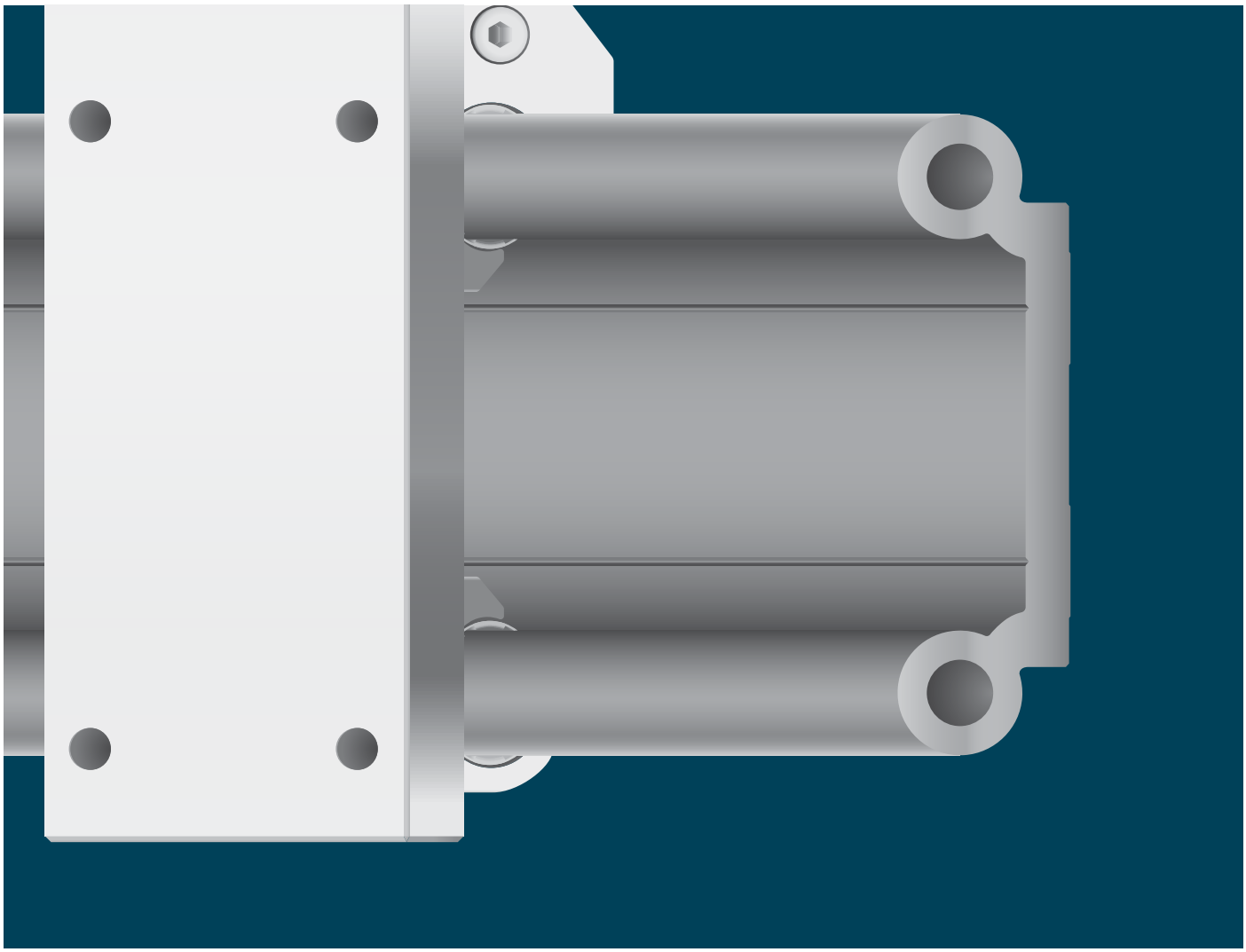

DryLin® W Hybrid Bearings

- Simultaneously rolling and sliding bearings
- Single or double roller
- Low driving forces
- For manual adjustment
- Dry operation
- Single bearings and complete carriages
- Quiet operation

DryLin® W - Hybrid bearings - Advantages

Hybrid bearings from the DryLin® W linear construction kit

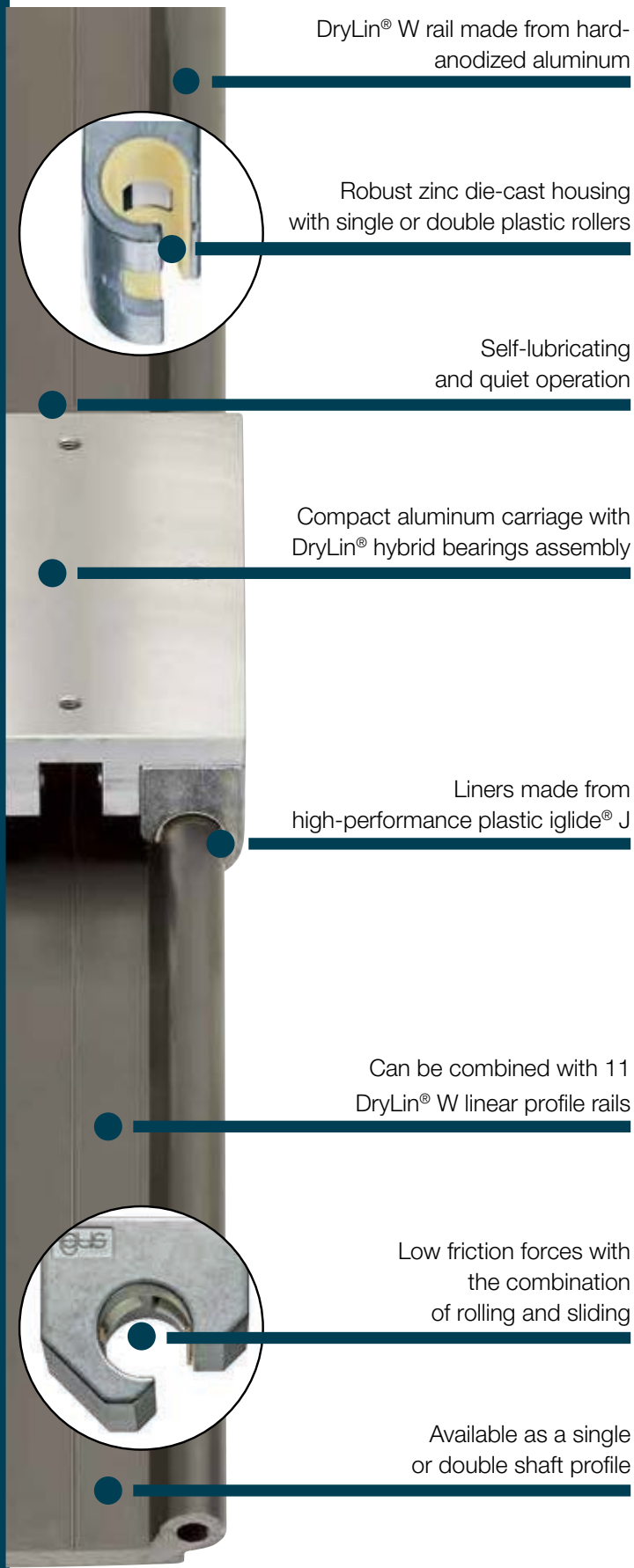

Combined sliding and rolling for low drive forces

DryLin® hybrid bearings offer a unique self-lubricating combination of plain and rolling bearings. Integrated rollers achieve low drive forces while the sliding effect simultaneously protects against lateral forces. This combination makes DryLin® hybrid bearings ideal for manual adjustments such as machine and safety doors/guards, mobile control panels, and more. The efficiency of the zinc die-cast design also cuts costs. DryLin® hybrid bearings can be used on a variety of hard-anodized aluminum profiles available from the DryLin® W linear construction kit.

- Low driving force required
- Smooth operation
- Cost effective
- Low-profile
- Offset and abuse forces are easily absorbed by sliding elements

Typical application areas:

- Machine doors
- Control panels
- Manual applications
- Safety doors/guards
- Camera equipment

iF product design award 2012
DryLin® hybrid carriages

Tightening torque for DryLin® connections between metal parts ➤ **Page 975**

Available from stock
Detailed information about delivery time online.

DryLin® W - Hybrid bearings - Product overview

Sliding instead of rolling

DryLin® WJRM

- Single bearing with single or double plastic rollers
- iglide® J sliding bearing with plastic support roller
- Can be combined with DryLin® W single and double rails

➤ **Page 946**

DryLin® WWR

- Complete carriage assembly for lateral adjustments
- DryLin® W double rail profiles
- Also available as a short, compact carriage for multi-carriage solution

➤ **Page 948**

DryLin® WWH

- Complete carriage with 4 integrated hybrid bearings
- For horizontal installation
- Available in 2 sizes, also suitable as a camera slider

➤ **Page 949**

Suitable DryLin® W rail profiles

➤ **From page 911**

DryLin® W - Application examples

The smooth, quiet operation and enormous cost advantages are utilized on the door guards of this machine tool using DryLin® Hybrid bearings

Control panel adjustment unit

This camera slider using DryLin® WJRM hybrid bearings offers extremely smooth performance, as well as guiding vertical movement

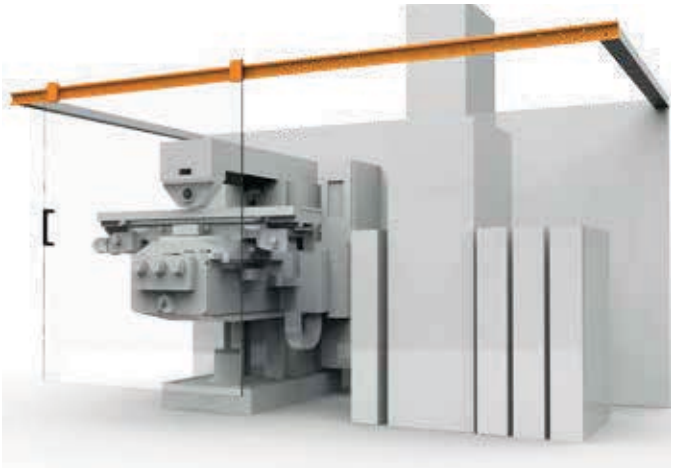

The new DryLin® W hybrid carriage on a sliding door application

DryLin® W hybrid bearings and W profile guide systems used in camera dollies and sliders.

DryLin® W - Technical data

DryLin® W hybrid bearings type 01

The DryLin® W hybrid bearings from the WJRM-01 series are equipped with a plastic roller and plain bearing liner. Bearing housings are available in 3 rail diameter sizes, and can be used with DryLin® W single or double shaft rails. The hybrid bearing should be installed so that the bearing load is applied in the rolling direction. Other load directions are possible, but may create greater friction forces.

DryLin® W hybrid bearings type 21

The DryLin® W hybrid bearings in the WJRM-21 series are each equipped with two bearing plastic rollers at an angle of 70° or 80°. Available in 3 sizes, they can be combined with DryLin® W single and double shaft rails. The double roller bearings offer a higher load capacity than the -01 version and helps to reduce the friction force caused by cantilevered loads.

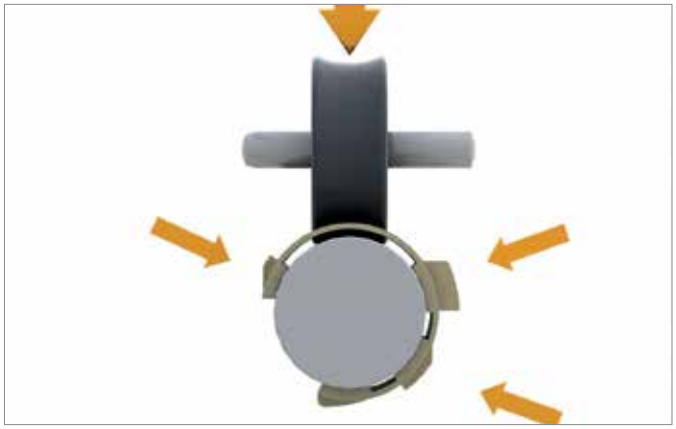

Forces absorbed by hybrid bearing

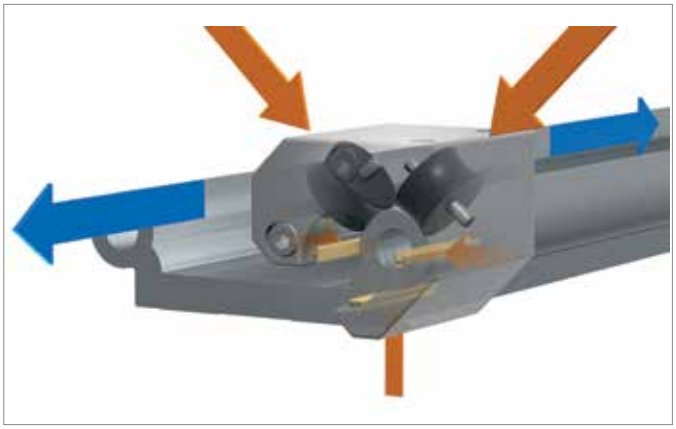

Forces absorbed by hybrid double roller bearing

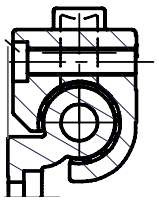

Installation position 01

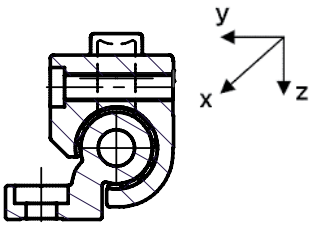

Installation position 02

Installation position WJRM-01-...

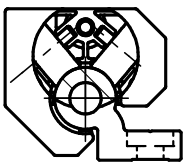

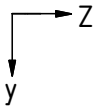

Installation position WJRM-21-...

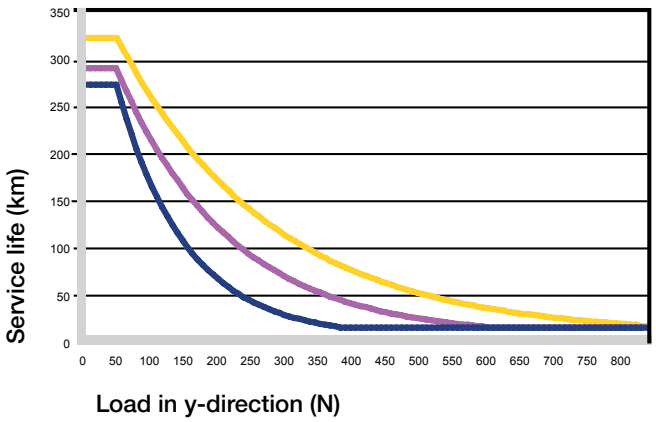

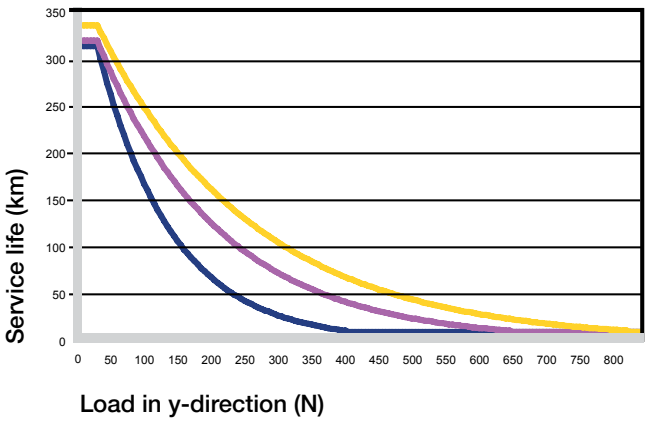

DryLin® W - Hybrid bearings - Product range

Hybrid bearings with a bearing-supported plastic roller

Order key

Type

WJRM-01-10

Hybrid bearing | With one roller | Size 10

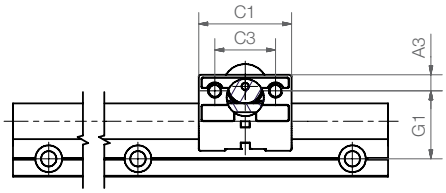

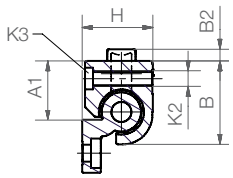

Installation position 01

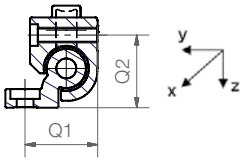

Installation position 02

Installation position 02 in installation size ø 10 when using a WJRM-02-10 hybrid bearing

Technical data and dimensions [mm]

Part No.	Static load capacity Co	Dynamic load capacity Cz+ at total running distance (km)			F · v
		10	100	200	max.
	[N]	[N]	[N]	[N]	[N · m/s]
WJRM-01-10[71)]	250	250	90	50	50
WJRM-02-10*	250	250	90	50	50
WJRM-01-16	400	400	140	70	80
WJRM-01-20	550	550	200	100	80

* Installation position 02 requires WJRM-02-10, this cannot be performed with WJRM-01-10

Part No.	Coefficient of friction in z-direction	Weight	A1	A3	B	B2	C1	C3	G1	H	K2 for thread	K3 for screw	Q1	Q2
	[µ]	[g]												
WJRM-01-10	< 0.1	46	16.5	6.5	26	2.5	35	22	27	18	M6	M5	–	–
WJRM-02-10	< 0.1	46	16.5	6.5	26	2.5	35	22	27	18	M6	M5	–	–
WJRM-01-16	< 0.1	131	25	9	34.5	5	48	30	33	27	M8	M6	32	28
WJRM-01-20	< 0.1	232	30	9	42.5	6	52	34	38	36	M8	M6	37	37

Can be combined with:

WS-...

WS-..-ES-FG-...

WS-...

WS-...-ES-FG

WSX-...

DryLin® W - Hybrid bearings - Product range

Hybrid double bearings with angled plastic rollers

Order key

Type

WJRM-21-20

Hybrid bearing	With two roller	Size

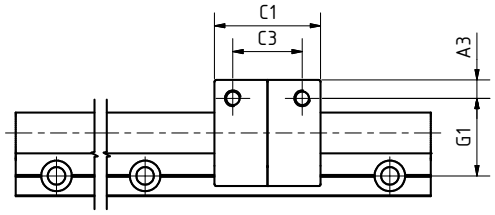

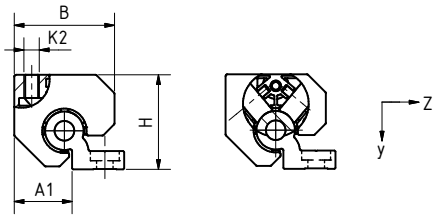

Technical data and dimensions [mm]

Part No.	Static load capacity Co	Dynamic load capacity Cz+ at total running distance (km)			F · v
		10	100	200	max.
	[N]	[N]	[N]	[N]	[N · m/s]
WJRM-21-10	350	350	125	70	50
WJRM-21-16	600	600	210	105	80
WJRM-21-20	840	840	300	150	80

Part No.	Coefficient of friction in z-direction	Weight	A1	A3	B	C1	C3	G1	H	K2 for screw
	[µ]	[g]								
WJRM-21-10	< 0.1	115	16.5	6.5	31	35	22	27	28	M6
WJRM-21-16	< 0.1	250	25	9	44	48	30	32	41	M8
WJRM-21-20	< 0.1	320	30	9	52	52	34	38	49	M8

WJRM-21-10 and WJRM-21-16: 70° angle between the rollers / WJRM-21-20: 80° angle between the rollers

WJRM-21-... optionally available with hand clamp
Suffix "-HKA"

Can be combined with:

WS-... WS-..-ES-FG-... WS-... WS-...-ES-FG WSX-...

DryLin® W - Hybrid bearings - Product range

Hybrid carriages – single & double roller bearings for lateral installation

Order key

Type	Dimensions	Option
WWR-21-80	-	01

DryLin® W	Hybrid carriage	Installation size	Compact

Options
01: Carriage, short design
15: Complete carriage, long design

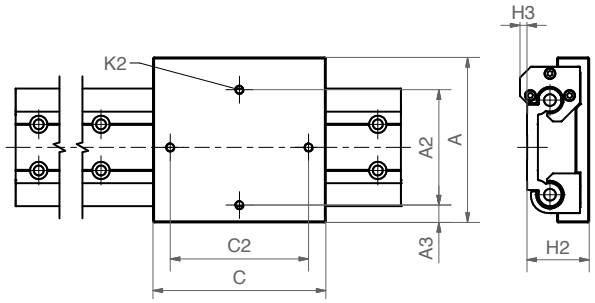

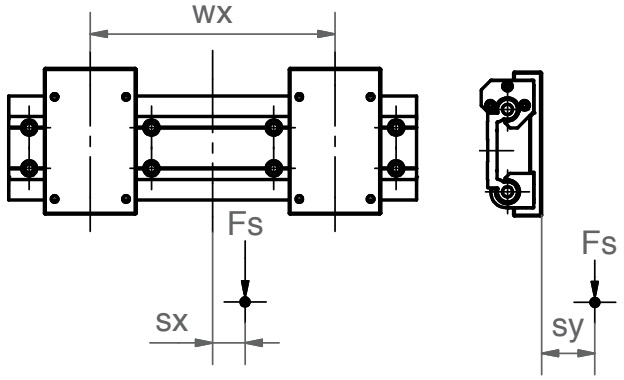

Load data and dimensions [mm]

Part No.	A	C	A2	C2	K2	H2	A3	H3	sx min.	sx max.	sy min.	sy max.
	Width	Length				±0.17						
WWR-21-80-01	143	90	100	70	M8	54	15	6	-49	+49	-34	+34
WWR-21-80-15	143	150	100	120	M8	54	15	6	-wx/2	+wx/2	-34	+34

Order example:
WWH-10-40-10: Assembled hybrid carriage with 4 single roller hybrid bearings
WWR-21-80-01: Assembled single hybrid carriage as a "door opener" with 2 single roller hybrid bearings and 2 double roller hybrid bearings

Can be combined with:

WS-... WS-...-ES-FG WSX-...

DryLin® W - Hybrid bearings - Product range

Hybrid carriages with 4 bearings for horizontal installation

Order key

Type	Dimensions
WWH-10-40-10	

DryLin® W	Hybrid carriage	Installation size	Length of carriage [mm]

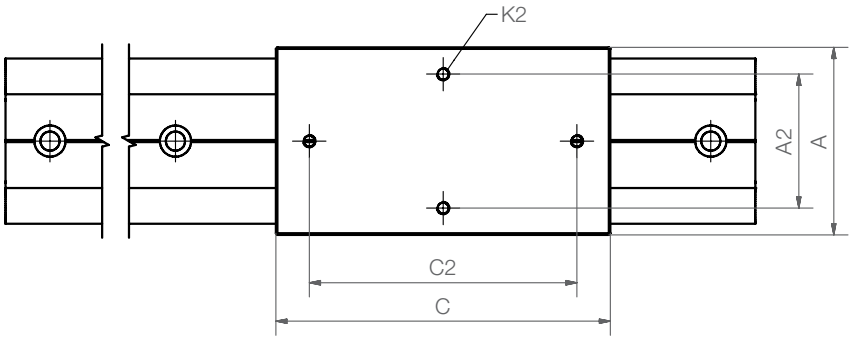

Dimensions [mm]

Part No.	Weight	A	C	A2	C2	K2	H2	Static load capacity				
								Coy	Coz	Mox	Moy	Moz
	[kg]						±0.17	[N]	[N]	[Nm]	[Nm]	[Nm]
WWH-10-40-10	0.35	58	100	40	80	M5	34	1,000	1,000	20	16	32
WWH-16-60-15	0.96	84	150	60	120	M6	46	1,600	1,600	45	38	77
WWH-20-80-25	2.05	134	250	116	232	M8	57	3,360	3,360	138	640	640

Can be combined with:

WS-...

WS-...-ES-FG

WSX-...

Notes

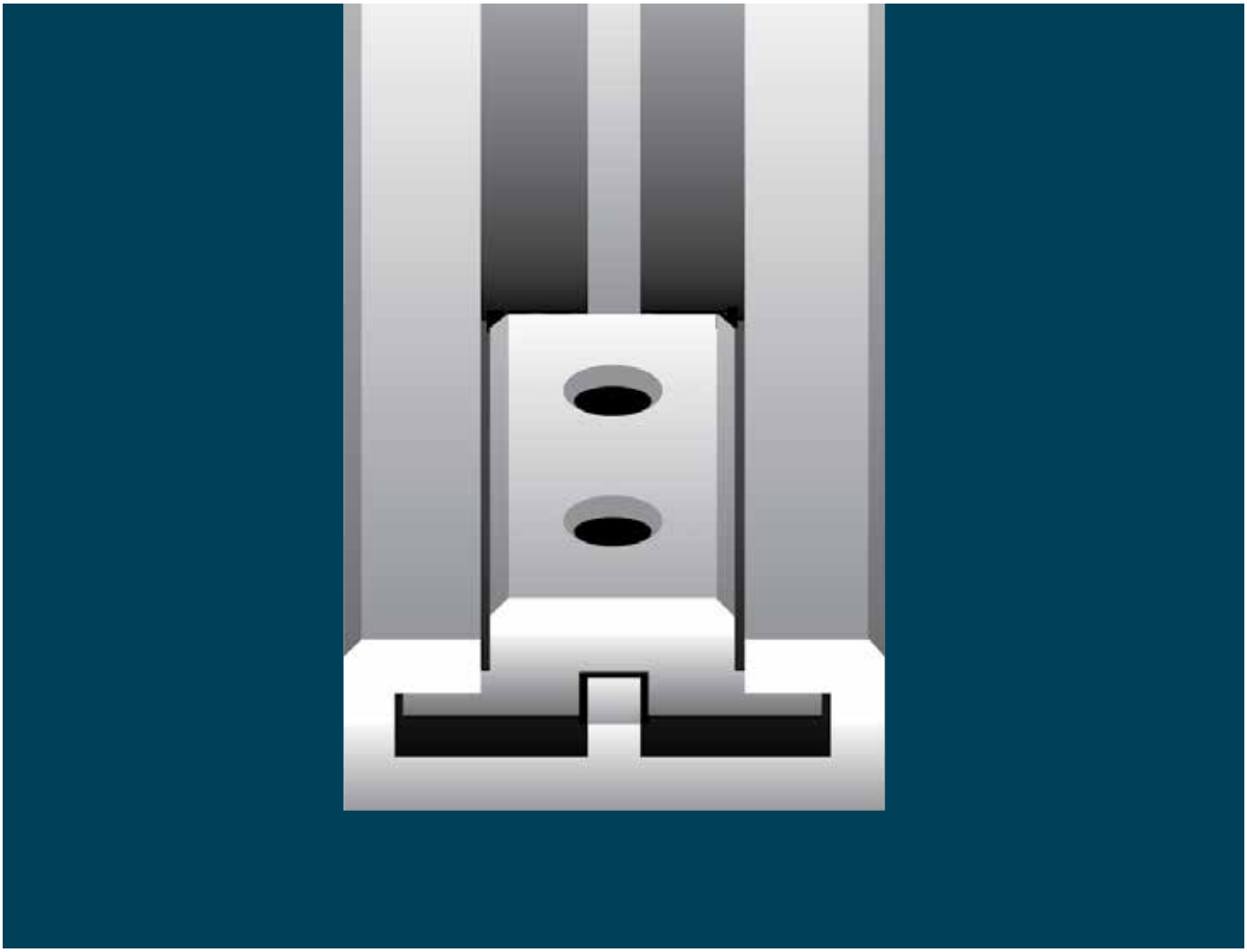

DryLin® N Low-profile Guide Systems

- Low-profile
- Interchangeable sliding elements
- Anodized aluminum rail
- High speed and acceleration possible
- Self-lubricating
- Low weight

DryLin® N - Low-profile guide systems - Advantages

Lightweight, maintenance free, corrosion resistant and low wear

Maintenance-free low-profile guides - DryLin® N

The low-profile range DryLin® N offers extremely low profile linear bearing and rail systems in a variety of widths. Like all DryLin® products, the complete DryLin® N system operates free of external lubricants. The selected materials and the unique design make DryLin® N a cost-effective and flexible guide system.

- Small mounting heights ranging from 6 - 12 mm
- Lightweight
- A variety of carriage options available, including preloaded options
- Self-lubricating and maintenance-free
- Low coefficient of friction and wear rates
- Rails available in silver or black anodized aluminum
- Low cost

Typical application areas:

- Agricultural ● Vehicle manufacturing
- Medical ● Architectural
- Packaging, etc.

Lifetime calculation online
➤ www.igus.com/drylin-finder

max. +194°F (90°C)
min. –40°F (-40°C)

Carriage lengths: 60-250 mm
Carriage widths: 54-195 mm
Rail length: up to 4,000 mm

Detailed technical data
➤ www.igus.com/drylinN

Available from stock
Detailed information about delivery time online.

Cleanroom certification IPA Fraunhofer

Free of toxins ROHS 2002/95/EC

ESD compatible (electrostatic discharge)

DryLin® N - Low-profile guide systems - Product overview

Compact design in four different versions

Size 17

Size 27

Size 40

Size 80

Linear guide

- 4 Sizes 17, 27, 40 and 80 mm
- Corrosion resistant and light weight
- Standard hole pattern or no hole rail
- Clear anodized (silver) or “Black edition” (black anti-reflection surface)

➤ **From page 958**

Carriage – size 17

- Solid plastic made from high-performance plastic iglide® J, brass thread
- Standard, preload (PL), floating (LL)
- Easy to fit due to available double carriage in 30 mm /40 mm length
- Designed for the smallest installation spaces

➤ **Page 959**

Carriage – size 27

- Many carriage and material options with lengths of up to 80 mm
- Zinc casting with clip-on or overmolded plastic liner
- Standard, preload (PL), floating (LL)
- High-temperature carriages and manual clamp available

➤ **Page 961**

Carriage – size 40

- Zinc die-casting with thread/through hole
- Standard, preload (PL), floating (LL)
- Multiple carriage options

➤ **Page 963**

Carriage – size 80

- Carriages with wide load-bearing surface
- Self-lubricating due to high-performance plastics J/J200
- Zinc casting with clip-on or overmolded plastic liner
- Carriages made from zinc casting or aluminum with threaded holes (reduced installation height as no pins used)

➤ **Page 965**

Accessories

- End caps
- Manual clamp for size 27
- Telescopic rails (with/without locking function)

➤ **Page 968**

Based on DryLin® N elements

DryLin® SLN ➤ Drive Technology

➤ **From page 1281**

DryLin® N - Low-profile guide systems - Application examples

The low-profile size of DryLin® N makes it possible to achieve maximum work area in this delta-style 3D printer.

DryLin® N low-profile guides and DryLin® SD lead screw drives perform the height adjustments, and the black anodized DryLin® N profile blends seamlessly into this 3D printer's design.

In the redesign on this ATM machine, the durability and lack of maintenance, plus easy-to-install design of DryLin® N made it an ideal bearing solution.

The quiet, self-lubricating, and low-profile design of DryLin® N enabled it to fulfill the safety requirements of this application. Multiple sections of rails are joined to achieve the desired length.

The removal unit is moved along the X-Y axis using space and cost-saving DryLin® N.

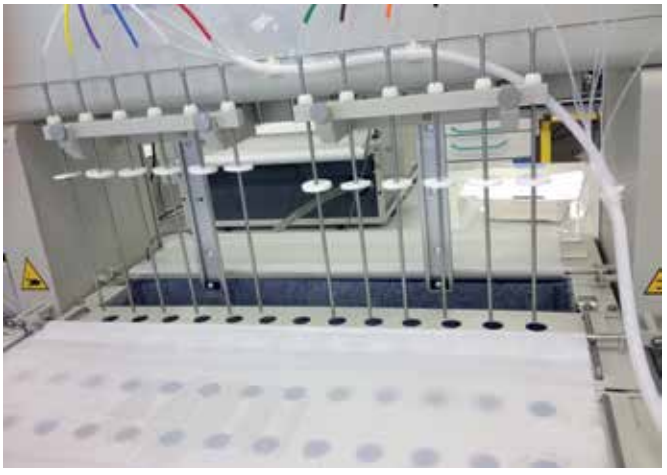

This sampling device used DryLin® linear bearings to remove the sampled materials smoothly and precisely.

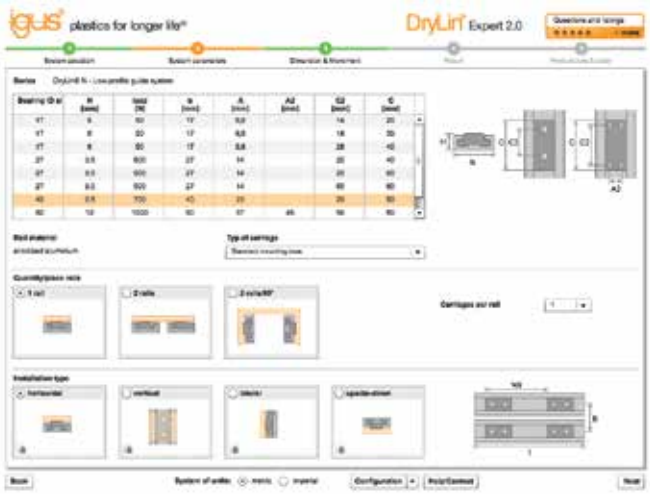

DryLin® expert - 2.0 system selections & service life calculation with CAD

A number of online tools, including configurators and service life calculators are available for DryLin® linear systems. Calculate required drive force and other technical details, and get direct access to CAD files and online ordering.

➤ **www.igus.com/drylin-expert**

The igus® CAD configurator gives you the ability to design and save your linear guide system, individual components directly as a 3D model in all commonly used formats, or to have these sent via email – No costs or registration required.

➤ **www.igus.com/DryLin-CAD**

DryLin® N - Low-profile guide systems - Design rules

Floating bearings version

NW-... NW-... LLZ NW-... LLY NW-... LLYZ

LLZ Floating bearing in z-direction
LLY Floating bearing in y-direction
LLYZ Floating bearing in yz-direction

Floating bearing	NW-17	NW-27	NW-40	NW-80
LLY	0.6	0.45	0.4	0.6
LLZ	0.5	0.8	0.8	0.8
LLYZ	Y = 0.6 Z = 0.5	Y = 0.3 Z = 0.4	Y = 0.4 Z = 0.8	Y = 0.6 Z = 0.8

The 2:1 Rule ➤ Page 902
Technical details on floating bearings ➤ Page 903

Technical options for DryLin® low-profile guide systems

Clip-on sliding elements

iglide® J slide elements are clipped to the die-cast zinc carriage body and can be quickly and easily changed at any time, reusing the zinc carriages. Replacement sliding elements are available.

Overmolded sliding elements

J/J200 are overmolded over the zinc die-cast body, offering the benefit of a one-piece carriage for easy assembly. With the overmolded carriages it is not possible to replace the sliding elements, the entire carriage must be replaced at the end of service life.

Preload function

The use of sliding elements with an integrated spring preload function prevents rattling of the carriages in the profile rail. Silent adjustments are possible using the preload principle, making the guide suitable for use in noise-sensitive applications, such as in medical, furniture, and aircraft/automotive interiors. This preload increases the drive force by a maximum of 10 N

Anodized surfaces

All DryLin® N guide rails are clear anodized and exhibit good wear and corrosion resistance properties. All rail sizes are available with clear anodizing or anti-reflective black anodized surfaces. These are technical, non-decorative coatings and slight crazing and color variations can be expected. These variations will not affect the resistance, corrosion resistance, or gliding properties. Rail ends and post processed surfaces are uncoated.

Tightening torque for DryLin® connections between metal parts

Metric thread [Da]	Torque [Nm]	Recommended torque [Nm]
M4	1.0 - 2.8	1.5
M5	2.0 - 5.5	3.0
M6	4.0 - 10.0	6.0
M8	8.0 - 23.0	15.0
M10	22.0 - 46.0	30.0

Note the minimal screw in depth for aluminum and zinc parts: 1.5 x Da

System selection				
System	**N17**	**N27**	**N40**	**N80**
Rail width	17 mm	27 mm	40 mm	80 mm
Installation height	6 mm	9.5 mm	9.5 mm	12 mm
General properties				
Rail weight	150 g/m	290 g/m	450 g/m	1,140 g/m
Carriage weight	1.7 g	9–12.5 g	30 g	100 g
Max. rail length	2,000 mm	3,000 mm	3,000 mm	4,000 mm
Load capacities, static				
Fy	50 N	500 N	700 N	1,000 N
Fz	50 N	500 N	700 N	1,000 N
Mx	0.31 Nm	5 Nm	10 Nm	32.4 Nm
My, Mz	0.18 Nm	2.5 Nm	6 Nm	15 Nm
Carriage options				
Floating bearing in y-direction	●	●	●	●
Floating bearing in z-direction	●	●	●	●
Floating bearing in yz-direction	●	●	●	●
Preload (1 N)	●	●	●	–
Molded version	–	●	●	●
Carriage with plain hole	–	●	●	–
Carriage with threaded hole	●	●	●	●

Table 01: System selection ● available – not available

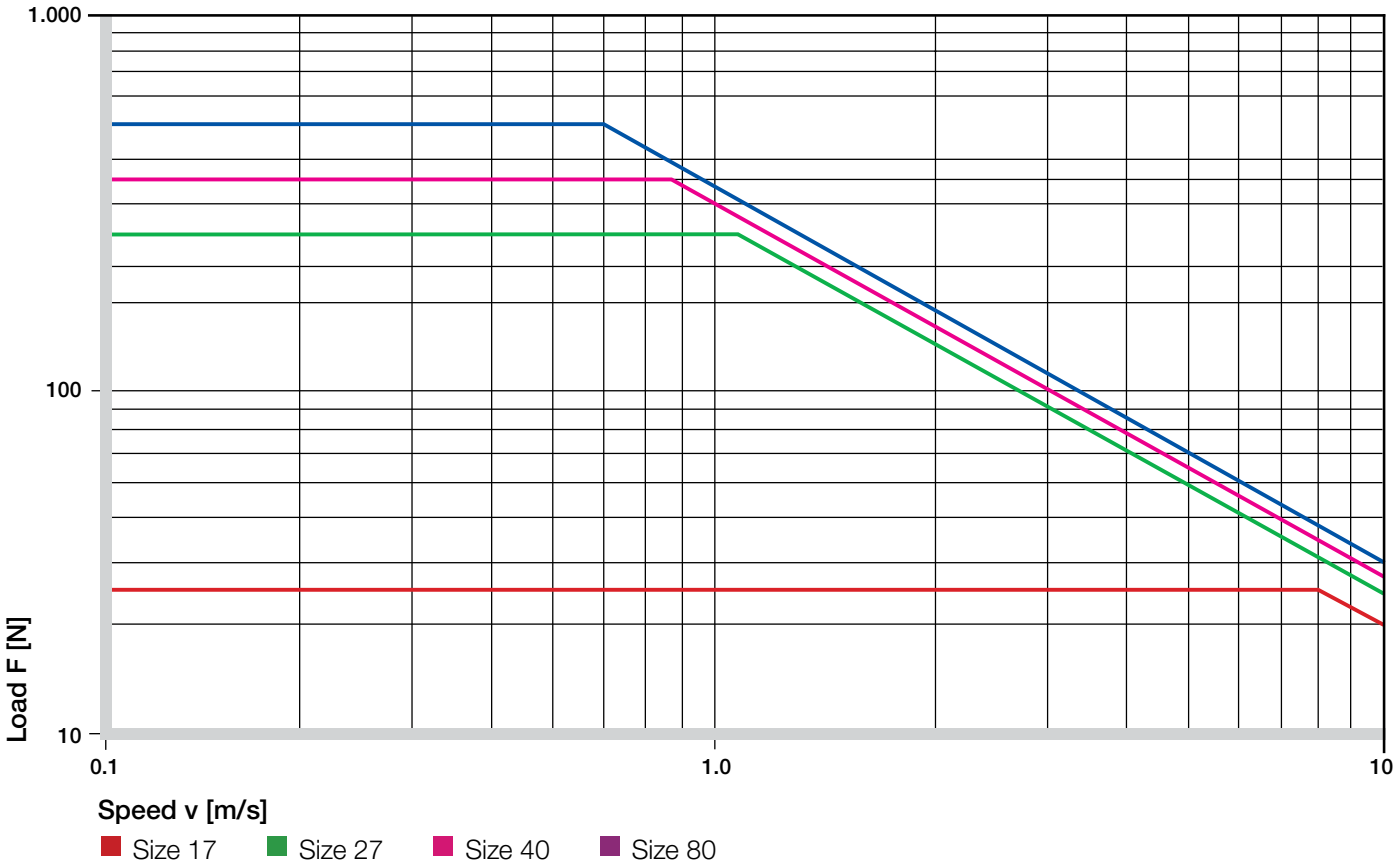

Diagram 01: F v diagram, maximum permissible dynamic load

DryLin® N - Low-profile guide systems - Product range

Size 17

Standard, anodized with holes

Anodized without holes

Black anodized, with holes

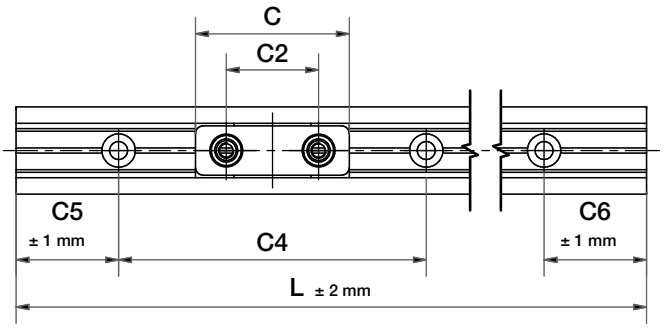

NW-02-17

NW-02-17-P

NW-22-17-30

NW-22-17-40

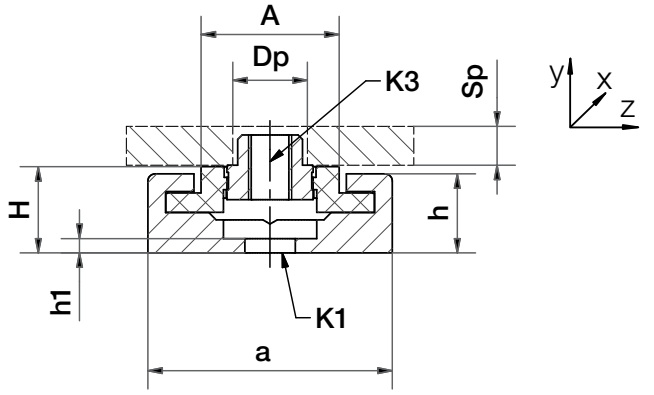

Selection aid – guide carriage

Part No.	Single	Double	Through hole	Threaded pin	Threaded hole	Preload	Solid plastic	Clipped-on	Molded	High temp.
NW-02-17	●			●			●			
NW-02-17-P	●			●		●	●			
NW-22-17-30		●		●			●			
NW-22-17-40		●		●			●			

DryLin® N - Low-profile guide systems - Product range

Guide rails and carriages – size 17

Order key

Type			Installation size		Options
NW	-	22	- 17 -	30	- LLY
DryLin® N	Guide carriages	Carriage type	Rail width	Carriage length	Floating bearing in y-direction

Type
02 = Carriage with threaded mounting boss
22 = Double carriage with threaded mounting boss
Options
P = Preload
Floating bearing
LLY = Floating y-direction
LLZ = Floating z-direction
LLYZ = Floating yz-direction

Guide rail (standard / undrilled / AR black anodized) – dimensions [mm]

Part No.	L	a	C4	C5 = C6		h	h1	K1[73]	Iy	Iz	Weight
	max.			min.	max.				[mm⁴]	[mm⁴]	[g/m]
NS-01-17-☐ [72]	2,000	17	60	20	49.5	5.5	0.9	Ø3.5	1,700	120	150
NS-01-17S-☐ [72]	2,000	17	–	–	–	5.5	0.9	–	1,700	120	150
NS-01-17-AR-☐ [72] (black anodized)	2,000	17	60	20	49.5	5.5	0.9	Ø3.5	1,700	120	150

[72] Please add the required length in mm , symmetrical standard hole pattern C5 = C6
[73] For cap screw with low head (i.e. DIN 7984, DIN 6912, DIN 84, EN ISO 1707)

Guide carriage – dimensions [mm]

Part No.	H ±0.35	A	C	C2	K3[74]	Sp	Dp	Weight [g]
NW-02-17	6.0	9.6	20	14	M3	2.5	5.0	1.7
NW-02-17-P	6.0	9.6	20	14	M3	2.5	5.0	1.7
NW-22-17-30	6.0	9.6	30	18	M3	2.5	5.0	2.4
NW-22-17-40	6.0	9.6	40	28	M3	2.5	5.0	2.6

[73] For cap screw with low head (i.e. DIN 7984, DIN 6912, DIN 84, EN ISO 1707)
[74] Metal thread

Order example:
NS-01-17-1500 = Guide rail, size 17, length 1 @ 500 mm
NW-02-17-P-LLY = Guide carriage with threaded pin, size 17, preload, floating bearing in y-direction

DryLin® N - Low-profile guide systems - Product range

Size 27

Standard, anodized with holes | Anodized without holes | Black anodized, with holes

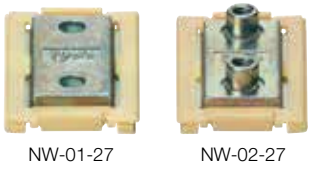

NW-01-27 | NW-02-27

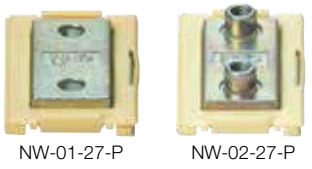

NW-01-27-P | NW-02-27-P

NW-01-27-HT | NW-02-27-HT

NW-21-27-60-P | NW-22-27-60-P

NW-11-27 | NW-12-27

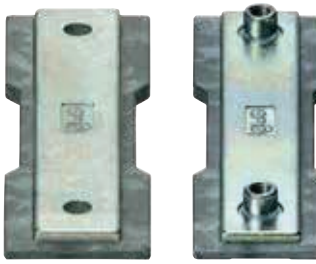

NW-11-27-80 | NW-12-27-80

NW-12-27-80-HKA

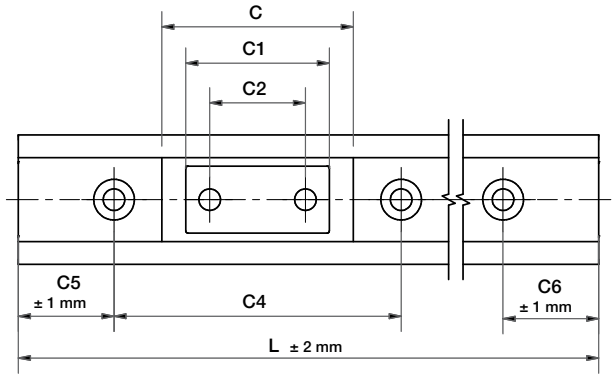

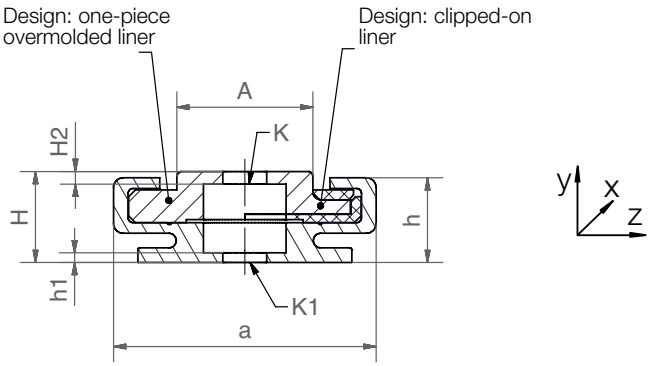

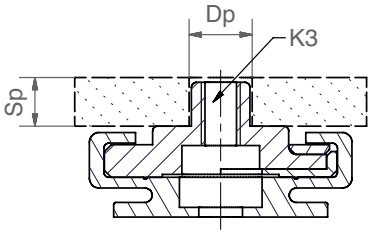

Selection aid – guide carriage

Part No.	Single	Double	Through hole	Threaded mounting boss	With low thread mount	Preload	Solid plastic	Clipped-on plastic liners	Overmolded plastic liner	High temp. 266°F (130°C)
NW-01-27	●		●					●		
NW-11-27	●		●						●	
NW-01-27-P	●		●			●		●		
NW-01-27-HT	●		●					●		●
NW-02-27	●			●				●		
NW-12-27	●			●					●	
NW-02-27-P	●			●		●		●		
NW-02-27-HT	●			●				●		●
NW-21-27-60-P	●		●			●	●			
NW-22-27-60-P	●				●	●	●			
NW-11-27-80		●	●						●	
NW-12-27-80		●		●					●	

DryLin® N - Low-profile guide systems - Product range

Guide rails and carriages – size 27

Order key

Type	Size	Options
NW	01	27 - HT - LLY

- DryLin® N Guide carriages
- Carriage type
- Rail width
- High temperature
- Floating bearing in y-direction

Carriage type
See selection aids
Options
P = Preload
HT = High temperature 266°F (130°C)
Floating bearing
LLY = Floating y-direction
LLZ = Floating z-direction
LLYZ = Floating yz-direction

Guide rail (standard / undrilled / AR black anodized) – dimensions [mm]

Part No.	L	a	C4	C5 = C6		h	h1	K1[73]	Iy	Iz	Weight
	max.			min.	max.				[mm⁴]	[mm⁴]	[g/m]
NS-01-27- ☐ [72]	3,650	27	60	20	49.5	9	1.1	Ø4.5	6,524	588	290
NS-01-27S- ☐ [72]	3,650	27	–	–	–	9	1.1	–	6,524	588	290
NS-01-27-AR- ☐ [72] (black anodized)	3,000	27	60	20	49.5	9	1.1	Ø4.5	6,524	588	290

[72] Please add the required length in mm , symmetrical standard hole pattern C5 = C6
[73] For cap screw with low head (i.e. DIN 7984, DIN 6912, DIN 84, EN ISO 1707)

Guide carriage – dimensions [mm]

Part No.	H ±0.35	A	C	C1	C2	H2	K[73]	K3[74]	M[75]	Sp	Dp	Weight [g]
NW-01-27	9.5	14.0	40	30	20	1.2	Ø4.5	–	–	–	–	10.8
NW-11-27	9.5	14.0	34	30	20	1.2	Ø4.5	–	–	–	–	10.8
NW-01-27-P	9.5	14.0	40	30	20	1.2	Ø4.5	–	–	–	–	10.8
NW-01-27-HT	9.5	14.0	40	30	20	1.2	Ø4.5	–	–	–	–	11.0
NW-02-27	9.5	14.0	40	30	20	–	–	M4	1.2	5.0	6.5	12.5
NW-12-27	9.5	14.0	34	30	20	–	–	M4	1.2	5.0	6.5	12.5
NW-02-27-P	9.5	14.0	40	30	20	–	–	M4	1.2	5.0	6.5	12.5
NW-02-27-HT	9.5	14.0	40	30	20	–	–	M4	–	5.0	6.5	13.0
NW-21-27-60-P	9.5	14.0	60	60	20	0.7	Ø4.5	–	–	–	–	9.0
NW-22-27-60-P	9.5	14.0	60	60	20	–	–	M4	1.2	5.0	6.5	12.0
NW-11-27-80	9.5	14.0	80	76	60	1.2	Ø4.5	–	–	–	–	25.0
NW-12-27-80	9.5	14.0	80	76	60	–	–	M4	1.2	5.0	6.5	25.0

[73] For cap screw with low head (i.e. DIN 7984, DIN 6912, DIN 84, EN ISO 1707)
[74] Metal thread

Order example:
NS-01-27-1500 = Guide rail, size 27, length 1 @ 500 mm
NW-02-27-P-LLY = Guide carriage with threaded mounting boss, size 27, preload, floating bearing in y-direction

DryLin® N - Low-profile guide systems - Product range

Size 40

Standard, anodized with holes

Anodized without holes

Black anodized, with holes

NW-01-40

NW-02-40

NW-01-40-P

NW-02-40-P

NW-11-40

NW-12-40

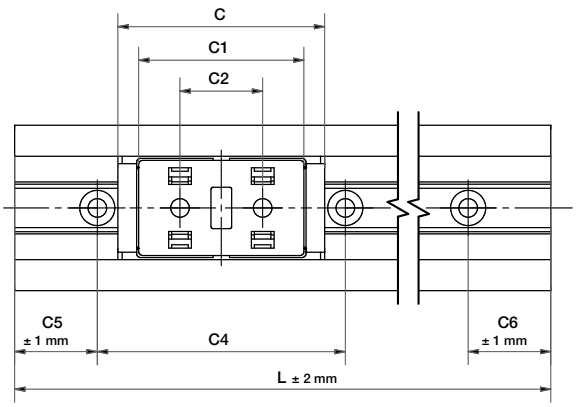

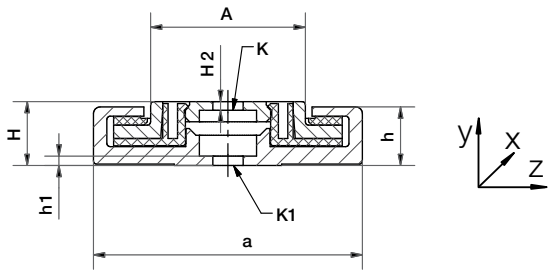

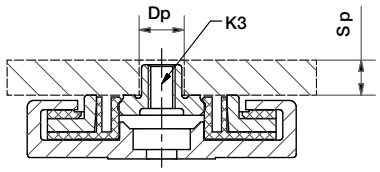

Selection aid – guide carriage

Part No.	Single	Double	Through hole	Threaded mounting boss	Threaded hole	Preload	Solid plastic	Clipped-on plastic liners	Overmolded plastic liner	High temp.
NW-01-40	●		●					●		
NW-01-40-P	●		●			●		●		
NW-11-40	●		●						●	
NW-02-40	●			●				●		
NW-02-40-P	●			●		●		●		
NW-12-40	●			●					●	

DryLin® N - Low-profile guide systems - Product range

Guide rails and carriages – size 40

Order key

Type	Size	Options
NW -	01 -	40 - P - LLY

DryLin® N Guide carriages

Carriage type

Rail width

Preload

Floating bearing in y-direction

Carriage type
See selection aid
Options
P = Preload
Floating bearing
LLY = Floating y-direction
LLZ = Floating z-direction
LLYZ = Floating yz-direction

All elements can be ordered individually or as assembled systems

Guide rail (standard / undrilled / AR black anodized) – dimensions [mm]

Part No.	L max.	a	C4	C5 = C6 min.	C5 = C6 max.	h	h1	K1[73]	Iy [mm⁴]	Iz [mm⁴]	Weight [g/m]
NS-01-40- ☐ [72]	3,000	40	60	20	49.5	8.7	1.3	Ø4.5	26,400	970	450
NS-01-40S- ☐ [72]	3,000	40	–	–	–	8.7	1.3	–	26,400	970	450
NS-01-40-AR- ☐ [72] (black anodized)	3,000	40	60	20	49.5	8.7	1.3	Ø4.5	26,400	970	450

[72] Please add the required length in mm , symmetrical standard hole pattern C5=C6
[73] For cap screw with low head (i.e. DIN 7984, DIN 6912, DIN 84, EN ISO 1707)

Guide carriage – dimensions [mm]

Part No.	H ±0.35	A	C	C1	C2	H2	K[73]	K3[74]	Sp	Dp	Weight [g]
NW-01-40	9.5	23.0	50	40	20	1.3	Ø4.5	–	–	–	30.0
NW-01-40-P	9.5	23.0	50	40	20	1.3	Ø4.5	–	–	–	30.0
NW-11-40	9.5	23.0	52	40	20	1.3	Ø4.5	–	–	–	30.0
NW-02-40	9.5	23.0	50	40	20	–	–	M4	5.0	6.5	30.0
NW-02-40-P	9.5	23.0	50	40	20	–	–	M4	5.0	6.5	30.0
NW-12-40	9.5	23.0	52	40	20	–	–	M4	5.0	6.5	30.0

[73] For cap screw with low head (i.e. DIN 7984, DIN 6912, DIN 84, EN ISO 1707)
[74] Metal thread

Order example:
NS-01-40-1500 = Guide rail, size 40, length 1,500 mm
NW-02-40-P-LLY = Guide carriage with threaded pin, size 40, preload, floating bearing in y-direction

DryLin® N - Low-profile guide systems - Product range

Size 80

Standard, anodized with holes

Anodized without holes

Black anodized, with holes

NW-12-80
Overmolded

NW-02-80
Zinc

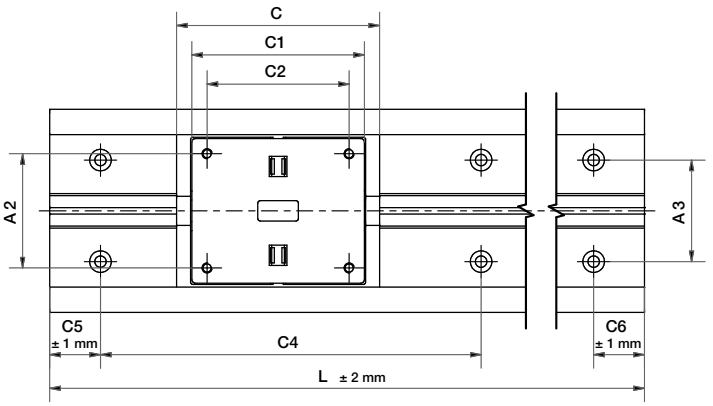

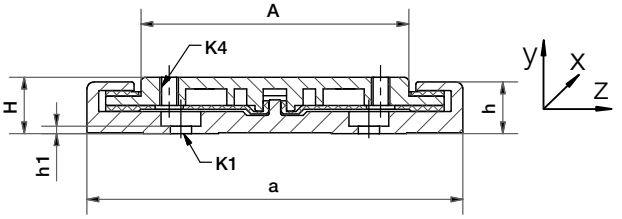

Selection aid – guide carriage

Part No.	Single	Double	Through hole	Threaded pin	With thread	Preload	Solid plastic	Clipped-on	Molded	High temp.
NW-02-80	●				●			●		
NW-12-80	●				●				●	

DryLin® N - Low-profile guide systems - Product range

Guide rails and carriages – size 80

Order key

Type	Size	Options
NW	02	80	LLY
DryLin® N	Guide carriages	Carriage type	Rail width	Floating bearing in y-direction

Carriage type
See selection aid
Options
Floating bearing
LLY = Floating y-direction
LLZ = Floating z-direction
LLYZ = Floating yz-direction

Guide rail (standard / undrilled / AR black anodized) – dimensions [mm]

Part No.	L	a	C4	A3	C5 = C6		h	h1	K1[73]	Iy	Iz	Weight
	max.				min.	max.				[mm⁴]	[mm⁴]	[g/m]
NS-01-80- □ [72]	4,000	80	150	40	25	99.5	11	1.5	Ø4.5	27,120	2,900	1,140
NS-01-80S- □ [72]	4,000	80	150	40	–	–	11	1.5	–	27,120	2,900	1,140
NS-01-80-AR- □ [72]	4,000	80	150	40	25	99.5	11	1.5	Ø4.5	27,120	2,900	1,140

[72] Please add the required length in mm , symmetrical standard hole pattern C5=C6
[73] For cap screw with low head (i.e. DIN 7984, DIN 6912, DIN 84, EN ISO 1707)

Guide carriage – dimensions [mm]

Part No.	H ±0.35	A	C	C1	C2	A2	K4[74]	Weight [g]
NW-02-80	12.0	57.0	80	68	56	45	M4	100.0
NW-12-80	12.0	57.0	83	68	56	45	M4	146.3
NW-02-80AL (Aluminum)	12.0	57.0	80	68	56	45	M4	72.0

[74] Metal thread

Order example:
NS-01-80-1500 = Guide rail, size 80, length 1,500 mm
NW-02-80-LLY = Guide carriage, clip-on, size 80, floating bearing in y-direction, suitable for size 80 guide rails

DryLin® N - Low-profile guide systems - Product range

Telescopic rails

- Solid A180 thermoplastic guide/aluminum rail
- Lightweight
- Low priced
- Corrosion resistant
- Continuous lengths up to 1,200 mm (total extension)

NT-35-“L” – Total extension

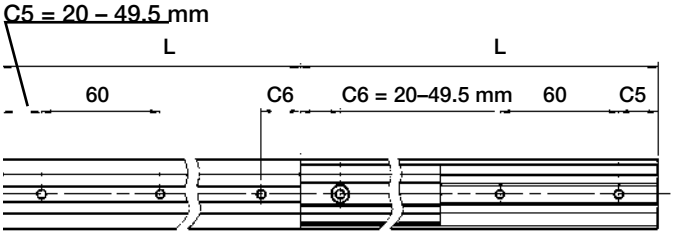

NT-35-”L”-”L+20” – Over-extension

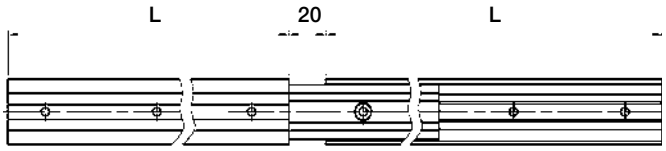

NT-35-”L”-”B” – Partial extension

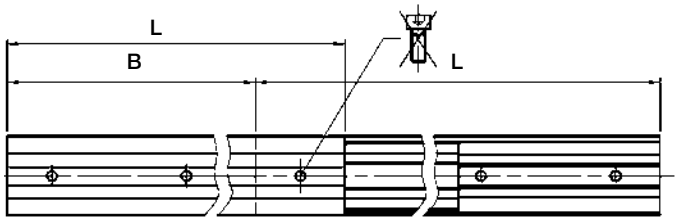

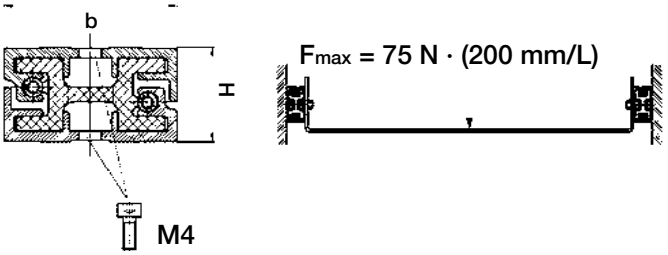

Order key

Type	Size
N T	- 35 - 300
DryLin® N	Telescopic system
Rails width	Length [mm]

Over extension order key

Type	Size	Option
N T	- 35 - 300	- 320
DryLin® N	Telescopic system	Rails width	Length [mm]	Over extension [mm]

Partial extension order key

Type	Size	Option
N T	- 35 - 300	- 200
DryLin® N	Telescopic system	Rails width	Length [mm]	Partial extension [mm]

Option:
Partial extension (e.g.: telescoped length 300 mm, extended length 500 mm)

Recommendation:
F_{max} calculated using this formula allows an easy manual use. The unit can take higher forces than this, but the required driving force will be correspondingly higher.

Dimensions [mm]

Part No.	b	H	L min.	L max.
NT-35-… mm	35	19	100	600

DryLin® N - Low-profile guide systems - Product range

Telescopic rails with locking mechanism

Order key

Type		Size	Option
N	T	- LM - 35	- 300
DryLin® N	Telescopic system	Locking mechanism	Rail width	Length [mm]

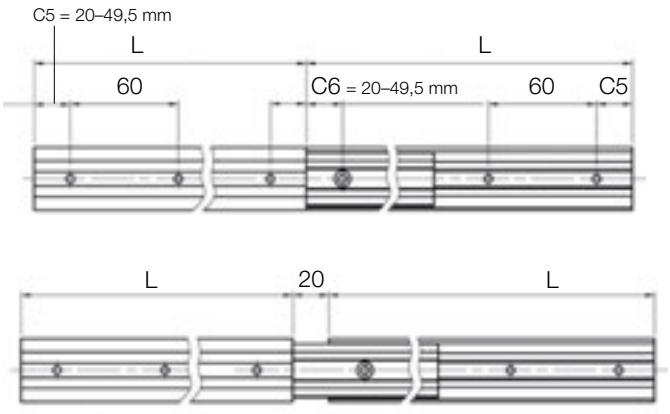

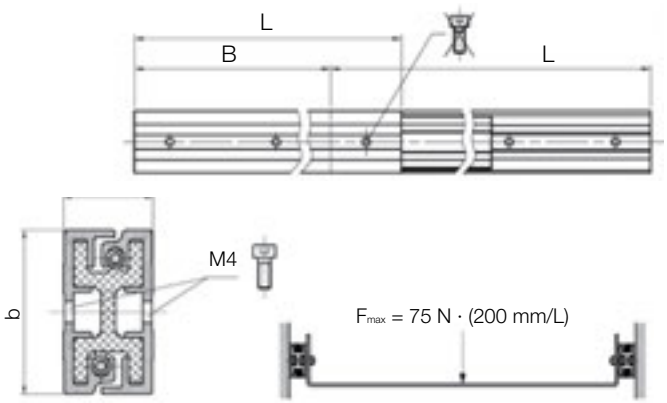

DryLin® NT LM in adjustment of Perspex guard

DryLin® NT LM in guard door adjustment in a machine tool

DryLin® detent in end and center position at full extension – Dimensions [mm]

Part No.	b	H	Lmin	Lmax
NT-LM-35-...mm	35	19	140	600

Individual position detent on request; The length divided by the locking distance must be an even number.
e.g. Lengths 250 mm, latching all 62.5 mm = 250 / 62.5 = 4

Order example:
NT-LM-35-300 = DryLin® N telescopic rail with locking mechanism, 35 mm width, retracted length 300 mm

DryLin® N - Low-profile guide systems - Product range

Accessories: Manual clamp for Size 27

Order key

Type			Size	Option
NW	- 02	- 27	- 80	- HKA
DryLin® N	Guide carriages	Carriage type	Rail width	Carriage length	Manual clamp

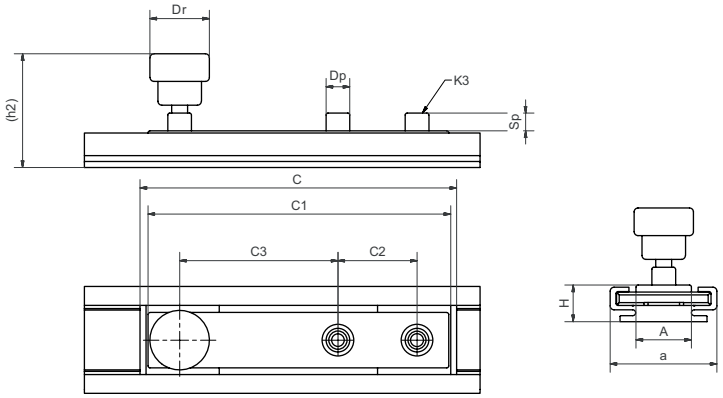

Dimensions [mm]

Part No.	H	(h2)	A	C	C1	C2	C3	K3	M	Sp	Dp	Dr	Weight [g]
NW-12-27-80-HKA	9.5	32	14	80	76	20	40	M4	1.2	5	6.5	15	32

Order example:
NW-12-27-80-HKA = Manual clamp for NW-12-27-80 carriage

DryLin® N - Low-profile guide systems - Product range

Accessories: End caps

Size 80 shown for example only

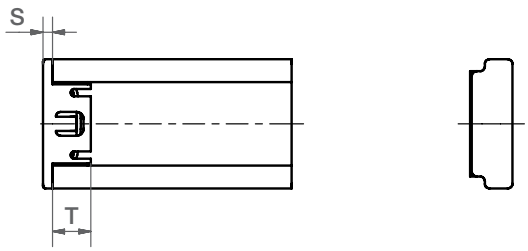

Order key

Type			Size
N	S	K	B - 40
DryLin® N – End caps	Plugged		Rail width

Dimensions [mm]

Part No.	S	T	for rail
NSKB-17	1.5	7	NS-01-17
NSKB-27	2	8	NS-01-27
NSK-40	1.5	8	NS-01-40
NSKB-80	2	17	NS-01-80

Order example:
NSK-40 = end caps for rail size 40, bolted

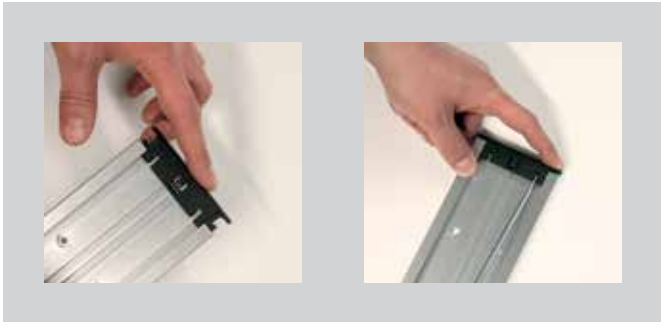

Easily assembled and disassembled by hand using a screw driver.
Part No.: NSKB

End caps for rail size 40, screwed
Part No.: NSK-40

Notes

DryLin® T Rail Guide Systems

- Corrosion-free
- Wear-resistant
- Low friction
- Extremely quiet operation
- Self-lubricating

DryLin® T - Rail guide systems - Advantages

Resistant to dirt, low vibration, low noise, long service life

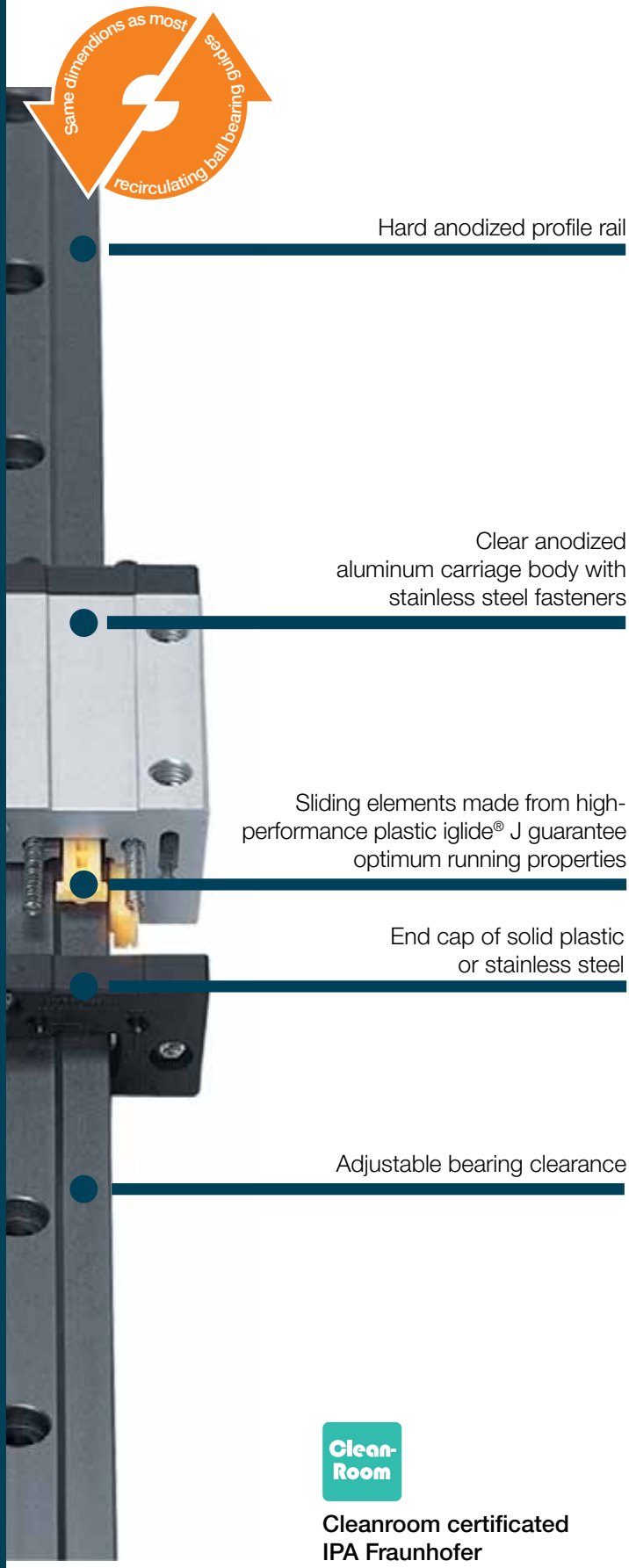

Self-lubricating rail guide systems - DryLin® T

DryLin® T guide rails are dimensionally interchangeable with recirculating ball guides, but offer cost-effective, maintenance-free operation. Series 01 offers higher loads, and the mini 04 series is ideal for use in tight design constraints and price sensitive applications. Both use iglide® J glide pads and hard-anodized aluminum rails for optimal friction and wear resistance.

- Adjustable clearance available
- Very resistant to dirt
- Very low coefficient of friction and wear

Typical application areas:

- Machine building
- Wood working industry
- Machine tools
- Handling,
- Lab automation

Lifetime calculation online
➤ **www.igus.com/drylin-expert**

max. +194°F (+90°C)
min. –40°F (-40°C)

4 sizes
7 carriage types
Rail lengths up to 4,000 mm

Detailed technical data
➤ **www.igus.com/drylinT**

Available from stock
Detailed information about delivery time online.

Clean-Room
Cleanroom certificated
IPA Fraunhofer

RoHS 2002/95/EC
Free of toxins
ROHS 2002/95/EC

ESD compatible
(electrostatic discharge)

DryLin® T - Rail guide systems - Product overview

Sliding instead of rolling

Automatic

- With a mechanism that automatically adjusts the bearing clearance after removal of the preload key and adjusts during operation
- Self-lubricating and maintenance-free
- Corrosion-resistant

➤ **Page 979**

Standard

- Supplied preset and can be put into operation at once
- Manual clearance adjustment or fine tuning
- Self-lubricating and maintenance-free
- Corrosion-resistant

➤ **Page 980**

With manual clamp

- Carriage with adjustable clearance (manual clearance adjustment)
- Maintenance free, dry-running
- Corrosion resistant

➤ **Page 981**

Heavy duty

- Used for the most extreme conditions (dirt, adhesive residues, chips, mud, etc.)
- Bolted aluminum cover plates mechanically secure bearing liners

➤ **Page 982**

Compact

- Narrow linear guide carriage for small installation space
- Plastic sliding elements are fixed in the cover plate and are therefore permanent
- Clear anodized and weight- reduced guide rail optionally available

➤ **Page 983**

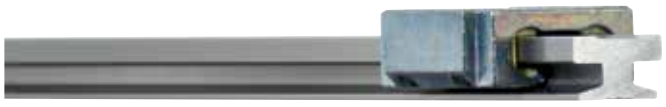

Miniature

- Small, compact, self-lubricating
- Adjustable clearance option

➤ **Page 984**

- Precision
- High corrosion resistance

➤ **Page 984**

Clamps

- Compact and strong clamps for all sizes – holding forces up to 500 N

➤ **Page 986**

DryLin® T - Rail guide systems - Application examples

Long service life and food-grade quality, along with the ability to stand up to humidity and harsh cleaning products, are all requirements for this application.

The adjustment of the pressure roller and adjustment of the of the grinding wheel balance are done here with DryLin® T in place of recirculating ball bearing guides.

The DryLin® T linear guide systems are used in these mail room machines to guide the suction cup opening mechanisms.

DryLin® T linear guide systems find balance between service life and costs despite the welding spatter and dust in this harsh application.

The height of this work table is adjusted quietly and precisely with the use of the DryLin® T rail guide systems

This measurement system must make quick, seamless tool changes in dusty environments, with major time savings through the use of DryLin® T.

DryLin® T - Rail guide systems - Online tools

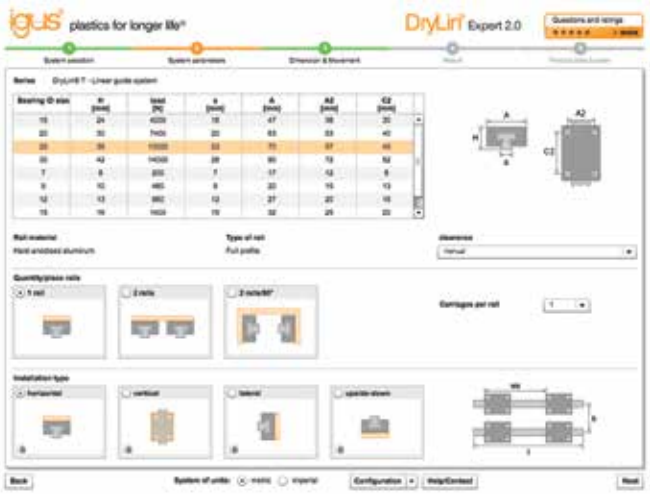

DryLin® expert - 2.0 system selections & service life calculation with CAD

A number of online tools, including configurators and service life calculators are available for DryLin® linear systems. Calculate required drive force and other technical details, and get direct access to CAD files and online ordering.

➤ **www.igus.com/drylin-expert**

DryLin® CAD configuration

Generate complete 3D models for DryLin® linear technology according to your specifications

The igus® CAD configurator gives your the ability to design and save your linear guide system, individual components directly as a 3D model in all commonly used formats, or have them sent via email - No costs or registration required.

➤ **www.igus.com/drylin-CAD**

Tightening torque for DryLin® connections between metal parts

Metric thread (Da)	Torque [Nm]	Recommended torque [Nm]
M4	1.0 - 2.8	1.5
M5	2.0 - 5.5	3.0
M6	4.0 - 10.0	6.0
M8	8.0 - 23.0	15.0
M10	22.0 - 46.0	30.0

DryLin® T - Rail guide systems - Design rules

DryLin® T - Floating Systems

Maximum float = .04" (1 mm)

Standard Version

Part-No. Standard
TW-01-15
TW-01-20
TW-01-25
TW-01-30

Horizontal Float "LLZ"

Part-No. Floating Horizontal
TW-01-15HF
TW-01-20HF
TW-01-25HF
TW-01-30HF

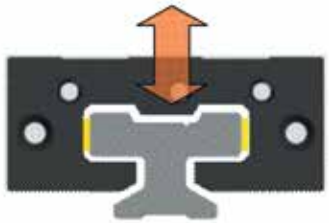

Vertical Float "LLY"

Part No. Floating Vertical
TW-01-15VF
TW-01-20VF
TW-01-25VF
TW-01-30VF

DryLin® T - Fixed and Floating Bearing Mounting Instructions

When using systems with 2 parallel rails, one side must be designated as the "fixed" rail, and the opposite side the "floating" rail.

Why use floating bearings?

- Promotes smooth gliding performance and maximizes bearing life
- Prevents binding caused by parallelism and angle errors
- Decreases necessary drive force and wear by minimizing friction-forces
- Enhances the precision of the system over the bearings' lifetime.
- Reduce assembly time and cost

Fixed Bearings

The "fixed" bearing rail should be positioned closest to the drive force. This rail will determine the precision of the system; no system should contain more than two "fixed" bearings.

Floating/Self-Aligning Bearings

The "floating" rail should be the rail located furthest from the drive force. It is to act only as a guide, and will compensate for any misalignments or angle errors in the system ensuring proper functionality.

Mounting Surfaces

The mounting surfaces for rails and bearings should have a very flat surface (for example: milled surface) in order to enhance performance. Variations in these surfaces may be compensated for by using floating bearings.

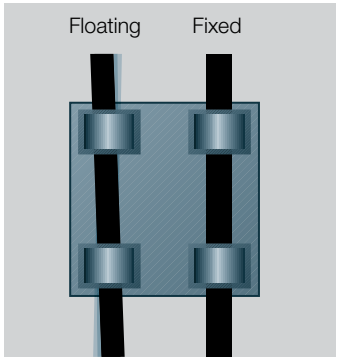

Automatic compensation of parallelism errors

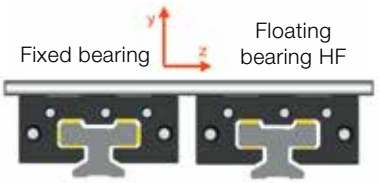

Installation variation horizontal with floating bearing in the Z-direction

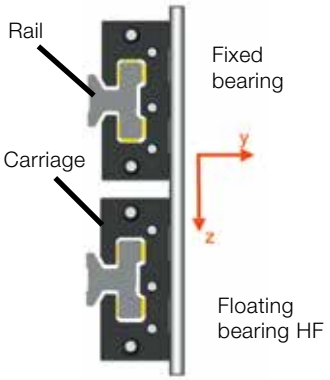

Installation variation lateral with floating bearing in the Z-direction

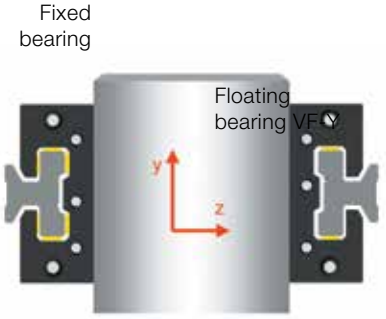

Horizontal mounting version with floating bearing in the Y-direction and lateral mounting carriage

Guide rails	
Material	Extruded aluminum
Material	6063-T6 or 6060-T66 (Al Mg Si 0.5)
Coating	Hard-anodized aluminum, 50 µm
Hardness	500 HV
Guide carriages	
Base structure	Extruded aluminum
Material	6060-T66 (Al Mg Si 0.5) / 6063-T6
Coating	Anodized aluminum
Sliding elements	Maintenance free plain bearing iglide® J
Bolts, springs	Stainless steel
End cap	Plastic (TW-01/TWA-01), steel (TW-02)
Max. surface speed	15 m/s
Temperature range	–40°F to +194°F (-40°C to +90°C)

Table 01: DryLin® – technical data

Type	C_{0Y} [kN]	$C_{0(-Y)}$ [kN]	C_{0Z} [kN]	M_{0X} [Nm]	M_{0Y} [Nm]	M_{0Z} [Nm]
04-07	0.2	0.2	0.1	1.2	0.6	0.6
04-09	0.48	0.48	0.24	3.4	1.8	1.8
04-12	0.96	0.96	0.48	9.2	4.4	4.4
04-12 (TWE)	0.48	0.48	0.24	4.6	2.2	2.2
04-15	1.4	1.4	0.7	17	8	8
04-15 (TWE)	0.7	0.7	0.35	8.5	4	4
01-15	4	4	2	32	25	25
01-/02-20	7.4	7.4	3.7	85	45	45
01-/02-25	10	10	5	125	65	65
01-/02-30	14	14	7	200	100	100

Table 02: DryLin® – permissible static load capacity

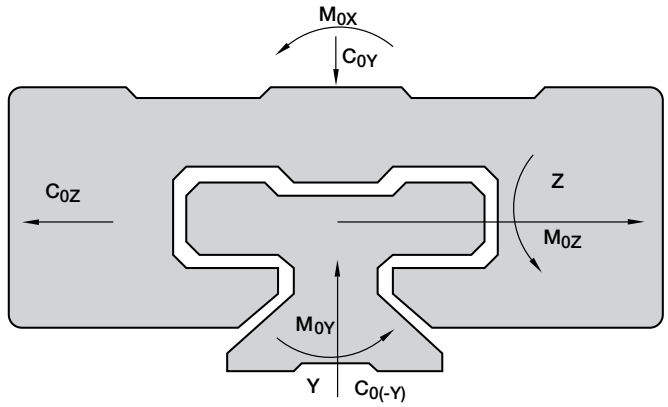

Diagram 01: Designation of load directions

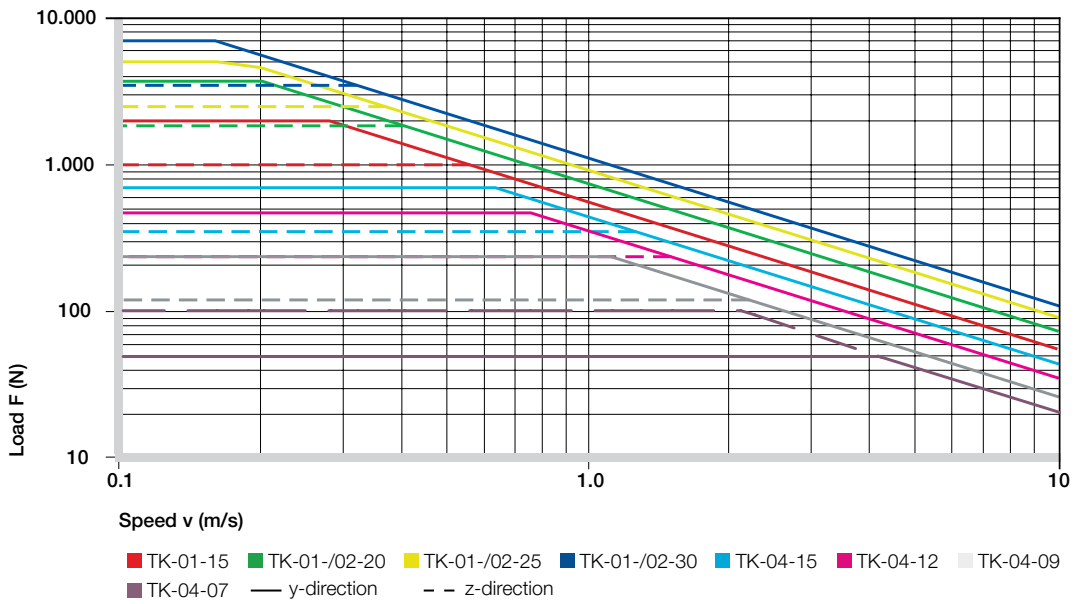

DryLin® T - Rail guide systems - Product range

Linear guide

TS-01-...

TS-11-...

NOTE: The hard anodized surface of DryLin rails and shafts is integral to the tribology of the bearings system - therefore variations in color, and superficial crazing under the anodic layer, may be occur.

Rails without mounting holes available

Hard anodized surfaces ➤ Page 888

Order key

Type					Options
TS	- 01	- 15	- 1000		- CA
Guide rails	Type 01	Installation size	Rail length [mm]		Clear anodized

Options
TS-01 = Standard rail
TS-11 = Lower weight hollow

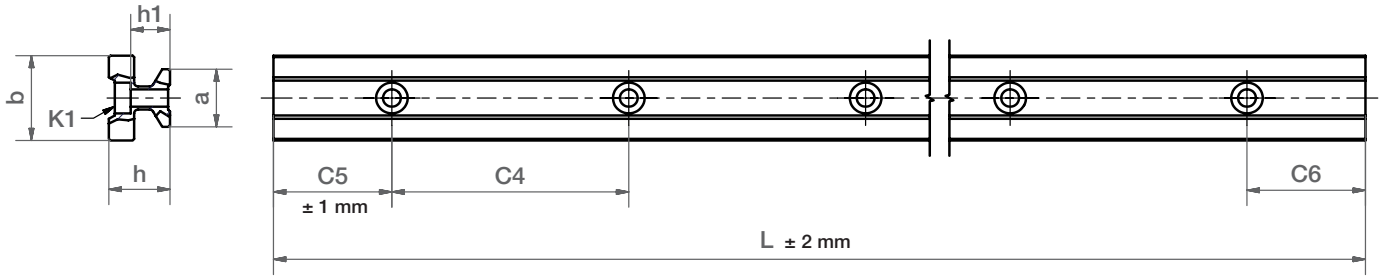

Dimensions [mm]

Part No.	Weight	L	a	C4	C5	C5	C6	C6	h	h1	K1 for screw DIN 912	b	Iy	Iz	Wby	Wbz
	[kg/m]	max.	–0.2		min.	max.	min.	max.					[mm⁴]	[mm⁴]	[mm³]	[mm³]
TS-01-15	0.6	4,000	15	60	20	49.5	20	49.5	15.5	10.0	M4	22	6,440	4,290	585	488
TS-01-20	1.0	4,000	20	60	20	49.5	20	49.5	19.0	12.3	M5	31	22,570	11,520	1,456	1,067
TS-11-20[76)]	0.5	4,000	20	120	20	79.5	20	79.5	19.0	12.3	M5	31	12,140	6,360	780	620
TS-01-25	1.3	4,000	23	60	20	49.5	20	49.5	21.5	13.8	M6	34	34,700	19,300	2,041	1,608
TS-01-30	1.9	4,000	28	80	20	59.5	20	59.5	26.0	15.8	M8	40	70,040	40,780	3,502	2,832

[76)] TS-11-20: Clear anodized and weight- reduced guide rail
Standard hole pattern symmetric C5 = C6
For rails without mounting holes, please use part number suffix “S”: TS-01-XXS
In North America these may be stocked in 12 ft lengths.

Can be combined with:

TW-01-...

TWA-01-...

TW-01-HKA

TW-02-...

TW-03-...

DryLin® T - Rail guide systems - Product range

Automatic clearance adjustment

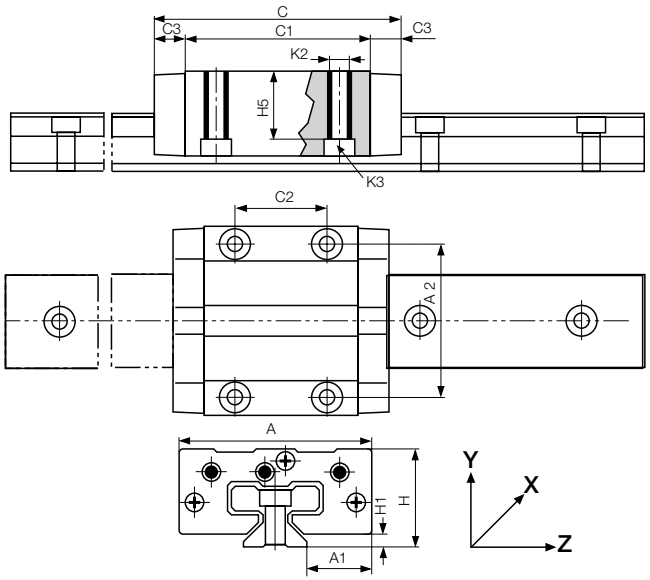

Order key

Type	Options

TWA - 01 - 15 - LLY

Guide carriages Automatic	Standard	Installation size	Floating bearing

Dimensions [mm]

Part No.	Weight [kg]	H ±0.35	A	C	A1 ±0.35	A2	C1	C2	C3	H1 ±0.35	H5	K2- Thread	Torque max. [Nm]	K3 for screw DIN 912
TWA-01-15	0.11	24	47	68	16.0	38	50	30	9	4.0	16.0	M5	1.5	M4
TWA-01-20	0.19	30	63	81	21.5	53	61	40	10	5.0	19.8	M6	2.5	M5
TWA-01-25	0.29	36	70	90	23.5	57	68	45	11	5.0	24.8	M8	6.0	M6
TWA-01-30	0.50	42	90	103	31.0	72	79	52	12	6.5	27.0	M10	15.0	M8

Order example:
TWA-02-20-LLY: guide carriage with automatic clearance adjustment, size 20 and floating bearing in y-direction

Can be combined with:

TS-01-...

DryLin® T - Rail guide systems - Product range

With manual clamp

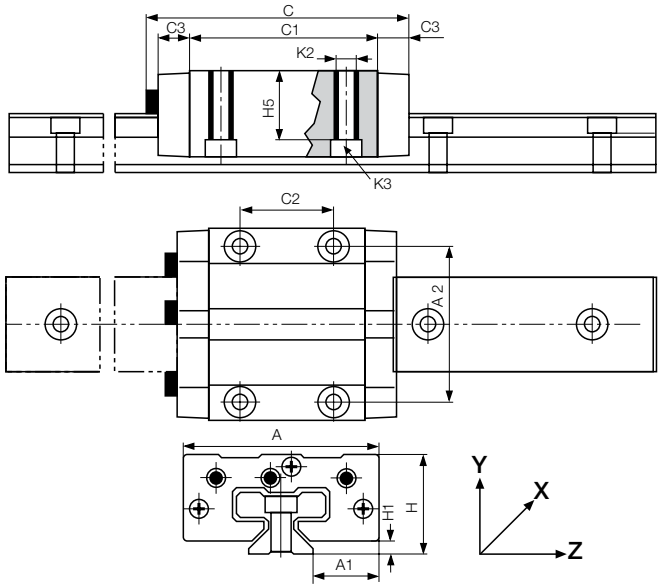

Order key

Type	Options

TW - 01 - 15 - LLY

- Guide carriages
- Manual clearance adjustment
- Height
- Floating bearing

Options

LLY = Floating bearing in y-direction
LLZ = Floating bearing in z-direction

Dimensions [mm]

Part No.	Weight [kg]	H ±0.35	A	C	A1 ±0.35	A2	C1	C2	C3	H1 ±0.35	H5	K2-thread	Torque max. [Nm]	K3 for screw DIN 912
TW-01-15	0.11	24	47	74	16.0	38	50	30	9	4.0	16.0	M5	1.5	M4
TW-01-20	0.19	30	63	87	21.5	53	61	40	10	5.0	19.8	M6	2.5	M5
TW-01-25	0.29	36	70	96	23.5	57	68	45	11	5.0	24.8	M8	6.0	M6
TW-01-30	0.50	42	90	109	31.0	72	79	52	12	6.5	27.0	M10	15.0	M8

Order example:
TW-01-15 LLY: standard guide carriage with manually adjustable clearance, size 15 and floating bearing in y-direction

Can be combined with:

TS-01-...

DryLin® T - Rail guide systems - Product range

Manual adjustable clearance with hand clamp

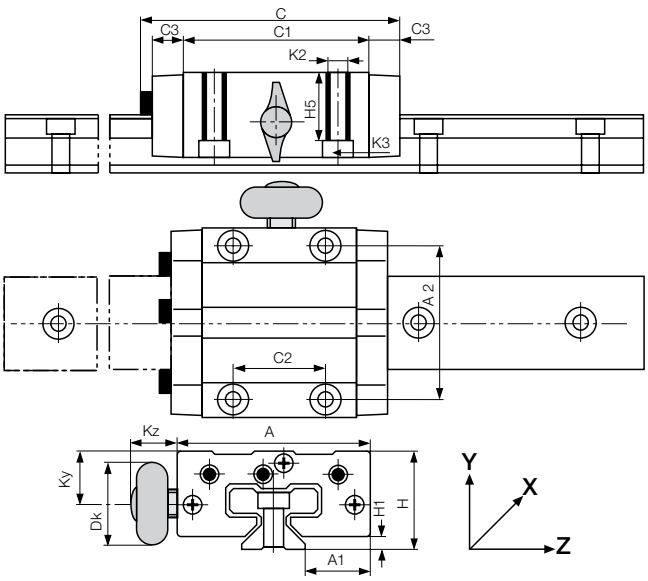

Order key

Type	Options
TW - 01 - 15 -	HKA

Guide carriages | Manual clearance adjustment | Installation size | Manual clamp

Dimensions [mm]

Part No.	Size	Kz	Ky	Dk	Clamp thread
TW-01-15-HKA	15	19.0	11.5	20.0	M6
TW-01-20-HKA	20	18.0	15.0	28.0	M8
TW-01-25-HKA	25	17.0	19.0	28.0	M8
TW-01-30-HKA	30	20.0	21.5	28.0	M8

Order example:
TW-01-15-HKA: guide carriage with manually adjustable clearance, size 15 with manual clamp

The manual clamp has been developed for simple tasks. The creep behavior of the clamped plastic causes a reduction in clamping force over time (up to 70%). Therefore safety-related parts should not be clamped. Please contact our applications consultant if you require other options for the clamping.

Can be combined with:

TS-01-...

DryLin® T - Rail guide systems - Product range

Heavy duty for extreme conditions (all metal structural components)

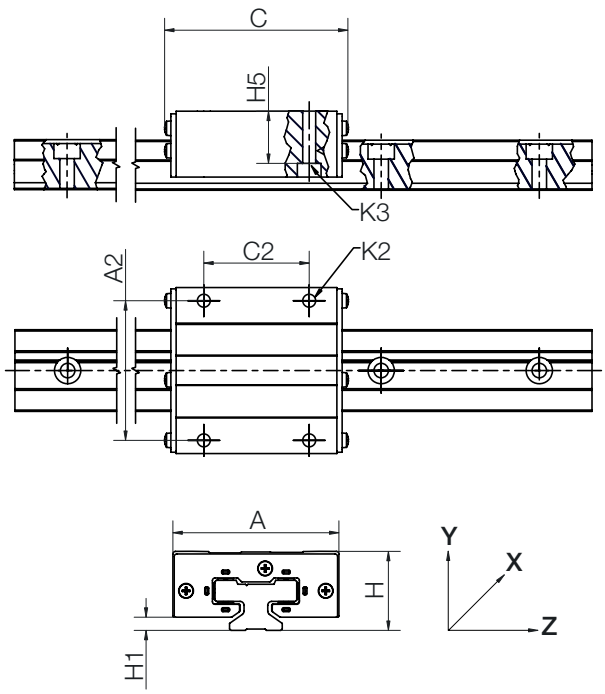

Order key

Type

TW - 02 - 20

Guide carriages

Heavy Duty

Installation size

Floating bearing on request

Dimensions [mm]

Part No.	Weight	H	H5	A	C	A2	C2	H1	K2	K3
	[kg]	±0.35						±0.35		
TW-02-20	0.19	30	19.8	63	70	53	40	5.0	M6	M5
TW-02-25	0.29	36	24.8	70	77	57	45	5.0	M8	M6
TW-02-30	0.50	42	27.0	90	92	72	52	6.5	M10	M8

Order example:
TW-02-20: heavy-duty guide carriage, size 20

Can only be combined with:

TS-01-...

DryLin® T - Rail guide systems - Product range

Compact for tough applications (all metal structural components)

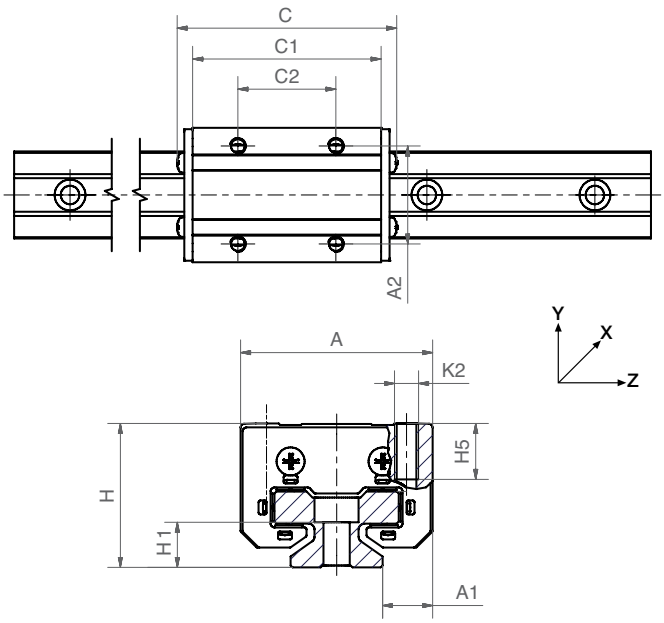

Order key

Type
TW - 03 - 25
Guide carriages
Compact
Installation size

Dimensions [mm]

Part No.	Weight	H	A	C	A1	A2	C1	C2	H1	H5	K2	Torque
	[kg]	±0.35						±0.35				max. [Nm]
TW-03-25	0.16	36	48	81	12.5	35	67.4	35	5	13	M6	6.0

Order example:
TW-03-25: compact guide carriage, size 25

Can only be combined with:

TS-01-20 TS-11-20

DryLin® T - Rail guide systems - Product range

Low-profile guide rails and carriages

NOTE: The hard anodized surface of DryLin rails and shafts is integral to the tribology of the bearings system - therefore variations in color, and superficial crazing under the anodic layer, may be occur.

Hard anodized surfaces ➤ Page 888

Order key

Type

TS - 04 - 07

Guide rails | Miniature | Installation size

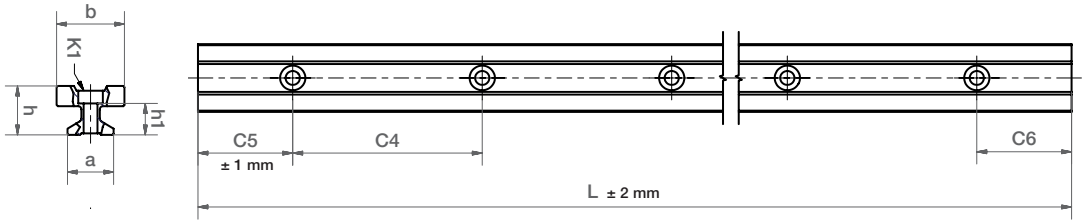

Dimensions [mm]

Part No.	Weight	L	a	C4	C5	C5	C6	C6	h	h1	K1 for screw	b	Iy	Iz	Wby	Wbz
	[kg/m]	max.	–0.2		min.	max.	min.	max.			DIN 912		[mm⁴]	[mm⁴]	[mm³]	[mm³]
TS-04-07	0.08	2,000	7	15	5	12	5	12	5.5	3.7	M2	8	131	90	32	29
TS-04-09	0.11	2,000	9	20	5	14.5	5	14.5	6.3	4.6	M2	9.6	252	169	52	49
TS-04-12	0.20	2,000	12	25	5	17.0	5	17.0	8.6	5.9	M3	13	856	574	132	120
TS-04-15	0.33	3,000	15	40	10	29.5	10	29.5	10.8	7.0	M3	17	2,420	1,410	285	239

Miniature carriage – standard

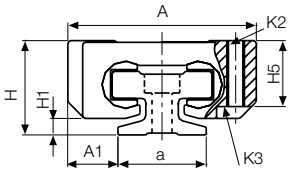

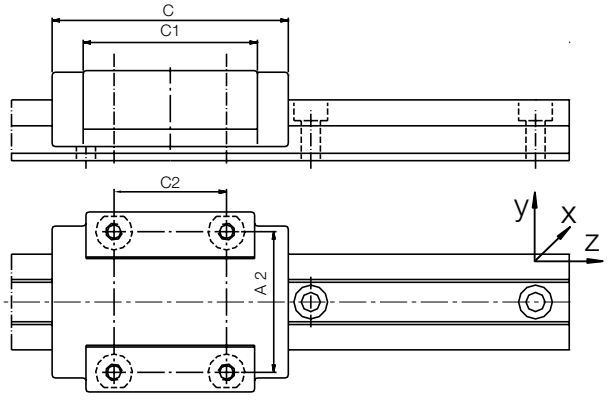

Dimensions [mm]

Part No.	Weight	H	A	C	A1	A2	C1	C2	H1	H5	K2 thread	Torque	K3 for screw
	[g]	±0.2	–0.2	±0.3	±0.35				±0.35			[Nm]	DIN 912
TW-04-07	8	8	17	23	5	12	21	8	1.5	-	M2	0.25	-
TW-04-09	17	10	20	29	5.5	15	18	13	1.7	7.2	M2	0.25	M2
TW-04-12	34	13	27	34	7.5	20	22	15	2.2	9.5	M3	0.50	M2 (M3)
TW-04-15	61	16	32	42	8.5	25	31	20	2.8	11	M3	0.50	M2 (M3)

DryLin® T - Rail guide systems - Product range

Miniature carriage – adjustable

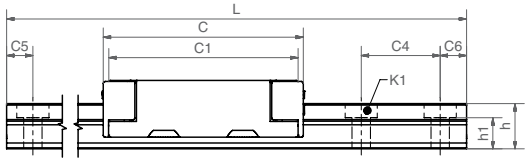

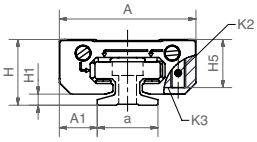

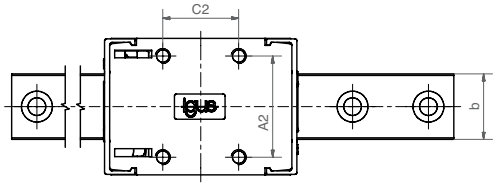

Order key

Type

TW E - 04 - 12

Guide carriages | Adjustable clearance | Miniature | Installation size

E-coated for corrosion resistance

Dimensions [mm]

Part No.	Weight	H	A	C	A1	A2	C1	C2	H1	H5	K2	K3 for screw
	[g]	±0.2	–0.2	±0.3	±0.35				±0.35		thread	DIN 912
TWE-04-12	36	12	27	38	7.5	20	36	15	2.2	9.5	M3	M2
TWE-04-15	61	16	32	45	8.5	25	31	20	2.8	11	M3	M2

Press in, turn, snap into place

Tool: 3 mm flat-head screwdriver

Right side: Insert screwdriver, and **depress** internal nut, and turn to set height clearance

Left side: Insert screwdriver, and depress internal nut, and turn to set lateral clearance

Can be combined with:

TS-04-...

DryLin® T - Rail guide systems - Product range

Manual clamps – compact

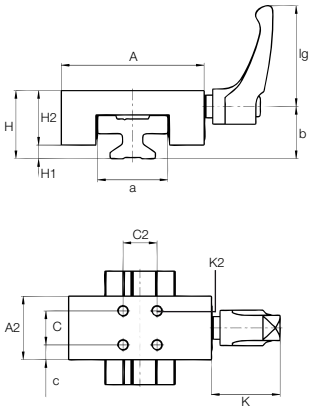

Pneumatic clamping on request

Order key

Type
TWBM - 11 - 25

Manual clamp	Compact design	Installation size

Options

11 = thin, compact design with plastic clamping elements

01 = solid design with brass clamping components, for size 25

Dimensions [mm]

Part No.	Clamp force [N]	A	a	A2	H	H1	H2	K	K2	C	C2	c	lg	b
TWBM-11-15	180	47	22	23	24	4	20	30	M4	15	15	4	44	18.9
TWBM-11-20	180	63	31	28	30	6	24	30	M5	15	15	6.5	44	23
TWBM-11-25	400	70	34	35	36	5	31	39	M6	20	20	7.5	63.63	26.2
TWBM-11-30	500	90	40	38	42	6.5	35.5	47	M6	20	20	9	78	32.4

Manual clamp – Brass - clamp design

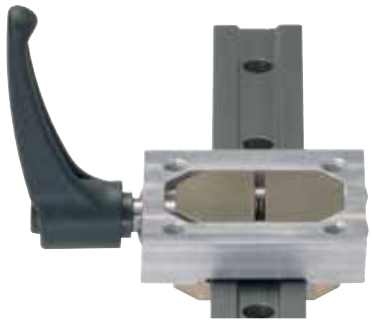

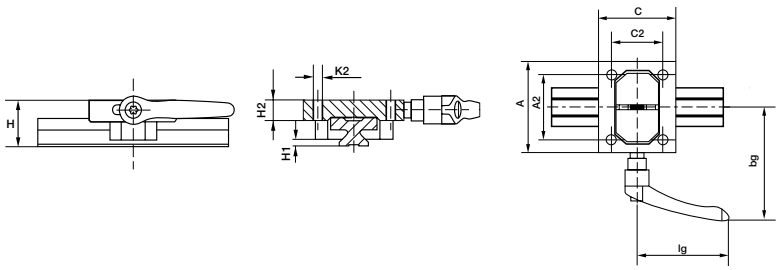

Dimensions [mm]

Part No.	Clamp force [N]	A	A2	H	H1	H2	K2	C	C2	lg	bg
TWBM-01-25*	500	80	57	36	5	16	M8	68	45	80	99

DryLin® T - Guide rails - Ordering options

Valid for guide carriages:
Optional: rails without bores available (suffix “S”).
Clear anodized rails optionally available (suffix "CA" for example: TS-01-15-CA).
Standard hole pattern symmetric C5 = C6

DryLin® T replacement liners (set)

Material iglide® J ➤ Page 115

Guide carriages	Part No. Sliding part set
TW-01-15	TEK-01-15
TW-01-20	TEK-01-20
TW-01-25	TEK-01-25
TW-01-30	TEK-01-30
TW-02-20	TEK-02-20
TW-02-25	TEK-02-25
TW-02-30	TEK-02-30
TW-04-09	TEK-04-09
TW-04-12	TEK-04-12
TW-04-15	TEK-04-15

DryLin® T end caps for series 01 guide rail holes:

Rail	Part No. End cap
TS-01-15	TSZ-011501
TS-01-20	TSZ-012001
TS-01-25	TSZ-012501
TS-01-30	TSZ-013001

When using the end caps, screws with a low screw head must be used to attach the rail.

DryLin® T - Adjusting and installation

Adjusting the clearance: DryLin® T

DryLin® T is delivered ready for installation. Clearance of the carriage is adjusted at the factory. The preadjustment is determined by the acting forces on each individual system. If necessary, clearance of the DryLin® T linear guide system can be readjusted. This should always take place when there is no load on the carriage.

1 After removing the protective cover, loosen the locknuts Width across flats:
- SW 5 for TW-01-15 and TW-01-20
- SW 7 for TW-01-25 and TW-01-30

2 Adjust the bearing clearance for the 3 guide points with an Allen key – Allen key size:
- 1.5 mm for TW-01-15 and TW-01-20
- 2.0 mm for TW-01-25 and TW-01-30

3 Check the clearance of the carriage after adjusting the 3 levels. If it is sufficient, tighten the locknuts and put on the cover.

4 There is a danger that excessive reduction of the clearances can seize the sliding pads and that the clearance cannot be reset simply by loosening the adjustment screws. The sliding pads are then released by pressing the reset button on the opposite side. Press hard against the readjusting spring. You must have already loosened the respective adjustment screws. Use the correct size pin for this purpose:
- 2.5 mm for TW-01-20 and TW-01-15
- 3.0 mm for TW-01-25 and TW-01-30

Video instructions available at www.igus.com

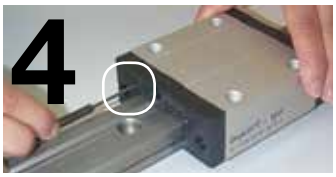

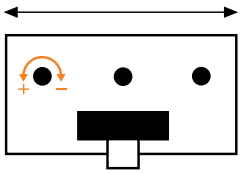

lateral guide:
– less clearance
+ more clearance

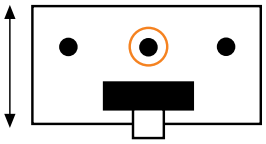

vertical guide left

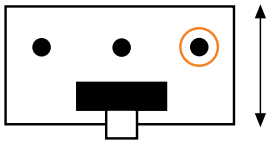

vertical guide right

DryLin® T - Adjusting and installation

Adjusting the clearance: DryLin® T Automatic

The DryLin® T Automatic series offers you an automatic adjustment of the clearance. A readjustment can take place automatically in steps of 0.1 mm. Springs tighten the regulating wedge immediately as soon as the clearance is bigger than 0.1 mm and the system is unloaded.

1 The system will be delivered with 3 keys and are necessary for mounting the carriage onto the rail. In case these keys are removed they need to be refitted into the openings and turned clockwise 90°.

2 After the carriage is on the rail, remove the keys by turning them counterclockwise 90° and pull out. The clearance will then be adjusted automatically.

3 You can remove the carriage at any time. In order to do so, simply plug the keys back into the carriage (see step 1).

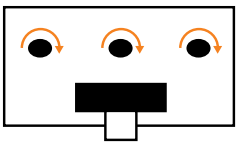

locked

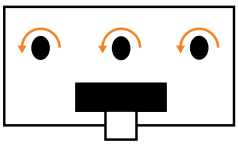

unlocked

DryLin® T - Adjusting and installation

Example of DryLin® T Calculation

For the exact calculation of the Linear Guide System it is essential to find out whether the position of the forces is within the allowable limits, and if the gliding element where the highest forces occur is not overloaded. The calculation of the necessary driving force and the maximum speed allowed is important. Each mounting version requires a different formula for calculation. Factors concerning shocks and acceleration forces are not included in the calculation, therefore the maximum load and allowable load must be monitored.

Variables in the Calculation:

Fa	:	Drive Force (lbs)
Fs	:	Applied Mass Force (lbs)
Fy, Fz	:	Bearing Load (lbs)
		in y or z direction (mm)
sx, sy, sz	:	Distance of the mass force in y or z direction (mm)
ay, az	:	Distance of the drive force in y or z direction (mm)
wx	:	Distance between carriages on a rail (mm)
LX	:	Constant from table (mm)
Zm	:	Constant from table (mm)
Y0	:	Constant from table (mm)
b	:	Distance between guide rails (mm)
µ	:	Coefficient of Friction,
		µ = 0 for static Loads
		µ = 0.2 for dynamic loads
ZW	:	number of carriages per rail

	1 Rail 1 Carriage	1 Rail 2 Carriages	2 Rails 3-4 Carriages
K_1	(ay+Y0)/Lx	(ay+Y0)/Wx	(ay+Y0)/Wx
K_2	(sy+Y0)/Lx	(sy+Y0)/Wx	(sy+Y0)/Wx
K_3	az/Lx	az/Wx	az/Wx
K_4	sx/Lx	sx/Wx	sx/Wx
K_5	sz/Lx	sz/Wx	sz/Wx
K_6	(sy+Y0)/Zm	(sy+Y0)/Zm	(sy+Y0)/b
K_7	sz/Zm	sz/Zm	(sz/b)-0.5

Part #	LX (mm)	ZM (mm)	Y0 (mm)
TW-01-15	41	16	11.5
TW-01-20	51	23	15.0
TW-01-25	56	25	19.0
TW-01-30	65	29	21.5

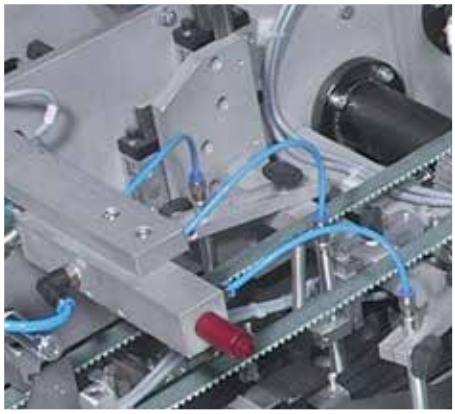

DryLin® T linear guide systems are used in these enveloping machines to guide a suction opener for envelopes . The guide system must have low clearance, be maintenance-free and not require any external lubrication.

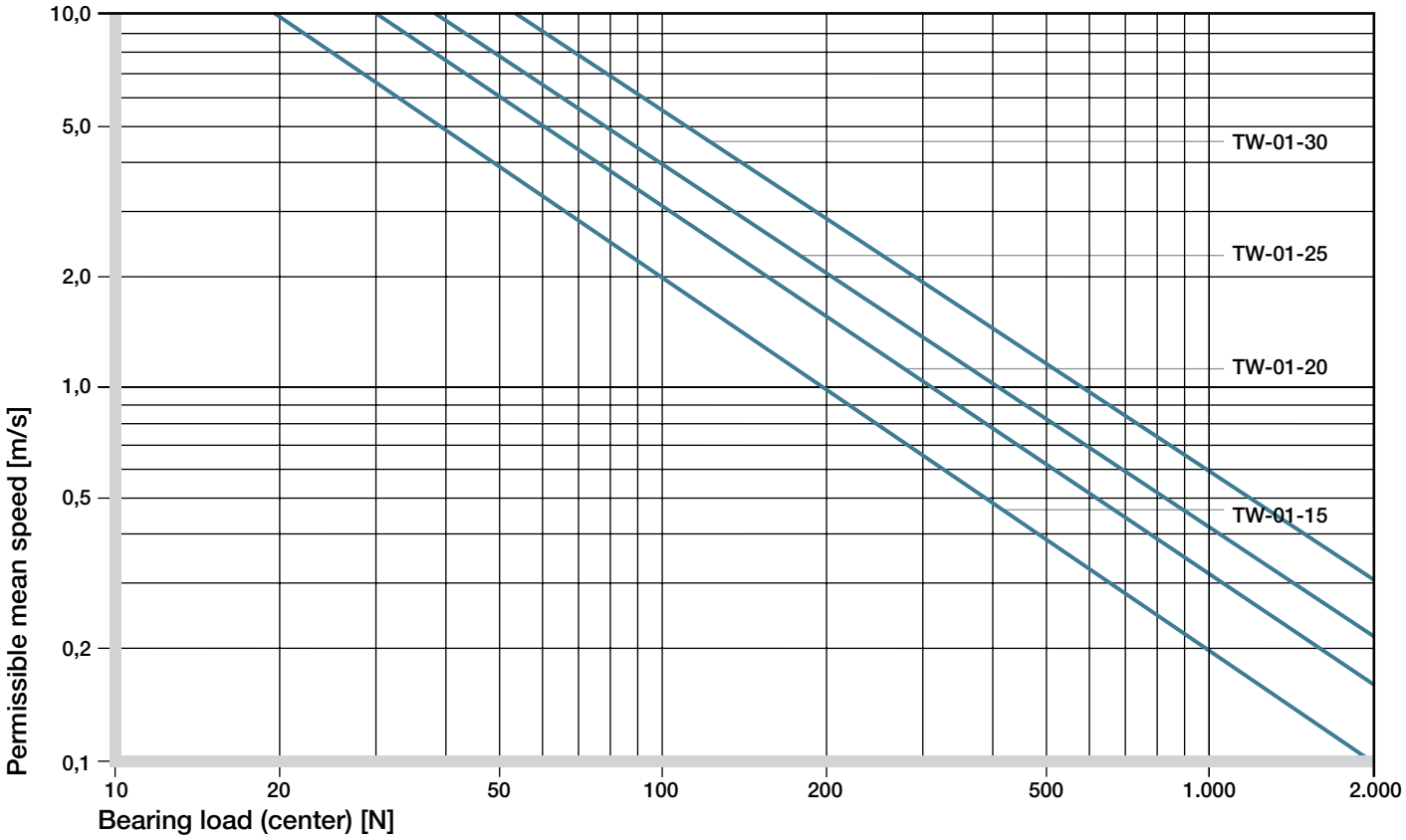

Diagram 04: Diagram to determine the maximum permissible speed for the calculated bearing load

Part No.	Fymax, Fzmax [N]
TW-01-15	2,000
TW-01-20	3,700
TW-01-25	5,000
TW-01-30	7,000

Table 03: maximum permissible load per sliding element

DryLin® T - Mounting version horizontal

Recommended Procedure:

1st Step

Select the mounting version:

- **horizontal**
  - 1 rail and 1 carriage
  - 1 rail and 2 carriages
  - 2 rails and 4 carriages

2nd Step

Check to see whether the maximum distances of the applied forces are within the permissible values (see Maximum permissible distances.)

Maximum permissible distances between acting forces:

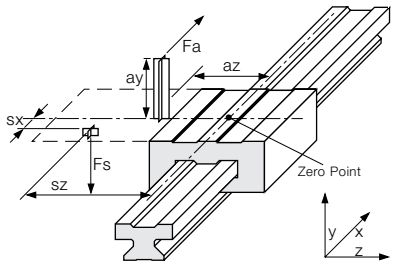

Variation: 1 Rail, 1 Carriage

sy + sz	<	2 Lx - Y0
ay + az	<	2 Lx - Y0
sy	<	5 Zm
sz	<	5 Zm

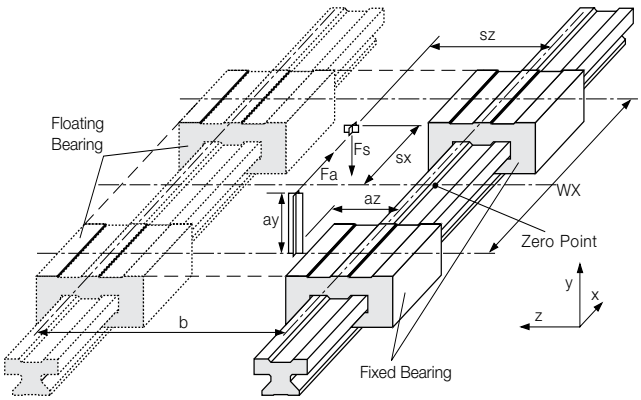

Variation: 1 Rail, 2 Carriages
Variation: 2 Rails, 4 Carriages

sy + sz	<	2 wx - Y0
ay + az	<	2 wx - Y0

3rd Step:

Calculate the necessary drive force

3.1 Center of gravity in **x** and **z direction inside** the carriage(s)

$$Fa_1 = \frac{\mu}{1-2\mu K_3} \cdot Fs$$

3.2 Center of gravity in **z direction outside** of the carriage(s)

$$Fa_2 = \frac{2\mu K_7}{1-2\mu K_3} \cdot Fs$$

3.3 Center of gravity in **x direction outside** of the carriage(s)

$$Fa_3 = \frac{2\mu K_4}{1-2\mu K_3-2\mu K_1} \cdot Fs$$

If the position of the center of gravity is not specified: $Fa = MAX\ (Fa_1, Fa_2, Fa_3)$

4th Step:

Calculate the maximum bearing load

4.1 Maximum bearing load in the **y direction**

$$Fy_{max} = \frac{2Fs}{Zw}\left(\frac{2K_4}{Zw} + 0{,}5\right) \cdot \left(K_7 + 0{,}5\right) + \frac{2Fa\,K_1}{Zw^2}$$

4.2 Maximum bearing load in the **z direction**

$$Fz_{max} = \frac{4Fa\,K_3}{Zw^2}$$

5th Step:

Check calculated load for both y and z with table on page 990 - Maximum permissible load for Fy max & Fz max. This table illustrates the maximum permissible load on a single gliding element from the DryLin® T carriage. Evaluating the maximum load on a single gliding element establishes a safety factor for the linear system. ➤ **Page 990**

6th Step:

Determine the maximum permissible speed for the calculated load from Step No. 4 ➤ **Page 990**

DryLin® T - Mounting version lateral

Recommended Procedure:

1st Step

Select the mounting version:

- **side-mounting**

  1 rail and 1 carriage

  1 rail and 2 carriages

  2 rails and 4 carriages

2nd Step

Check to see whether the maximum distances of the applied forces are within the permissible values (see Maximum permissible distances.)

Maximum permissible distances between acting forces:

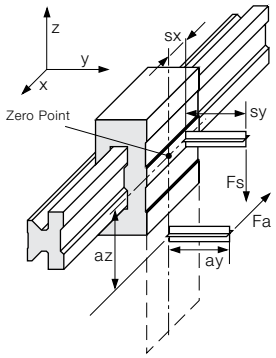

Variation: 1 Rail, 1 Carriage

sy + sz	<	2 Lx - Y0
ay + az	<	2 Lx - Y0
sy	<	5 Zm
sz	<	5 Zm

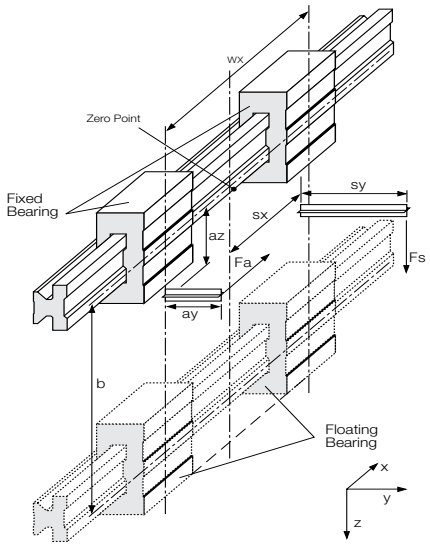

Variation: 1 Rail, 2 Carriages
Variation: 2 Rails, 4 Carriages

sy + sz	<	2 wx - Y0
ay + az	<	2 wx - Y0

3rd Step:

Calculate the necessary drive force

First, two calculations must be made:

$$Fa_1 = \frac{(1+2K_6)\mu}{1-2\mu K_1} \cdot Fs \qquad Fa_2 = \frac{(2K_4+2K_6)\mu}{1-2\mu K_1-2\mu K_3} \cdot Fs$$

The drive force Fa corresponds to the calculated maximum value $Fa = MAX(Fa_1, Fa_2)$

4th Step:

Calculate the maximum bearing load

4.1 Maximum bearing load in the **y direction**

$$Fy_{max} = \frac{Fs\,K_6}{Zw} + \frac{2Fa\,K_1}{Zw^2}$$

4.2 Maximum bearing load in the **z direction**

$$Fz_{max} = \frac{2Fs}{Zw}\left(\frac{2K_4}{Zw} + 0.5\right) + \frac{4Fa\,K_3}{Zw^2}$$

5th Step:

Check calculated load for both y and z with table on page 990 - Maximum permissible load for Fy max & Fz max. This table illustrates the maximum permissible load on a single gliding element from the DryLin® T carriage. Evaluating the maximum load on a single gliding element establishes a safety factor for the linear system. ➤ **Page 990**

6th Step:

Determine the maximum permissible speed for the calculated load from Step No. 4 ➤ **Page 990**

DryLin® T - Mounting version vertical

Recommended Procedure:

1st Step

Select the mounting version:

- **vertical**

  1 rail and 1 carriage
  1 rail and 2 carriages
  2 rails and 4 carriages

2nd Step

Check to see whether the maximum distances of the applied forces are within the permissible values (see Maximum permissible distances.)

Maximum permissible distances between acting forces:

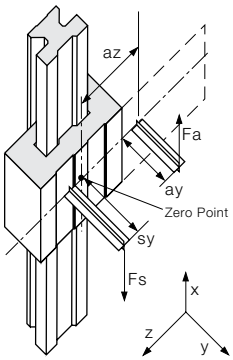

Variation: 1 Rail, 1 Carriage

sy + sz	<	2 Lx - Y0
ay + az	<	2 Lx - Y0
sy	<	5 Zm
sz	<	5 Zm

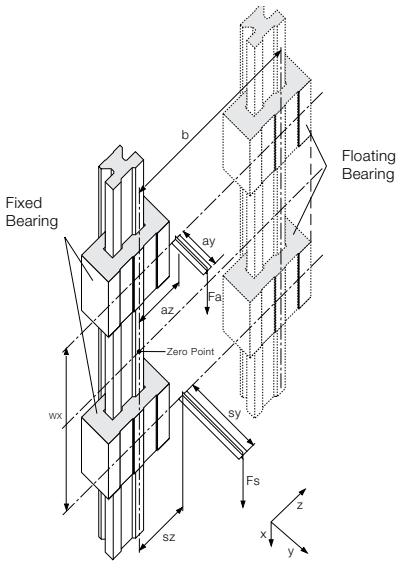

Variation: 1 Rail, 2 Carriages
Variation: 2 Rails, 4 Carriages

sy + sz	<	2 wx - Y0
ay + az	<	2 wx - Y0

3rd Step:

Calculate the necessary drive force

First, four calculations must be made:

$$Fa_1 = \frac{2\mu\,(sz+sy+Y_0)-wx}{2\mu\,(az+ay+Y_0)-wx} \cdot Fs \qquad Fa_3 = \frac{2\mu\,(sz-sy-Y_0)-wx}{2\mu\,(az-ay-Y_0)-wx} \cdot Fs$$

$$Fa_2 = \frac{2\mu\,(-sz+sy+Y_0)-wx}{2\mu\,(-az+ay+Y_0)-wx} \cdot Fs \qquad Fa_4 = \frac{2\mu\,(sz+sy+Y_0)+wx}{2\mu\,(az+ay+Y_0)+wx} \cdot Fs$$

The drive force Fa corresponds to the calculated maximum value $Fa = MAX\,(Fa_1, Fa_2, Fa_3, Fa_4)$

4th Step:

Calculate the maximum bearing load

4.1 Maximum bearing load in the **y direction**

$$Fy_{max} = \left| Fa\,\frac{ay+Y_0}{wx} - Fs\,K_2 \right| \cdot \frac{2}{Zw^2}$$

4.2 Maximum bearing load in the **z direction**

$$Fz_{max} = \left| Fa\,\frac{az}{wx} - Fs\,K_5 \right| \cdot \frac{4}{Zw^2}$$

5th Step:

Check calculated load for both y and z with table on page 990 - Maximum permissible load for Fy max & Fz max. This table illustrates the maximum permissible load on a single gliding element from the DryLin® T carriage. Evaluating the maximum load on a single gliding element establishes a safety factor for the linear system. ➤ **Page 990**

6th Step:

Determine the maximum permissible speed for the calculated load from Step No. 4 ➤ **Page 990**

DryLin® R Round Shaft Guide Systems

- Self-lubricating
- Maintenance-free
- Corrosion-free
- Resistant to dirt
- Low weight
- Dimensionally interchangeable with recirculating ball bearings

DryLin® R Round Shaft Guide Systems - Advantages

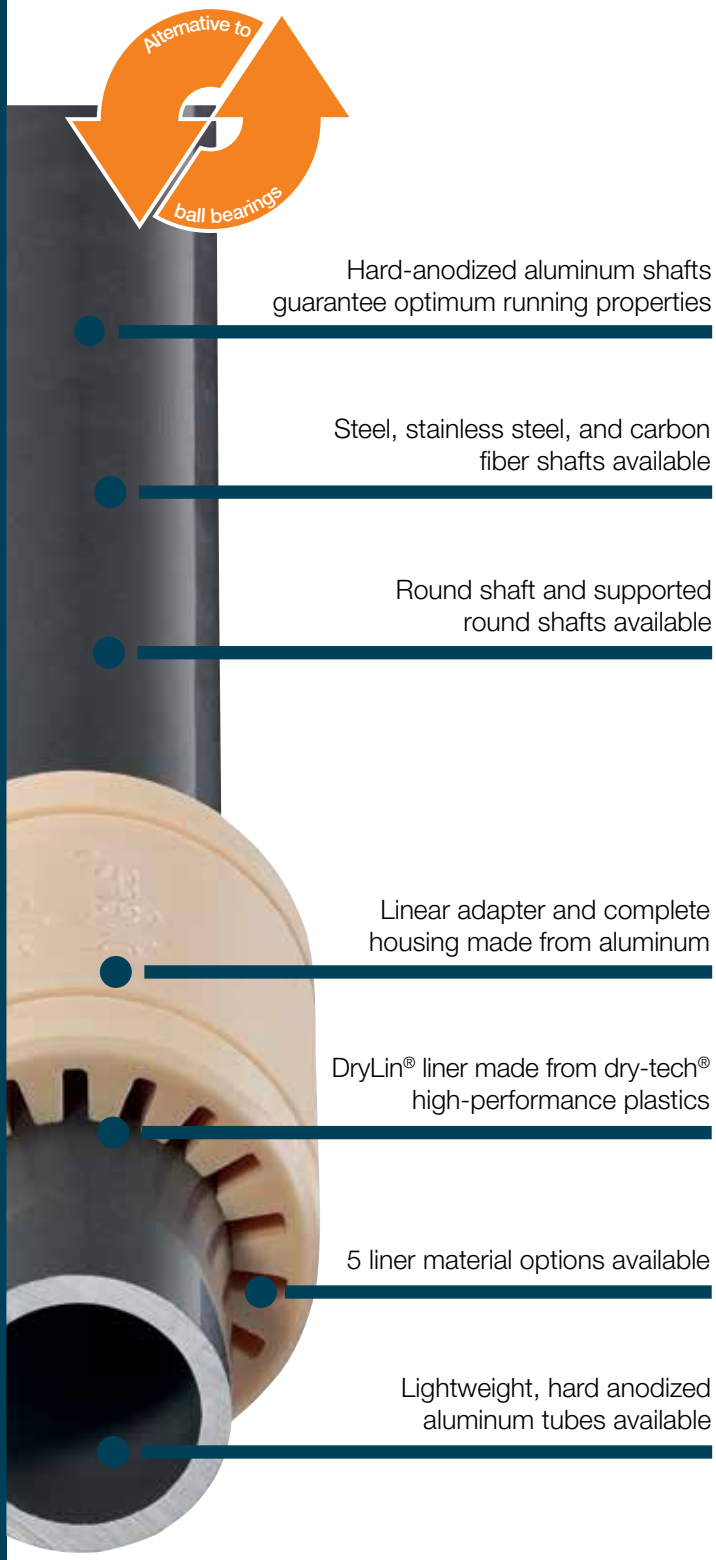

Self-lubricating round shaft guide systems – DryLin® R

DryLin® R is dimensionally interchangeable with linear ball bearings, but offers cleaner, more cost-effective results even in harsh environments. The standard RJUI/RJUM bearing consists of an iglide® J liner slip-fit into an aluminum housing. The unique grooved design of the J liner minimizes clearance, is suitable for use in extremely wet and dirty environments, and is easily replaceable. Dimensionally interchangeable 100% plastic parts RJI/RJM/RJIP/RJMP are also available for cost-savings, weight reduction, and other technical advantages. DryLin® R bearings may also be used with high temperature and chemically resistant iglide® T500 (X)* (TUI/TUM) liners for more demanding applications, and E7 material liners for steel and stainless shafting.

- 100% self-lubricating
- Dimensionally interchangeable with standard recirculating ball bearings
- Large variety of housing options
- Shafts, shaft-end supports and accessories available
- Replaceable bearing liner
- 300 series stainless steel housing available

Typical application areas:
- Packaging
- Lab
- Kiosk
- 3D Printing

Lifetime calculation online
➤ www.igus.com/DryLin-expert

max. +482°F (+250°C)
min. -130°F (-90°C)
(depending on material)

8 shaft materials
8 versions
Inner-Ø up to 60 mm

Inch dimensions available

Available from stock
Detailed information about delivery time online

Clean-Room
Cleanroom certified
IPA Fraunhofer

RoHS 2002/95/EC
Free of toxins
ROHS 2002/95/EC

ESD-compatible
(electrostatic discharge)

DryLin® R Round Shaft Guide Systems - Product overview

Liners and pressfit bearings

- Low friction, optimized wear quality
- Space saving, lightweight
- High chemical resistance

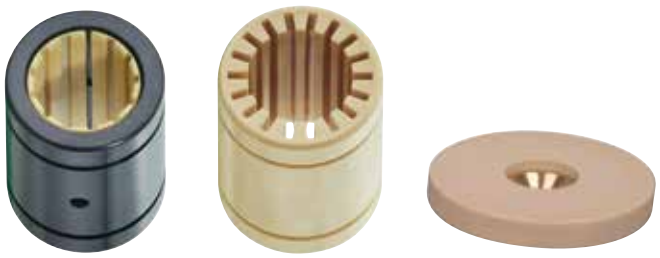

Linear plain bearing

- Aluminum or stainless steel adapter with iglide® material liner
- Solid iglide® plastic bearings available, dimensionally interchangeable with recirculating ball bearings
- Closed or open versions available
- Self-aligning
- Sliding discs available

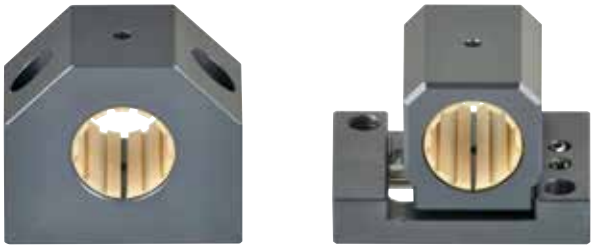

Pillow blocks and floating pillow blocks

- Easy to assemble
- Stands up to high static load
- Replaceable bearing liners
- Split housing for quick liner replacement available

Open linear plain bearings

- For supported loads using supported shafting
- Round or mounted design
- Adjustable options
- Optional floating bearing for quick assembly and design optimization

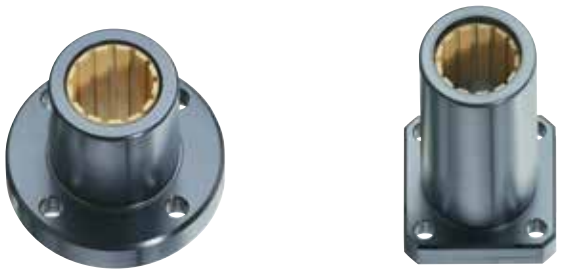

Flange bearing

- Easy to fit
- Round or square options available
- Standard or twin flange designs

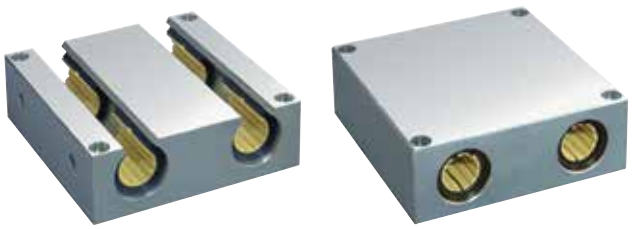

Quad block

- Closed or open design options
- Quad block housing with 4 bearing liners
- Floating bearing available

DryLin® R - Application Examples

DryLin® R linear plain bearings on supported aluminum shafts are used in the guide for this cutting table. The DryLin® components stand up to the high levels of dust and dirt, and offer accurate, smooth operation.

This saw mill uses a DryLin® linear bearing with iglide® J plastic liner for the angle stops.

This heavy duty application has run reliably for more than three years thanks to DryLin® RJUM-01 linear bearings

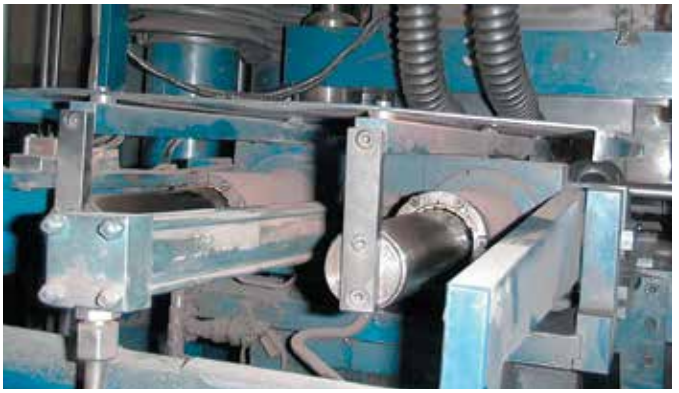

Despite the high stresses from abrasive particles and powder particles, this compactor unit can extend maintenance-free uptime by up to two years after switching to DryLin® R linear bearings.

Maintenance-free, precise, compact, and wear resistant bearing liners were mounted directly in the passages of this machine's frame.

To enable fast, and precise adjustment of a production line without the need for downtime, DryLin® precision linear guides were utilized.

DryLin® expert - 2.0 system selections & service life calculation with CAD

A number of online tools, including configurators and service life calculators are available for DryLin® linear systems. Calculate required drive force and other technical details, and get direct access to CAD files and online ordering.

➤ **www.igus.com/drylin-expert**

DryLin® CAD configuration

Generate complete 3D models for DryLin® linear technology according to your specifications

The igus® CAD online configurator gives you the ability to design and save your linear guide system, individual components directly as a 3D model in all commonly used formats, or have them sent via email – No costs or registration required.

➤ **www.igus.com/DryLin-CAD**

DryLin® R - Technical data

DryLin® R linear plain bearings

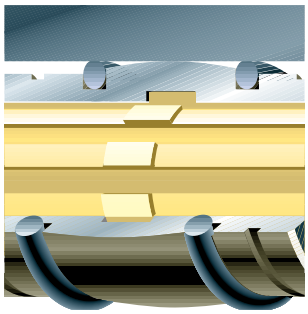

The DryLin® standard round bearings consist of a replaceable iglide® J, J200, A180 or T500 (X)* bearing liner, manufactured to fit securely into an anodized aluminum bearing housing, axially secured via a snap ring groove. DryLin® linear bearings are designed as dimensionally interchangeable with standard ball bearings. Made of highly wear resistant iglide® J, J200, A180 or T500 (X)* materials, which offer technical advantages as well as cost savings. Plastic bearings are well suited for applications where machine components are primarily stainless steel, such as in food production and packaging equipment, as well as applications where weight savings are critical. DryLin® R linear plain bearings are designed to fit housings with our recommended tolerances, secured via circlips in the same way as ball bearings.

Dirt, dust, fibers

An important feature of all the linear plain bearings is their tolerance of dirt and other abrasive particles. For most conventional bearing systems, the use of wiper or seals is recommended to prevent the accumulation of dirt. With DryLin®, the patented design of the bearing surface, which uses connected slide pads, provides performance benefits for dirty environments. Dirt, even if it becomes wet on the shaft, is wiped away by the individual slide pads and is wiped to an open area. The running sections of the DryLin® bearings then slide on the shaft that has been cleared of all contaminants.

Split linear bearings

Applications on the edge of technical feasibility or in extreme environments often require frequent replacement of linear bearings. DryLin® linear bearings can provide significant increases in service life, and even when replacement is necessary, the replaceable bearing liners can offer substantial cost savings. Replacing only the bearing's liner can reduce maintenance time by 90%. The range of split bearing housings are easily opened, and the split shell means that the shafts are able to stay in place while a new bearing and liner can be installed around the shaft, keeping installation time to a minimum.

	The "all-rounder" – iglide® J	The specialist – iglide® J200	The extreme – iglide® T500 (X)	The marathon runner – iglide® E7	FDA compliant – iglide® A180
Optimal shaft material(s)	all shaft materials	Aluminum, hard anodized	Hardened stainless steel Hard chromed plated steel	Steel stainless steel shaft	all shaft materials
Application temperature	-40°F to +194°F (-40°C to +90°C)	-40°F to +194°F (-40°C to +90°C)	-148°F to +482°F (-100°C to +250°C)	-40°F to +194°F (-40°C to +90°C)	-40°F to +194°F (-40°C to +90°C)
Best coefficient of friction with	Steel shaft	Aluminum, hard anodized	Steel hard chrome-plated	Steel stainless steel shaft	Stainless steel shaft
Maximum life time	Aluminum, hard anodized	Aluminum, hard anodized	Hardened stainless steel	Steel stainless steel shaft	Stainless steel shaft
Permissible stat. surface pressure	35 MPa	23 MPa	150 MPa	18 MPa	28 MPa
Moisture absorption	1.3% weight	0.7% weight	0.5% weight	< 0.1% weight	0.2% weight
Volume resistance	> 10^{13} Ωcm	> 10^{8} Ωcm	< 10^{5} Ωcm	> 10^{9} Ωcm	> 10^{12} Ωcm
Part No.	JUM-...	J200UM-...	TUM-.../XUM-...	E7UM-...	A180UM-...

DryLin® R - Design standards

Eccentric Forces

The 2:1 Rule

When using linear plain bearings it is important to ensure that the acting forces follow the 2:1 Rule (see drawing). If either the load or the drive force (F) is greater than twice the bearing length (1X), then a binding or interrupted motion may occur. If the location of the drive force or load cannot be changed, simply increase the distance between the bearings, or create a counterbalance to move the center-of-gravity back within the 2 to 1 ratio.

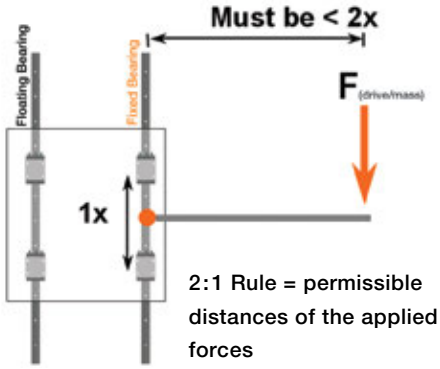

2:1 Rule = permissible distances of the applied forces

Fixed and Floating Bearing Mounting Instructions

When using systems with 2 parallel rails, one side must be designated as the “fixed” rail, and the opposite side as the “floating” rail.

Why use floating bearings?

- Promotes smooth gliding performance and maximizes bearing life
- Prevents binding caused by parallelism and angle errors
- Decreases necessary drive force and wear by minimizing friction-forces
- Enhances the precision of the system over the bearings’ lifetime.
- Reduce assembly time and co

Fixed Bearings

The “fixed” bearing rail should be positioned closest to the drive force. This rail will determine the precision of the system; no system should contain more than two “fixed” bearings.

Floating/Self-Aligning Bearings

The “floating” rail should be the rail located furthest from the drive force. It is to act only as a guide, and will compensate for any misalignments or angle errors in the system ensuring proper functionality.

Mounting Surfaces

The mounting surfaces for rails and bearings should have a very flat surface (e.g milled surface) in order to enhance performance. Variations in these surfaces may be compensated for by using floating bearings.

DryLin® R - Mounting Instructions

DryLin® R linear plain bearings in the 03 Design Series are self-aligning and offer great advantages in applications with parallel shafts. They are able to compensate for alignment and parallelism errors and should be used on the shaft located furthest from the drive mechanism.
The design provides a raised spherical area on the outer diameter of the aluminum adapter for self-alignment. Load capacity is the same as the fixed version.
Even in unfavorable edge-load conditions, the load is supported by the entire projected surface
In order to compensate for parallelism errors between two shafts, the outer diameter is designed to be smaller than the housing bore diameter by 0.2 - 0.3 mm (depending on the size). With the use of mounted O-rings, these bearings have an elastic bearing seat.

Compensation for angle errors

Series RJUI/RJUM/OJUI/OJUM-03 ±0.5°
Series RJUM-06-LL/OJUM-06-LL ±3.5°

Compensation of parallelism errors

Series RJUI/RJUM/OJUI/OJUM-03 ±0.1 mm (.004”)
Series RJUM-06-LL/OJUM-06-LL ±3 mm (.12”)

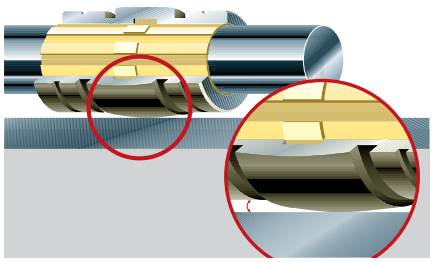

The spherical DryLin® adapters can compensate for alignment errors. A hard-anodization protects the aluminum adapter from wear.

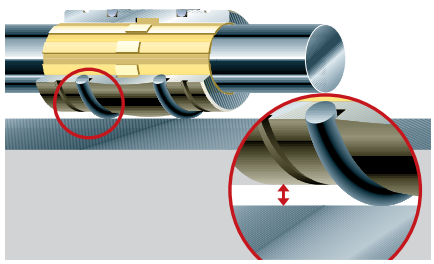

With built in clearances and the use of O-rings, the self-aligning DryLin® R bearings of the 03 Design Series can compensate for parallelism errors.

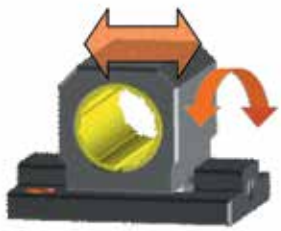

The self-aligning DryLin® R bearings of the 06 LL design series can compensate parallelism errors up to ± .12” (3mm).

Notes

DryLin® R - Installation instructions

DryLin® R shaft guides are designed for self-lubricating operation. They are dimensionally interchangeable with recirculating ball bearings, without the grease. During assembly, please note the following installation instructions:

Design tips for DryLin® linear plain bearings:
The values for "Fmax." relate to the performance of the iglide® liners , and is not intended as as selection tool for the calculation of an application. The maximum carrying capacity of the entire bearing system depends on the geometry, housing material, connection including the screws, and requires a separate inspection. For a detailed analysis, please use our online configurator at ➤ **www.igus.com/DryLin-expert**

Recommended shaft-tolerance: h6–h10
Roughness [Ra]: 0.15–0.6
Guide shafts, round/supported ➤ **shafts, page 1099**

Recommended mounting hole: H7
Linear Plain Bearing RJUM-01/03, TJUM-01/03, RJM, RJMP, RJ260(U)M02, Pressfit bearing WLM, WLFM

Liners:
JUI, JUIO, TUI, TUIO, J200UI, J200UIO, E7UI, E7UIO, JUM, JUMO, TUM, TUMO, E7UM (A180 available upon request)
● Interlocking clip-on in the housing bore Axial securing is given by a snap ring groove Torque protection through engagement of the safety pin in hole ø z

Linear plain bearings:
RJUM-01, RJUM-11, RJUM-ES, TJUM-01, RJUM-03, TJUM-03, RJUI-01, RJUI-03, TJUI-01, TJUI-03
● Secured by DIN 471 or 472 circlips, metric types (not included in delivery)

Solid plastic bearings:
RJM, RJI-01
● Fastening with circlips according to DIN 471 or 472 (not included in delivery) ● The E9 inner tolerance applies only after the pressfit

Solid plastic bearings:
RJMP
● Easy assembly by soft slip-fit
● Secured by DIN 471 or 472 circlips, metric types (not included in delivery)

Linear plain bearings:
RJUM-02
● Secured by pressfitting in steel housing bore H7 or aluminum housing bore K7
● Alternatively, the adapter can be glued with commercially available 2-component adhesive

Compact bearing:
RJ260 (UM-02)
● Axial saving and press fit into housing bore H7
● Alternatively, the adapter can be glued with commercially available 2-component adhesive into a housing

Linear plain bearings:
OJUM-01, OJUM-03, OJUI-01, OJUI-03
● Secure the bearing with set screws (not included in delivery)

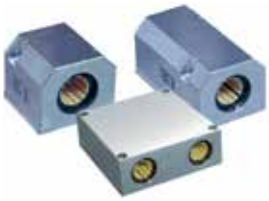

Quad block: RQA, RGA
twin design: RTA
● The bearing in the housing is secured using DIN 472 circlips

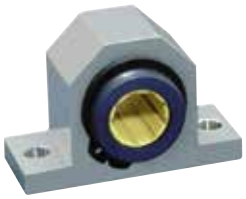

Linear housing:
RGAS
● The bearing in the housing is secured using DIN 471 circlips

Quad block: OQA, OGA, linear housing: OGAS, tandem design: OTA
● The bearings of the housings are secured using set screws

Pillow block: RJUM/E/T-05, RJUM-06/-LL, OJUM/E-06/-LL, flange housing: FJUM/T-01/02 quad block: RGA, OGA, twin design: RTA, OTA, linear housing: RGAS, OGAS
● Mounting screws of the housing DIN 912-8.8; circlips according to DIN 7980

DryLin® R Linear - Product range

Closed, long design

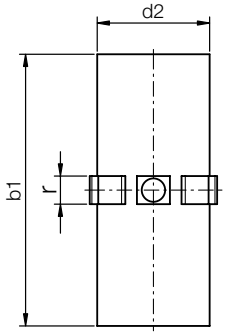

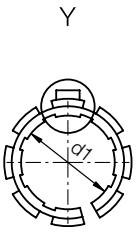

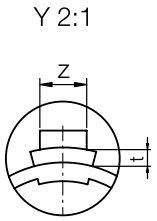

Other iglide® material options:
iglide® J200: Best for aluminum shafts
iglide® E7: Best for steel/stainless steel shafts
iglide® T500 (X)*: For high temps up to 356°F (180°C) in aluminum adapter

Order key

Type				Size
J	U	I	- 01	- 10
iglide® J	Liner	Inch	Standard	d1

Dimensions [inch]

Part No.	Nominal Size	Tolerance*	d2	b1	r -0.004 -0.008	t -0.004	z -0.020
JUI-01-06	3/8	.0016 - .0024	0.4684	0.846	.1250	.0311	.0866
JUI-01-08	1/2	.0016 - .0024	0.5934	1.220	.1250	.0391	.1024
JUI-01-10	5/8	.0016 - .0024	0.7184	1.460	.1406	.0391	.1181
JUI-01-12	3/4	.0016 - .0024	0.8747	1.575	.1875	.0391	.1339
JUI-01-16	1	.0016 - .0024	1.1247	2.205	.1875	.0391	.1496
JUI-01-20	1 1/4	.0020 - .0032	1.4058	2.573	.1875	.0391	.1496
JUI-01-24	1 1/2	.0020 - .0032	1.6558	2.953	.2500	.0625	.1811
JUI-01-32	2	.0024 - .0040	2.1871	3.937	.2813	.0625	.2280

Installation drawings housing bore for Liner JUI-01
Dimensions [inch]

Part No.	Nominal Size	di Max.	di Min.	B *h10	r +0.002	t +0.004	f +0.02	z +0.008
JUI-01-06	3/8	.4680	.4684	.875	.1250	.031	.039	.102
JUI-01-08	1/2	.5940	.5934	1.250	.1250	.0391	.059	.122
JUI-01-10	5/8	.7190	.7184	1.500	.1406	.0391	.067	.142
JUI-01-12	3/4	.8755	.8747	1.625	.1875	.0391	.079	.142
JUI-01-16	1	1.1255	1.1247	2.250	.1875	.0391	.079	.161
JUI-01-20	1 1/4	1.4068	1.4058	2.625	.1875	.0391	.079	.161
JUI-01-24	1 1/2	1.6568	1.6558	3.000	.2500	.051	.098	.200
JUI-01-32	2	2.1881	2.1871	4.000	.2813	.051	.098	.240

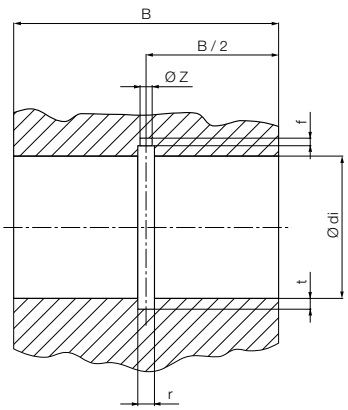

78) According to igus® testing method ➤ Page 1096
Please note: Installation instructions ➤ Page 1003

JUI can be combined with:

RJUI-01, RJUI-03,
TJUI-01, TJUI-03

Material: iglide® J
Temp. range: -40°F to +194°F
Best Shaft Material: DryLin® AWI hard anodized aluminum, case hardened steel, 300 series stainless, 400 series stainless, hard chrome plated steel
Maximum static psi = 5,075

DryLin® R Linear - Product range

Open, long design

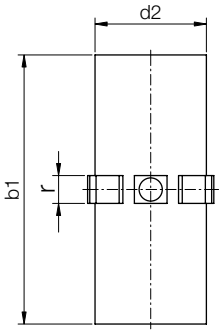

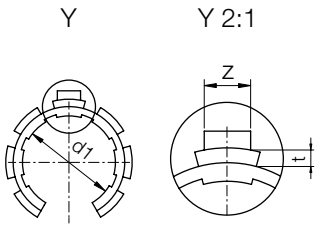

Other iglide® material options:
iglide® J200: Best for aluminum shafts
iglide® E7: Best for steel/stainless steel shafts
iglide® T500 (X)*: For high temps up to 356°F (180°C) in aluminum adapter

Order key

Type					Size
J	U	I	O	- 01	- 10
iglide® J	Liner	Inch	Open	Standard	d1

Dimensions [inch]

Part No.	Nominal Size	Tolerance	d2	b1	W	r -0.004 -0.008	t -0.004	z -0.020
JUIO-01-06	3/8	.0016-.0024	0.4684	0.846	0.250	.1250	.0311	.0866
JUIO-01-08	1/2	.0016-.0024	0.5934	1.220	0.394	.1250	.0391	.1024
JUIO-01-10	5/8	.0016-.0024	0.7184	1.460	0.433	.1406	.0391	.1181
JUIO-01-12	3/4	.0016-.0024	0.8747	1.575	0.492	.1875	.0391	.1339
JUIO-01-16	1	.0016-.0024	1.1247	2.205	0.630	.1875	.0391	.1496
JUIO-01-20	1 1/4	.0020-.0032	1.4058	2.573	0.709	.1875	.0391	.1496
JUIO-01-24	1 1/2	.0020-.0032	1.6558	2.953	0.866	.2500	.0625	.1811
JUIO-01-32	2	.0024-.0040	2.1871	4.937	1.181	.2813	.0625	.2280

Installation drawings housing bore for Liner JUIO-01
Dimensions [Inch]

Part No.	Shaft	di		B	r	t	f	z	W
Standard	Size Ø	Min.	Max.	*h10	+0.002	+0.004	+0.02	+0.008	+0.008
JUIO-01-06	3/8	.4680	.4684	.875	.1250	.031	.039	.102	0.250
JUIO-01-08	1/2	.5940	.5934	1.250	.1250	.031	.059	.122	0.394
JUIO-01-10	5/8	.7190	.7184	1.500	.1406	.039	.067	.142	0.433
JUIO-01-12	3/4	.8755	.8747	1.625	.1875	.039	.079	.142	0.492
JUIO-01-16	1	1.1255	1.1247	2.250	.1875	.039	.079	.161	0.630
JUIO-01-20	1 1/4	1.4068	1.4058	2.625	.1875	.039	.079	.161	0.709
JUIO-01-24	1 1/2	1.6568	1.6558	3.000	.2500	.062	.089	.200	0.866
JUIO-01-32	2	2.1881	2.1871	4.000	.2813	.062	.098	.240	1.181

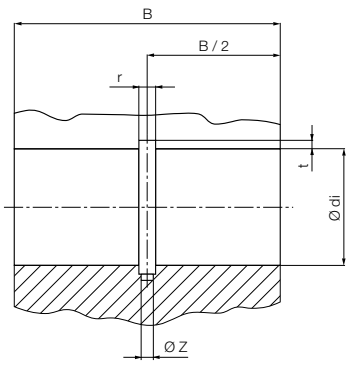

78) According to igus® testing method ➤ Page 1096
Please note: Installation instructions ➤ Page 1003

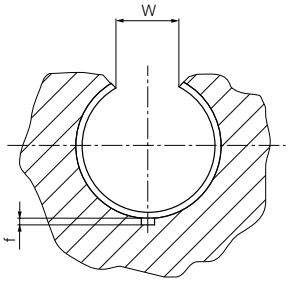

Can be combined with:

OJUI-01, OJUI-03

Material: iglide® J
Temp. range: -40°F to +194°F
Best Shaft Material: DryLin® AWI hard anodized aluminum, case hardened steel, 300 series stainless, 400 series stainless, hard chrome plated steel
Maximum static psi = 5,075

DryLin® R Linear - Product range

Closed, long design - Low clearance

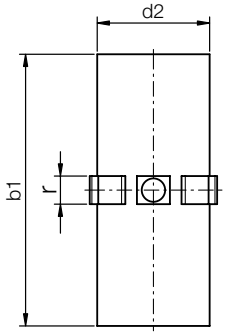

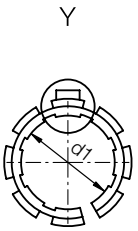

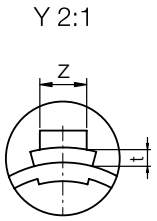

Other iglide® material options:
iglide® J200: Best for aluminum shafts

Order key

Type				Size
J	U	I	- 20 -	10
iglide® J	Liner	Inch	Low Clearance	d1

Dimensions [inch]

Part No.	Nominal Size	Tolerance*	d2	b1	r -0.004 -0.008	t -0.004	z -0.020
JUI-20-06	3/8	.0008-.0012	0.4684	0.846	.1250	.0311	.0866
JUI-20-08	1/2	.0008-.0012	0.5934	1.220	.1250	.0391	.1024
JUI-20-10	5/8	.0008-.0012	0.7184	1.460	.1406	.0391	.1181
JUI-20-12	3/4	.0008-.0012	0.8747	1.575	.1875	.0391	.1339
JUI-20-16	1	.0008-.0012	1.1247	2.205	.1875	.0391	.1496
JUI-20-20	1 1/4	.0010-.0016	1.4058	2.573	.1875	.0391	.1496
JUI-20-24	1 1/2	.0010-.0016	1.6558	2.953	.2500	.0625	.1811
JUI-20-32	2	.0012-.0020	2.1871	3.937	.2813	.0625	.2280

Installation drawings housing bore for Liner JUI-20
Dimensions [inch]

Part No.	Nominal Size	di Max.	di Min.	B *h10	r +0.002	t +0.004	f +0.02	z +0.008
JUI-20-06	3/8	.4680	.4684	.875	.1250	.031	.039	.102
JUI-20-08	1/2	.5940	.5934	1.250	.1250	.0391	.059	.122
JUI-20-10	5/8	.7190	.7184	1.500	.1406	.0391	.067	.142
JUI-20-12	3/4	.8755	.8747	1.625	.1875	.0391	.079	.142
JUI-20-16	1	1.1255	1.1247	2.250	.1875	.0391	.079	.161
JUI-20-20	1 1/4	1.4068	1.4058	2.625	.1875	.0391	.079	.161
JUI-20-24	1 1/2	1.6568	1.6558	3.000	.2500	.051	.098	.200
JUI-20-32	2	2.1881	2.1871	4.000	.2813	.051	.098	.240

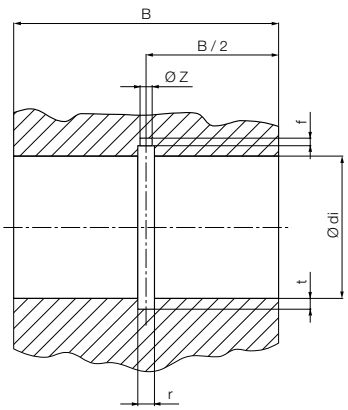

78) According to igus® testing method ➤ Page 1096
Please note: Installation instructions ➤ Page 1003

JUI can be combined with:

RJUI-01, RJUI-03,
TJUI-01, TJUI-03

Material: iglide® J
Temp. range: -40°F to +194°F
Best Shaft Material: DryLin® AWI hard anodized aluminum, case hardened steel, 300 series stainless, 400 series stainless, hard chrome plated steel
Maximum static psi = 5,075

DryLin® R Linear - Product range

Open, long design - Low clearance - for supported shafts

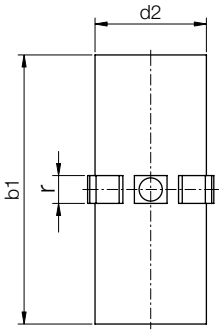

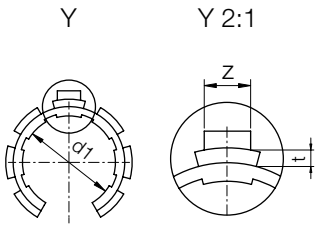

Other iglide® material options:
iglide® J200: Best for aluminum shafts

Order key

Type					Size
J	U	I	O	- 20 -	10
iglide® J	Liner	Inch	Open	Low clearance	d1

Dimensions [inch]

Part No.	Nominal Size	Tolerance	d2	b1	W	r -0.004 -0.008	t -0.004	z -0.020
JUIO-20-06	3/8	.0008-.0012	0.4684	0.846	0.250	.1250	.0311	.0866
JUIO-20-08	1/2	.0008-.0012	0.5934	1.220	0.394	.1250	.0391	.1024
JUIO-20-10	5/8	.0008-.0012	0.7184	1.460	0.433	.1406	.0391	.1181
JUIO-20-12	3/4	.0008-.0012	0.8747	1.575	0.492	.1875	.0391	.1339
JUIO-20-16	1	.0008-.0012	1.1247	2.205	0.630	.1875	.0391	.1496
JUIO-20-20	1 1/4	.0010-.0016	1.4058	2.573	0.709	.1875	.0391	.1496
JUIO-20-24	1 1/2	.0010-.0016	1.6558	2.953	0.866	.2500	.0625	.1811
JUIO-20-32	2	.0012-.0020	2.1871	4.937	1.181	.2813	.0625	.2280

Installation drawings housing bore for Liner JUIO-20
Dimensions [Inch]

Part No.	Shaft	di		B	r	t	f	z	W
Standard	Size Ø	Min.	Max.	*h10	+0.002	+0.004	+0.02	+0.008	+0.008
JUIO-20-06	3/8	.4680	.4684	.875	.1250	.031	.039	.102	0.250
JUIO-20-08	1/2	.5940	.5934	1.250	.1250	.031	.059	.122	0.394
JUIO-20-10	5/8	.7190	.7184	1.500	.1406	.039	.067	.142	0.433
JUIO-20-12	3/4	.8755	.8747	1.625	.1875	.039	.079	.142	0.492
JUIO-20-16	1	1.1255	1.1247	2.250	.1875	.039	.079	.161	0.630
JUIO-20-20	1 1/4	1.4068	1.4058	2.625	.1875	.039	.079	.161	0.709
JUIO-20-24	1 1/2	1.6568	1.6558	3.000	.2500	.062	.089	.200	0.866
JUIO-20-32	2	2.1881	2.1871	4.000	.2813	.062	.098	.240	1.181

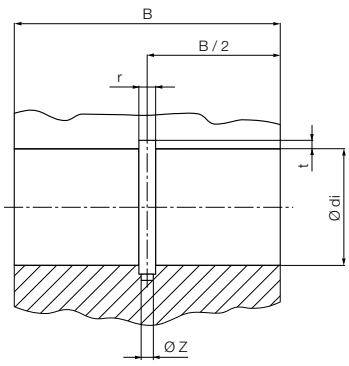

[78] According to igus® testing method ➤ Page 1096
Please note: Installation instructions ➤ Page 1003

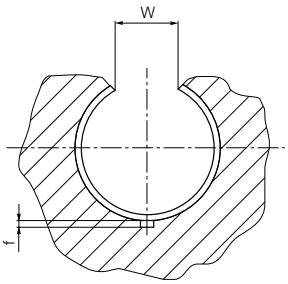

Can be combined with:

OJUI-01, OJUI-03

Material: iglide® J
Temp. range: -40°F to +194°F
Best Shaft Material: DryLin® AWI
hard anodized aluminum, case hardened steel, 300 series stainless, 400 series stainless
Maximum static psi = 5,075

DryLin® R Linear - Product range

J200 for aluminum shafts

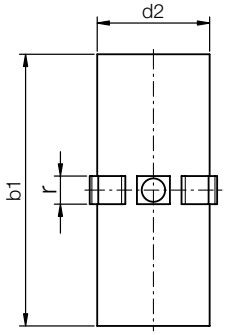

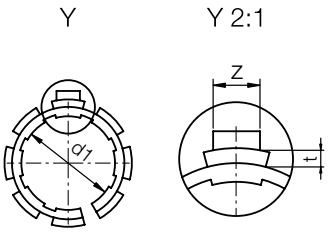

Other iglide® material options:
iglide® J: All around material
iglide® E7: Best for steel/stainless steel shafts
iglide® T500 (X)*: For high temps up to 356°F (180°C) in aluminum adapter

Order key

Type				Size
J200U	I	- 01	-	10
iglide® J200	Liner	Inch	Standard	d1

Dimensions [inch]

Part No.	Nominal Size	Tolerance*	d2	b1	r -0.004 -0.008	t -0.004	z -0.020
J200UI-01-06	3/8	.0016 - .0024	0.4684	0.846	.1250	.0311	.0866
J200UI-01-08	1/2	.0016 - .0024	0.5934	1.220	.1250	.0391	.1024
J200UI-01-10	5/8	.0016 - .0024	0.7184	1.460	.1406	.0391	.1181
J200UI-01-12	3/4	.0016 - .0024	0.8747	1.575	.1875	.0391	.1339
J200UI-01-16	1	.0016 - .0024	1.1247	2.205	.1875	.0391	.1496
J200UI-01-20	1 1/4	.0020 - .0032	1.4058	2.573	.1875	.0391	.1496
J200UI-01-24	1 1/2	.0020 - .0032	1.6558	2.953	.2500	.0625	.1811
J200UI-01-32	2	.0024 - .0040	2.1871	3.937	.2813	.0625	.2280

Installation drawings housing bore for Liner JUI-01
Dimensions [inch]

Part No.	Nominal Size	di Max.	di Min.	B *h10	r +0.002	t +0.004	f +0.02	z +0.008
J200UI-01-06	3/8	.4680	.4684	.875	.1250	.031	.039	.102
J200UI-01-08	1/2	.5940	.5934	1.250	.1250	.0391	.059	.122
J200UI-01-10	5/8	.7190	.7184	1.500	.1406	.0391	.067	.142
J200UI-01-12	3/4	.8755	.8747	1.625	.1875	.0391	.079	.142
J200UI-01-16	1	1.1255	1.1247	2.250	.1875	.0391	.079	.161
J200UI-01-20	1 1/4	1.4068	1.4058	2.625	.1875	.0391	.079	.161
J200UI-01-24	1 1/2	1.6568	1.6558	3.000	.2500	.051	.098	.200
J200UI-01-32	2	2.1881	2.1871	4.000	.2813	.051	.098	.240

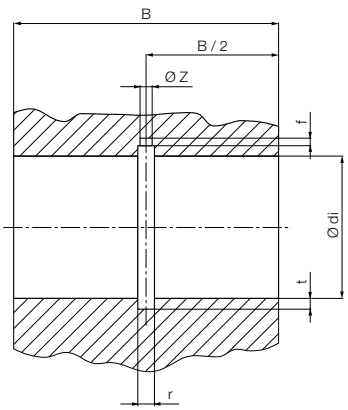

78) According to igus® testing method ➤ Page 1096
Please note: Installation instructions ➤ Page 1003

JUI can be combined with:

RJUI-01, RJUI-03,
TJUI-01, TJUI-03

Material: iglide® J200
Temp. range: -40°F to +194°F
Best Shaft Material: DryLin® AWI hard anodized aluminum
Maximum static psi = 5,075

DryLin® R Linear - Product range

J200 for aluminum shafts

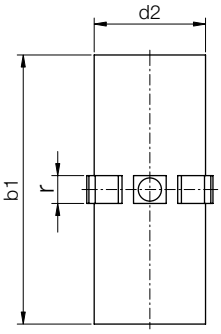

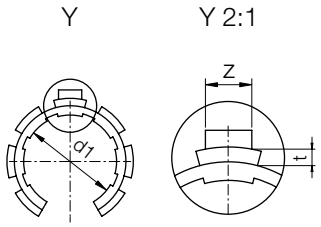

Other iglide® material options:
iglide® J: All around material
iglide® E7: Best for steel/stainless steel shafts
iglide® T500 (X)*: For high temps up to 356°F (180°C) in aluminum adapter

Order key

Type					Size
J200	U	I	O	- 01	- 10
iglide® J200	Liner	Inch	Open	Standard	d1

Dimensions [inch]

Part No.	Nominal Size	Tolerance	d2	b1	W	r -0.004 -0.008	t -0.004	z -0.020
J200UIO-01-06	3/8	.0016-.0024	0.4684	0.846	0.250	.1250	.0311	.0866
J200UIO-01-08	1/2	.0016-.0024	0.5934	1.220	0.394	.1250	.0391	.1024
J200UIO-01-10	5/8	.0016-.0024	0.7184	1.460	0.433	.1406	.0391	.1181
J200UIO-01-12	3/4	.0016-.0024	0.8747	1.575	0.492	.1875	.0391	.1339
J200UIO-01-16	1	.0016-.0024	1.1247	2.205	0.630	.1875	.0391	.1496
J200UIO-01-20	1 1/4	.0020-.0032	1.4058	2.573	0.709	.1875	.0391	.1496
J200UIO-01-24	1 1/2	.0020-.0032	1.6558	2.953	0.866	.2500	.0625	.1811
J200UIO-01-32	2	.0024-.0040	2.1871	4.937	1.181	.2813	.0625	.2280

Installation drawings housing bore for Liner JUIO-01
Dimensions [Inch]

Part No.	Shaft	di		B	r	t	f	z	W
Standard	Size Ø	Min.	Max.	*h10	+0.002	+0.004	+0.02	+0.008	+0.008
J200UIO-01-06	3/8	.4680	.4684	.875	.1250	.031	.039	.102	0.250
J200UIO-01-08	1/2	.5940	.5934	1.250	.1250	.031	.059	.122	0.394
J200UIO-01-10	5/8	.7190	.7184	1.500	.1406	.039	.067	.142	0.433
J200UIO-01-12	3/4	.8755	.8747	1.625	.1875	.039	.079	.142	0.492
J200UIO-01-16	1	1.1255	1.1247	2.250	.1875	.039	.079	.161	0.630
J200UIO-01-20	1 1/4	1.4068	1.4058	2.625	.1875	.039	.079	.161	0.709
J200UIO-01-24	1 1/2	1.6568	1.6558	3.000	.2500	.062	.089	.200	0.866
J200UIO-01-32	2	2.1881	2.1871	4.000	.2813	.062	.098	.240	1.181

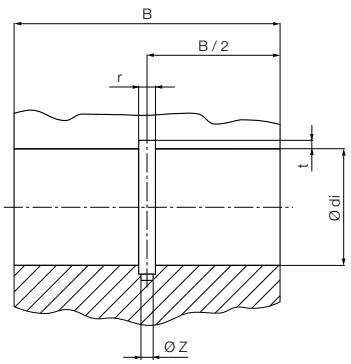

78) According to igus® testing method ➤ Page 1096
Please note: Installation instructions ➤ Page 1003

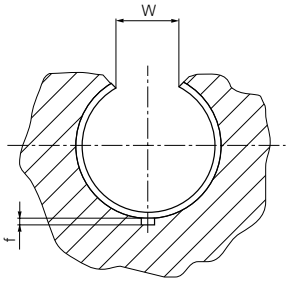

Can be combined with:

OJUI-01, OJUI-03

Material: iglide® J200
Temp. range: -40°F to +194°F
Best Shaft Material: DryLin® AWI hard anodized aluminum
Maximum static psi = 5,075

DryLin® R Linear - Product range

E7 for steel, stainless steel shafts

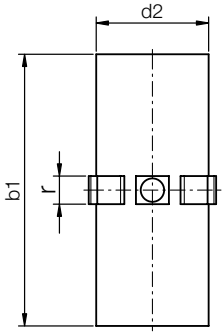

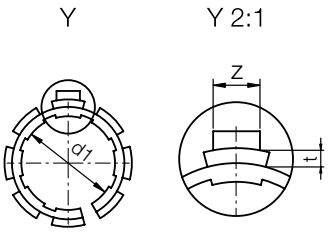

Other iglide® material options:
iglide® J: All around material
iglide® J200: Best for aluminum shafts
iglide® T500 (X)*: For high temps up to 356°F (180°C) in aluminum adapter

Order key

Type				Size
E7U	I	- 01	- 10	
iglide® E7	Liner	Inch	Standard	d1

Dimensions [inch]

Part No.	Nominal Size	Tolerance*	d2	b1	r -0.004 -0.008	t -0.004	z -0.020
E7UI-01-06	3/8	.0016 - .0024	0.4684	0.846	.1250	.0311	.0866
E7UI-01-08	1/2	.0016 - .0024	0.5934	1.220	.1250	.0391	.1024
E7UI-01-10	5/8	.0016 - .0024	0.7184	1.460	.1406	.0391	.1181
E7UI-01-12	3/4	.0016 - .0024	0.8747	1.575	.1875	.0391	.1339
E7UI-01-16	1	.0016 - .0024	1.1247	2.205	.1875	.0391	.1496
E7UI-01-20	1 1/4	.0020 - .0032	1.4058	2.573	.1875	.0391	.1496
E7UI-01-24	1 1/2	.0020 - .0032	1.6558	2.953	.2500	.0625	.1811
E7UI-01-32	2	.0024 - .0040	2.1871	3.937	.2813	.0625	.2280

Installation drawings housing bore for Liner JUI-01
Dimensions [inch]

Part No.	Nominal Size	di Max.	di Min.	B *h10	r +0.002	t +0.004	f +0.02	z +0.008
E7UI-01-06	3/8	.4680	.4684	.875	.1250	.031	.039	.102
E7UI-01-08	1/2	.5940	.5934	1.250	.1250	.0391	.059	.122
E7UI-01-10	5/8	.7190	.7184	1.500	.1406	.0391	.067	.142
E7UI-01-12	3/4	.8755	.8747	1.625	.1875	.0391	.079	.142
E7UI-01-16	1	1.1255	1.1247	2.250	.1875	.0391	.079	.161
E7UI-01-20	1 1/4	1.4068	1.4058	2.625	.1875	.0391	.079	.161
E7UI-01-24	1 1/2	1.6568	1.6558	3.000	.2500	.051	.098	.200
E7UI-01-32	2	2.1881	2.1871	4.000	.2813	.051	.098	.240

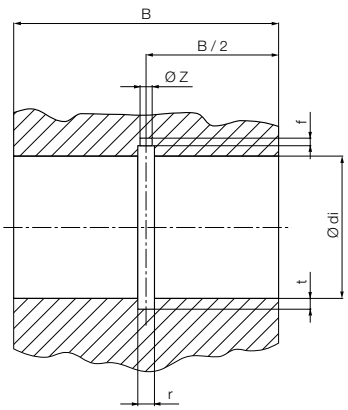

78) According to igus® testing method ➤ Page 1096
Please note: Installation instructions ➤ Page 1003

JUI can be combined with:

RJUI-01, RJUI-03,
TJUI-01, TJUI-03

Material: iglide® J200
Temp. range: -40°F to +194°F
Best Shaft Material: case hardened steel, 300 series stainless steel, hard chrome plated steel
Maximum static psi = 5,075

DryLin® R Linear - Product range

E7 for steel, stainless steel shafts

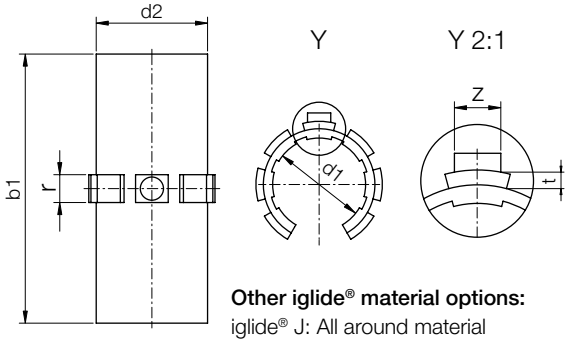

Other iglide® material options:
iglide® J: All around material
iglide® J200: Best for aluminum shafts
iglide® T500 (X)*: For high temps up to 356°F (180°C) in aluminum adapter

Order key

Type					Size
E7U	I	O	- 01	-	10
iglide® E7	Liner	Inch	Open	Standard	d1

Dimensions [inch]

Part No.	Nominal Size	Tolerance	d2	b1	W	r -0.004 -0.008	t -0.004	z -0.020
E7UIO-01-06	3/8	.0016-.0024	0.4684	0.846	0.250	.1250	.0311	.0866
E7UIO-01-08	1/2	.0016-.0024	0.5934	1.220	0.394	.1250	.0391	.1024
E7UIO-01-10	5/8	.0016-.0024	0.7184	1.460	0.433	.1406	.0391	.1181
E7UIO-01-12	3/4	.0016-.0024	0.8747	1.575	0.492	.1875	.0391	.1339
E7UIO-01-16	1	.0016-.0024	1.1247	2.205	0.630	.1875	.0391	.1496
E7UIO-01-20	1 1/4	.0020-.0032	1.4058	2.573	0.709	.1875	.0391	.1496
E7UIO-01-24	1 1/2	.0020-.0032	1.6558	2.953	0.866	.2500	.0625	.1811
E7UIO-01-32	2	.0024-.0040	2.1871	4.937	1.181	.2813	.0625	.2280

Installation drawings housing bore for Liner JUIO-01
Dimensions [Inch]

Part No.	Shaft	di		B	r	t	f	z	W
Standard	Size Ø	Min.	Max.	*h10	+0.002	+0.004	+0.02	+0.008	+0.008
E7UIO-01-06	3/8	.4680	.4684	.875	.1250	.031	.039	.102	0.250
E7UIO-01-08	1/2	.5940	.5934	1.250	.1250	.031	.059	.122	0.394
E7UIO-01-10	5/8	.7190	.7184	1.500	.1406	.039	.067	.142	0.433
E7UIO-01-12	3/4	.8755	.8747	1.625	.1875	.039	.079	.142	0.492
E7UIO-01-16	1	1.1255	1.1247	2.250	.1875	.039	.079	.161	0.630
E7UIO-01-20	1 1/4	1.4068	1.4058	2.625	.1875	.039	.079	.161	0.709
E7UIO-01-24	1 1/2	1.6568	1.6558	3.000	.2500	.062	.089	.200	0.866
E7UIO-01-32	2	2.1881	2.1871	4.000	.2813	.062	.098	.240	1.181

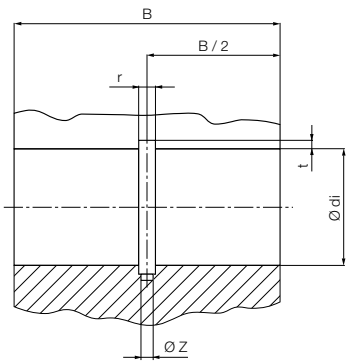

[78] According to igus® testing method ➤ Page 1096
Please note: Installation instructions ➤ Page 1003

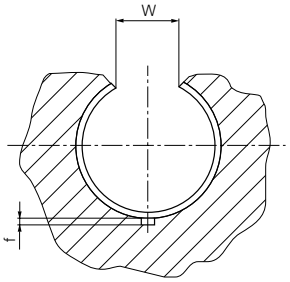

Can be combined with:

OJUI-01, OJUI-03

Material: iglide® J200
Temp. range: -40°F to +194°F
Best Shaft Material: case hardened steel, 300 series stainless, 400 series stainless steel, hard chrome plated steel
Maximum static psi = 5,075

DryLin® R Linear - Product range

Closed, long design - High temperature T500 (X)* material

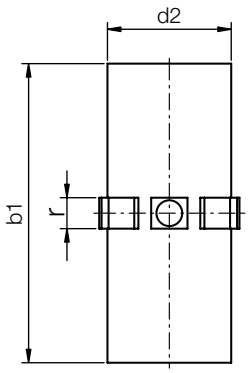

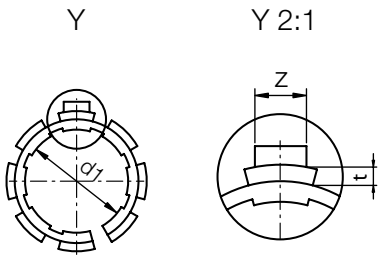

Other iglide® material options:
iglide® J: All around material
iglide® J200: Best for aluminum shafts
iglide® E7: Best for steel/stainless steel shafts

Order key

Type				Size
T	U	I	- 01	- 10
iglide® T500 (X)*	Liner	Inch	Standard	d1

Dimensions [inch]

Part No.	Nominal Size	Tolerance*	d2	b1	r -0.004 -0.008	t -0.004	z -0.020
TUI-01-08	1/2	.0016 - .0024	0.5934	1.220	.1250	.0391	.1024
TUI-01-12	3/4	.0016 - .0024	0.8747	1.545	.1875	.0391	.1339
TUI-01-16	1	.0016 - .0024	1.1247	2.205	.1875	.0391	.1496
TUI-01-20	1 1/4	.0020 - .0032	1.4058	2.573	.1875	.0391	.1496
TUI-01-24	1 1/2	.0020 - .0032	1.6558	2.953	.2500	.0625	.1811

Installation drawings housing bore for Liner TUI-01
Dimensions [inch]

Part No.	Nominal Size	di Max.	di Min.	B *h10	r +0.002	t +0.004	f +0.02	z +0.008
TUI-01-08	1/2	.5940	.5934	1.250	.1250	.0391	.059	.122
TUI-01-12	3/4	.8755	.8747	1.625	.1875	.0391	.079	.142
TUI-01-16	1	1.1255	1.1247	2.250	.1875	.0391	.079	.161
TUI-01-20	1 1/4	1.4068	1.4058	2.625	.1875	.0391	.079	.161
TUI-01-24	1 1/2	1.6568	1.6558	3.000	.2500	.051	.098	.200

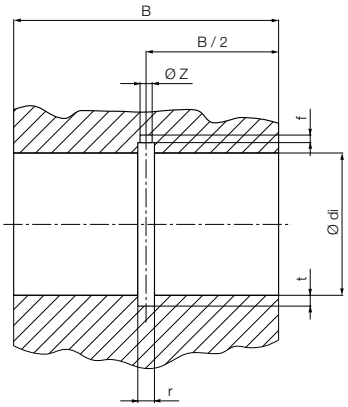

*European part numbers for the high temperature liner begin with X. Example XUI-...

78) According to igus® testing method ➤ Page 1096
Please note: Installation instructions ➤ Page 1003

Can be combined with:

RJUI-01, RJUI-03,
TJUI-01, TJUI-03

Material: iglide® T500 (X)*
Temp. range: -148°F to +482°F in steel housing, up to 356°F in aluminum adapter
Best Shaft Material: Hardened stainless and hard chrome plated steel. Maximum static psi = 21,755

DryLin® R Linear - Product range

Open, long design, high temperature T500 (X)*– for supported shafts

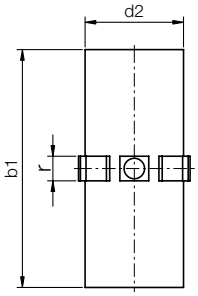

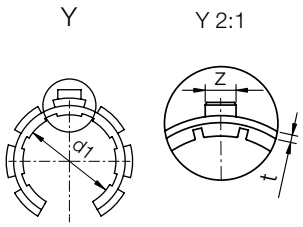

● 2-pieces per part number

Other iglide® material options:
iglide® J: All around material
iglide® J200: Best for aluminum shafts
iglide® E7: Best for steel/stainless steel shafts

Order key

Type					Size
T	U	I	O	- 01	- 10
iglide® T500 (X)*	Liner	Inch	Open	Standard	Diameter

Dimensions [inch]

Part No.	Nominal Size	Tolerance	d2	b1	W	r -0.004 -0.008	t -0.004	z -0.020
TUIO-01-06	3/8	.0016-.0024	0.4684	0.846	0.250	.1250	.0311	.0866
TUIO-01-08	1/2	.0016-.0024	0.5934	1.220	0.394	.1250	.0391	.1024
TUIO-01-10	5/8	.0016-.0024	0.7184	1.460	0.433	.1406	.0391	.1181
TUIO-01-12	3/4	.0016-.0024	0.8747	1.575	0.492	.1875	.0391	.1339
TUIO-01-16	1	.0016-.0024	1.1247	2.205	0.630	.1875	.0391	.1496
TUIO-01-20	1 1/4	.0020-.0032	1.4058	2.573	0.709	.1875	.0391	.1496
TUIO-01-24	1 1/2	.0020-.0032	1.6558	2.953	0.866	.2500	.0625	.1811
TUIO-01-32	2	.0024-.0040	2.1871	4.937	1.181	.2813	.0625	.2280

Installation drawings housing bore for TUIO-01 | dimensions [inch]

Part No.	Shaft	di		B	r	t	f	z	W
Standard	Size Ø	Min.	Max.	*h10	+0.002	+0.004	+0.02	+0.008	+0.008
TUIO-01-06	3/8	.4680	.4684	.875	.1250	.031	.039	.102	0.250
TUIO-01-08	1/2	.5940	.5934	1.250	.1250	.031	.059	.122	0.394
TUIO-01-10	5/8	.7190	.7184	1.500	.1406	.039	.067	.142	0.433
TUIO-01-12	3/4	.8755	.8747	1.625	.1875	.039	.079	.142	0.492
TUIO-01-16	1	1.1255	1.1247	2.250	.1875	.039	.079	.161	0.630
TUIO-01-20	1 1/4	1.4068	1.4058	2.625	.1875	.039	.079	.161	0.709
TUIO-01-24	1 1/2	1.6568	1.6558	3.000	.2500	.062	.089	.200	0.866
TUIO-01-32	2	2.1881	2.1871	4.000	.2813	.062	.098	.240	1.181

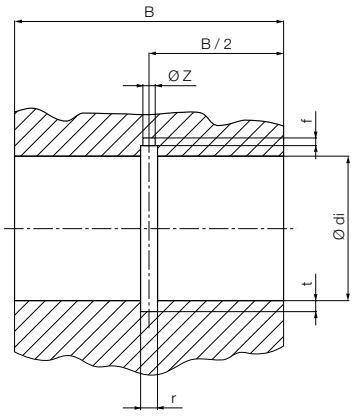

*European part numbers for the high temperature liner begin with X. Example XUIO-...

78) According to igus® testing method ➤ Page 1096
Please note: Installation instructions ➤ Page 1003

Can be combined with:

OJUI-01/-03
TJUI-01/-03

OJUI-06/-06-LL

Material: iglide® T500 (X)*
Temp. range: -148°F to +482°F in steel housing, up to 356°F in aluminum adapter
Best Shaft Material: Hardened stainless and hard chrome plated steel. Maximum static psi = 21,755

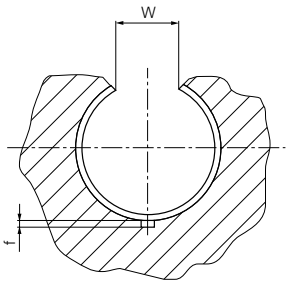

DryLin® R Linear - Product range

Standard type made of iglide® J

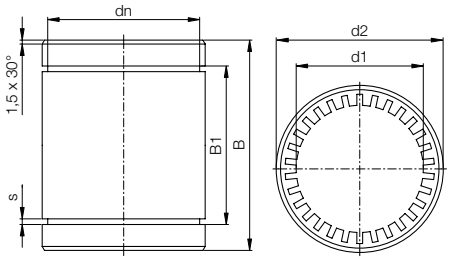

- Dimension equivalent to the standard for recirculating ball bearings
- Assembly by pressfitting
  ➤ Press-in forces: see table
- NOTE: Parts are oversized prior to pressfit

Order key

Type				Size
R	J	I	-01	-10
Closed	iglide® J	Inch	Standard	Diameter

iglide® material options:
iglide® J: All around material

Technical Data

Part No.	Shaft Ø	d1-Tolerance[78] after pressfit in housing	Fmax. dyn.[82] P = 2.5 MPa [N]	Fmax. stat[82] P = 17.5 MPa [N]	Housing bore Recommendations Min	Housing bore Recommendations Max	Weight [g]	Pressfit force[83] [N]
RJI-01-06	3/8	+0.0010 +0.0024	265	1.855	0.6250	0.6257	3	400
RJI-01-08	1/2	+0.0013 +0.0030	505	3.535	0.8750	0.8758	8.8	700
RJI-01-10	5/8	+0.0013 +0.0030	755	5.285	1.1250	1.1258	17.4	1,300
RJI-01-12	3/4	+0.0016 +0.0036	982	6.877	1.2500	1.2510	22.2	1,100
RJI-01-16	1	+0.0016 +0.0036	1.815	12.705	1.5620	1.5630	42.5	1,500
RJI-01-20	1 1/4	+0.0020 +0.0044	2.645	18.515	2.0000	2.0010	81.1	3,500
RJI-01-24	1 1/2	+0.0020 +0.0044	3.630	25.410	2.3750	2.3760	127.1	4,500
RJI-01-32	2	+0.0024 +0.0053	6.452	45.167	3.0000	3.0010	249	4,200

Dimensions [inch]

Part No.	d1	d2	B	B1	s	dn
RJI-01-06	3/8	0.625	0.875	0.689	0.0410	0.587
RJI-01-08	1/2	0.875	1.25	1.0125	0.0480	0.82
RJI-01-10	5/8	1.125	1.50	1.0950	0.0580	1.0600
RJI-01-12	3/4	1.25	1.625	1.25	0.0580	1.177
RJI-01-16	1	1.5625	2.25	1.864	0.0700	1.471
RJI-01-20	1 1/4	2.00	2.625	1.984	0.0700	1.889
RJI-01-24	1 1/2	2.375	3.00	2.39	0.0890	2.241
RJI-01-32	2	3.00	4.00	3.163	0.1050	2.839

[78] According to igus® testing method ➤ Page 1096
[82] Design standards ➤ Page 1001
[83] Applies to room temperature pressfit decreases with time depending on the temperature
Please note: Installation instructions ➤ Page 1003

DryLin® R Linear - Product range

Standard type made of iglide® J - Low clearance/precision

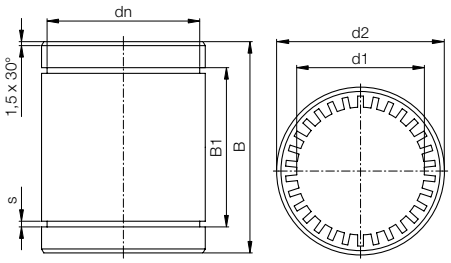

- Easy assembly by slip-fit
- Reduced bearing clearance
- Temperature range -4°F to +140°F (-20 °C to +60 °C)

Order key

Type					Size
R	J	I	P	-	01-10
Closed	iglide® J	Inch	Low clearance	Standard	Diameter

iglide® material options:
iglide® J: All around material

Technical Data

Part No.	Shaft Ø	d1-Tolerance[78]	Fmax. dyn.[82] P = 2.5 MPa [N]	Fmax. stat.[82] P = 2.5 MPa [N]	Housing bore Recommendations Min	Housing bore Recommendations Max	Weight [g]
RJIP-01-04	1/4	+ 0.00 +0.0014	180	1.267	0.5000	0.5007	2
RJIP-01-06	3/8	+ 0.00 +0.0014	265	1.855	0.6250	0.6257	2
RJIP-01-08	1/2	+ 0.00 +0.0017	505	3.535	0.8750	0.8758	4
RJIP-01-10	5/8	+ 0.00 +0.0017	755	5.285	1.1250	1.1258	7
RJIP-01-12	3/4	+ 0.00 +0.0020	982	6.877	1.2500	1.2510	9
RJIP-01-16	1	+ 0.00 +0.0020	1.815	12.705	1.5620	1.5630	13
RJIP-01-20	1 1/4	+ 0.00 +0.0024	2.645	18.515	2.0000	2.0010	24

Dimensions [inch]

Part No.	d1	d2	B	B1	s	dn
RJIP-01-04	1/4	0.4999	0.74803	0.5188	0.0409	0.4669
RJIP-01-06	3/8	0.625	0.875	0.689	0.0410	0.587
RJIP-01-08	1/2	0.875	1.25	1.0125	0.0480	0.82
RJIP-01-10	5/8	1.125	1.50	1.0950	0.0580	1.0600
RJIP-01-12	3/4	1.25	1.625	1.25	0.0580	1.177
RJIP-01-16	1	1.5625	2.25	1.864	0.0700	1.471
RJIP-01-20	1 1/4	2.00	2.625	1.984	0.0700	1.889

[78] According to igus® testing method ➤ Page 1096
[82] Design standards ➤ Page 1001
Please note: Installation instructions ➤ Page 1003

DryLin® R Linear - Product range

Closed, anodized aluminum adapter

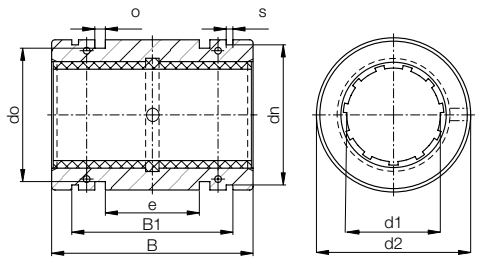

- Anodized aluminum adapter
- Dimensionally interchangeable with linear ball bearings
- Liner made of iglide® J: Temperature range -40°F to +194°F (-40°C to +90°C) JUI-01 (standard)
- T500 liner optional for chemicals/high temps up to 482°F (250°C) for steel housing, 356°F (180°C) for aluminum
- Suitable shafting for iglide® J: DryLin® AWI aluminum, case-hardened, 300 series stainless Best shafting for T500: hard-chrome and hard-stainless steel

Order key

Type					Size
R	J	U	I	- 01-10	
Closed	iglide® Material	Liner	Inch	Standard	Diameter

iglide® material options:
iglide® J: All around material
iglide® J200: Best for aluminum shafts
iglide® E7: Best for steel/stainless steel shafts
iglide® T500 (X)*: For high temps up to 356°F (180°C) in aluminum adapter

Dimensions (inch)

Part No.	Nominal Size	Tolerance[78]	d2 ISO h7	B ISO h10	B1 ISO H10	s	dn	e	o +.004	do
RJZI-01-04*	1/4	.0016 -.0032	.5000	.7500	.518	.0410	.4670	.125	.0800	.3990
RJUI-01-06	3/8	.0016 -.0032	.6250	.8700	.644	.0410	.5870	.243	.0610	.5660
RJUI-01-08	1/2	.0016 -.0032	.8750	1.2500	.979	.0520	.8200	.281	.1250	.7120
RJUI-01-10	5/8	.0016 -.0032	1.1250	1.5000	1.124	.0620	1.0600	.312	.1250	.9620
RJUI-01-12	3/4	.0016 -.0032	1.2500	1.6200	1.186	.0620	1.1770	.312	.1250	1.0870
RJUI-01-16	1	.0016 -.0032	1.5625	2.2500	1.773	.0740	1.4710	.500	.1250	1.3990
RJUI-01-20	1-1/4	.0020 -.0041	2.0000	2.6200	2.023	.0740	1.8890	.625	.1250	1.8370
RJUI-01-24	1-1/2	.0020 -.0041	2.3750	3.0000	2.440	.0950	2.2410	.750	.1620	2.1520
RJUI-01-32	2	.0024 -.0051	3.0000	4.0000	3.222	.1110	2.8390	1.000	.1890	2.7750

Housing Bore Recommendations

Nominal ID Size	Min.	Max.
1/4	0.5000	0.5007
3/8	0.6250	0.6257
1/2	0.8750	0.8758
5/8	1.1250	1.1258
3/4	1.2500	1.2510
1	1.5625	1.5635
1-1/4	2.0000	2.0010
1-1/2	2.3750	2.3760
2	3.0000	3.0010

Load Data

Part No.	F max, dynamic p = 725 psi (lbs)	F max, static p = 5075 psi (lbs)
RJZI-01-04*	135	946
RJUI-01-06	118	828
RJUI-01-08	225	1575
RJUI-01-10	338	2365
RJUI-01-12	439	3077
RJUI-01-16	811	5678
RJUI-01-20	1184	8287
RJUI-01-24	1622	11358
RJUI-01-32	2885	20198

Also available with liners:

J200UI-01

E7UI-01

TUI-01

[78] According to igus® testing method ➤ Page 1096
[82] Design standards ➤ Page 1001
Please note: Installation instructions ➤ Page 1003

DryLin® R Linear - Product range

Closed, anodized aluminum adapter - Low clearance

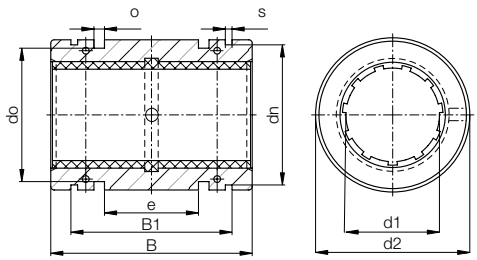

- Anodized aluminum adapter
- Dimensionally interchangeable with linear ball bearings
- Liner made of iglide® J: Temperature range -40°F to +194°F (-40°C to +90°C) JUI-20 (low clearance)
- T500 liner optional for chemicals/high temps (up to 482°F for steel housing, 356°F for aluminum)
- Suitable shafting for iglide® J: DryLin® AWI aluminum, case-hardened, 300 series stainless Best shafting for T500: hard-chrome and hard-stainless steel

Order key

Type						Size
R	J	U	I	-	21	-10
Closed	iglide® Material	Liner	Inch		Low clearance	Diameter

iglide® material options:
iglide® J: All around material
iglide® J200: Best for aluminum shafts
iglide® E7: Best for steel/stainless steel shafts
iglide® T500 (X)*: For high temps up to 356°F (180°C) in aluminum adapter

Dimensions (inch)

Part No.	Nominal Size	Tolerance[78]	d2 ISO h7	B ISO h10	B1 ISO H10	s	dn	e	o +.004	do
RJUI-21-06	3/8	.0008 - .0016	.6250	.8700	.644	.0410	.5870	.243	.0610	.5660
RJUI-21-08	1/2	.0008 - .0016	.8750	1.2500	.979	.0520	.8200	.281	.1250	.7120
RJUI-21-10	5/8	.0008 - .0016	1.1250	1.5000	1.124	.0620	1.0600	.312	.1250	.9620
RJUI-21-12	3/4	.0008 - .0016	1.2500	1.6200	1.186	.0620	1.1770	.312	.1250	1.0870
RJUI-21-16	1	.0008 - .0016	1.5625	2.2500	1.773	.0740	1.4710	.500	.1250	1.3990
RJUI-21-20	1-1/4	.0010 - .0021	2.0000	2.6200	2.023	.0740	1.8890	.625	.1250	1.8370
RJUI-21-24	1-1/2	.0010 - .0021	2.3750	3.0000	2.440	.0950	2.2410	.750	.1620	2.1520
RJUI-21-32	2	.0012 - .0026	3.0000	4.0000	3.222	.1110	2.8390	1.000	.1890	2.7750

Housing Bore Recommendations

Nominal ID Size	Min.	Max.
3/8	0.6250	0.6257
1/2	0.8750	0.8758
5/8	1.1250	1.1258
3/4	1.2500	1.2510
1	1.5625	1.5635
1-1/4	2.0000	2.0010
1-1/2	2.3750	2.3760
2	3.0000	3.0010

Load Data

Part No.	F max, dynamic p = 725 psi (lbs)	F max, static p = 5075 psi (lbs)
RJUI-21-06	118	828
RJUI-21-08	225	1575
RJUI-21-10	338	2365
RJUI-21-12	439	3077
RJUI-21-16	811	5678
RJUI-21-20	1184	8287
RJUI-21-24	1622	11358
RJUI-21-32	2885	20198

Also available with liners:

J200UI-01

E7UI-01

TUI-01

[78] According to igus® testing method ➤ Page 1096
[82] Design standards ➤ Page 1001
Please note: Installation instructions ➤ Page 1003

DryLin® R Linear - Product range

Closed, anodized aluminum adapter - Self-aligning - iglide® J liner

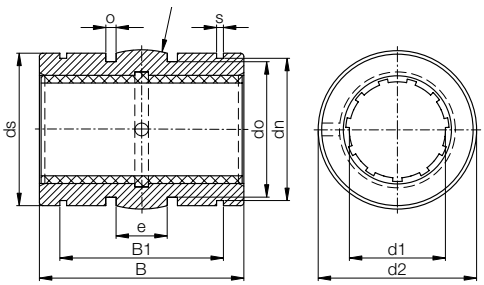

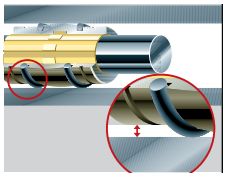

- Anodized aluminum adapter
- Dimensionally interchangeable with linear ball bearings
- Equipped with liner made of iglide® J
  Temperature range -40°F to +194°F (-40°C to +90°C)
  JUI-01 (standard)
- T500 liner optional for chemicals/high temps
  (up to 482°F for steel housing, 356°F for aluminum)
- Suitable shafting for iglide® J: DryLin® AWI aluminum, case-hardened, 300 series stainless Best shafting for T500: hard-chrome and hard-stainless steel

Order key

Type						Size
R	J	U	I	-	03-10	
Closed	iglide® Material	Liner	Inch		Self-aligning	Diameter

iglide® material options:
iglide® J: All around material
iglide® J200: Best for aluminum shafts
iglide® E7: Best for steel/stainless steel shafts
iglide® T500 (X)*: For high temps up to 356°F (180°C) in aluminum adapter

Dimensions (inch)

Part No.	Nominal Size	Tolerance**	d2 ISO h8	B ISO h10	B1 ISO H10	s	ds	dn ISO h10	do	o -0.004	e
RJZI-03-04*	1/4	.0016-.0032	.4921	.7460	.5270	.0410	.4803	.4660	.3990	.0800	.1250
RJUI-03-06	3/8	.0016-.0032	.6173	.8713	.6520	.0410	.6055	.5870	.5240	.0610	.2430
RJUI-03-08	1/2	.0016-.0032	.8673	1.2461	.9870	.0520	.8556	.8200	.7120	.1250	.2815
RJUI-03-10	5/8	.0016-.0032	1.1173	1.4961	1.1360	.0620	1.1055	1.0600	.9620	.1250	.3125
RJUI-03-12	3/4	.0016-.0032	1.2421	1.6173	1.1980	.0620	1.2300	1.1770	1.0870	.1250	.3125
RJUI-03-16	1	.0016-.0032	1.5547	2.2421	1.7890	.0740	1.5271	1.4710	1.3990	.1250	.5000
RJUI-03-20	1-1/4	.0020-.0041	1.9881	2.6173	2.0390	.0740	1.9606	1.8890	1.8370	.1250	.6250
RJUI-03-24	1-1/2	.0020-.0041	2.3634	2.9921	2.4630	.0950	2.3358	2.2410	2.1520	.1620	.7500
RJUI-03-32	2	.0024-.0051	2.9881	3.9921	3.2490	.1110	2.9606	2.8390	2.7750	.1890	1.0000

Housing Bore Recommendations

Nominal ID Size	Min.	Max.
1/4	0.5000	0.5007
3/8	0.6250	0.6257
1/2	0.8750	0.8758
5/8	1.1250	1.1258
3/4	1.2500	1.2510
1	1.5625	1.5635
1-1/4	2.0000	2.0010
1-1/2	2.3750	2.3760
2	3.0000	3.0010

Load Data

Part No.	F max, dynamic p = 725 psi (lbs)	F max, static p = 5075 psi (lbs)
RJZI-03-04*	135	946
RJUI-03-06	118	828
RJUI-03-08	225	1575
RJUI-03-10	338	2365
RJUI-03-12	439	3077
RJUI-03-16	811	5678
RJUI-03-20	1184	8287
RJUI-03-24	1622	11358
RJUI-03-32	2885	20198

Also available with liners:

J200UI-01

E7UI-01

TUI-01

[78] According to igus® testing method ➤ Page 1096
[82] Design standards ➤ Page 1001
Please note: Installation instructions ➤ Page 1003

DryLin® R Linear - Product range

Closed, anodized aluminum adapter - iglide® J200 liner For aluminum shafting

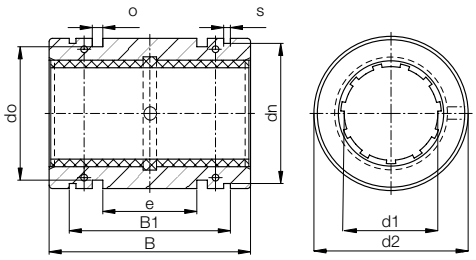

- Anodized aluminum adapter
- Dimensionally interchangeable with linear ball bearings
- Equipped with liner made of iglide® J200
  Temperature range -40°F to +194°F (-40°C to +90°C)
  J200UI-01 (standard)
- T500 liner optional for chemicals/high temps
  (up to 482°F for steel housing, 356°F for aluminum)
- Ideal for aluminum shafting

Order key

Type						Size
R	J200	U	I	- 01	-	10
Closed	iglide® Material	Liner	Inch	Standard		Diameter

iglide® material options:
iglide® J: All around material
iglide® J200: Best for aluminum shafts
iglide® E7: Best for steel/stainless steel shafts
iglide® T500 (X)*: For high temps up to 356°F (180°C) in aluminum adapter

Dimensions (inch)

Part No.	Nominal Size	Tolerance[78]	d2 ISO h7	B ISO h10	B1 ISO H10	s	dn	e	o +.004	do
RJ200UI-01-06	3/8	.0016 -.0032	.6250	.8700	.644	.0410	.5870	.243	.0610	.5660
RJ200UI-01-08	1/2	.0016 -.0032	.8750	1.2500	.979	.0520	.8200	.281	.1250	.7120
RJ200UI-01-10	5/8	.0016 -.0032	1.1250	1.5000	1.124	.0620	1.0600	.312	.1250	.9620
RJ200UI-01-12	3/4	.0016 -.0032	1.2500	1.6200	1.186	.0620	1.1770	.312	.1250	1.0870
RJ200UI-01-16	1	.0016 -.0032	1.5625	2.2500	1.773	.0740	1.4710	.500	.1250	1.3990
RJ200UI-01-20	1-1/4	.0020 -.0041	2.0000	2.6200	2.023	.0740	1.8890	.625	.1250	1.8370
RJ200UI-01-24	1-1/2	.0020 -.0041	2.3750	3.0000	2.440	.0950	2.2410	.750	.1620	2.1520
RJ200UI-01-32	2	.0024 -.0051	3.0000	4.0000	3.222	.1110	2.8390	1.000	.1890	2.7750

Housing Bore Recommendations

Nominal ID Size	Min.	Max.
3/8	0.6250	0.6257
1/2	0.8750	0.8758
5/8	1.1250	1.1258
3/4	1.2500	1.2510
1	1.5625	1.5635
1-1/4	2.0000	2.0010
1-1/2	2.3750	2.3760
2	3.0000	3.0010

Load Data

Part No.	F max, dynamic p = 725 psi (lbs)	F max, static p = 5075 psi (lbs)
RJ200UI-01-06	118	828
RJ200UI-01-08	225	1575
RJ200UI-01-10	338	2365
RJ200UI-01-12	439	3077
RJ200UI-01-16	811	5678
RJ200UI-01-20	1184	8287
RJ200UI-01-24	1622	11358
RJ200UI-01-32	2885	20198

Also available with liners:

JUI-01

E7UI-01

TUI-01

[78] According to igus® testing method ➤ Page 1096
[82] Design standards ➤ Page 1001
Please note: Installation instructions ➤ Page 1003

DryLin® R Linear - Product range

Closed, anodized aluminum adapter - Self-aligning - iglide® J200 liner For aluminum shafting

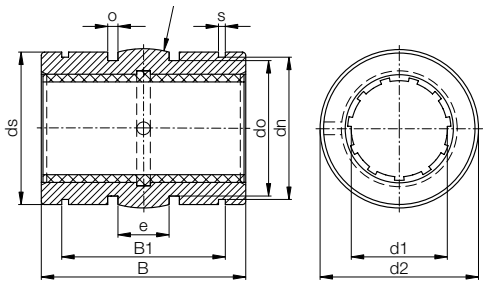

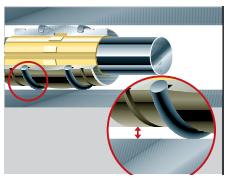

- Anodized aluminum adapter
- Dimensionally interchangeable with linear ball bearings
- Equipped with liner made of iglide® J200
  Temperature range -40°F to +194°F (-40°C to +90°C)
  J200UI-01 (standard)
- T500 liner optional for chemicals/high temps
  (up to 482°F for steel housing, 356°F for aluminum)
- Suitable shafting: DryLin® AWI aluminum

Order key

Type					Size
R	J200	U	I	- 03 -	10
Closed	iglide® Material	Liner	Inch	Self-aligning	Diameter

iglide® material options:
iglide® J: All around material
iglide® J200: Best for aluminum shafts
iglide® E7: Best for steel/stainless steel shafts
iglide® T500 (X)*: For high temps up to 356°F (180°C) in aluminum adapter

Dimensions (inch)

Part No.	Nominal Size	Tolerance**	d2 ISO h8	B ISO h10	B1 ISO H10	s	ds	dn ISO h10	do	o -0.004	e
RJ200UI-03-06	3/8	.0016 - .0032	.6173	.8713	.6520	.0410	.6055	.5870	.5240	.0610	.2430
RJ200UI-03-08	1/2	.0016 - .0032	.8673	1.2461	.9870	.0520	.8556	.8200	.7120	.1250	.2815
RJ200UI-03-10	5/8	.0016 - .0032	1.1173	1.4961	1.1360	.0620	1.1055	1.0600	.9620	.1250	.3125
RJ200UI-03-12	3/4	.0016 - .0032	1.2421	1.6173	1.1980	.0620	1.2300	1.1770	1.0870	.1250	.3125
RJ200UI-03-16	1	.0016 - .0032	1.5547	2.2421	1.7890	.0740	1.5271	1.4710	1.3990	.1250	.5000
RJ200UI-03-20	1-1/4	.0020 - .0041	1.9881	2.6173	2.0390	.0740	1.9606	1.8890	1.8370	.1250	.6250
RJ200UI-03-24	1-1/2	.0020 - .0041	2.3634	2.9921	2.4630	.0950	2.3358	2.2410	2.1520	.1620	.7500
RJ200UI-03-32	2	.0024 - .0051	2.9881	3.9921	3.2490	.1110	2.9606	2.8390	2.7750	.1890	1.0000

Housing Bore Recommendations

Nominal ID Size	Min.	Max.
3/8	0.6250	0.6257
1/2	0.8750	0.8758
5/8	1.1250	1.1258
3/4	1.2500	1.2510
1	1.5625	1.5635
1-1/4	2.0000	2.0010
1-1/2	2.3750	2.3760
2	3.0000	3.0010

Load Data

Part No.	F max, dynamic p = 725 psi (lbs)	F max, static p = 5075 psi (lbs)
RJ200UI-03-06	118	828
RJ200UI-03-08	225	1575
RJ200UI-03-10	338	2365
RJ200UI-03-12	439	3077
RJ200UI-03-16	811	5678
RJ200UI-03-20	1184	8287
RJ200UI-03-24	1622	11358
RJ200UI-03-32	2885	20198

Also available with liners:

JUI-01

E7UI-01

TUI-01

[78] According to igus® testing method ➤ Page 1096
[82] Design standards ➤ Page 1001
Please note: Installation instructions ➤ Page 1003

DryLin® R Linear - Product range

Closed, anodized aluminum adapter - iglide® E7 liner
For steel, hard chromed steel, and stainless steel

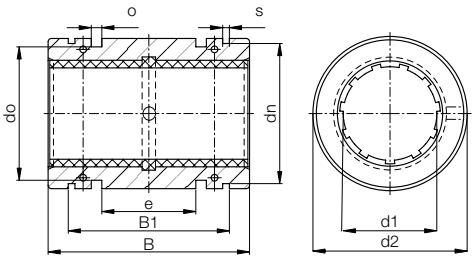

- Anodized aluminum adapter
- Dimensionally interchangeable with linear ball bearings
- Equipped with liner made of iglide® E7
  Temperature range -40°F to +194°F (-40°C to +90°C)
  E7UI-01 (standard)
- T500 liner optional for chemicals/high temps
  (up to 482°F for steel housing, 356°F for aluminum)
- Suitable shafting: case-hardened, 300 series stainless, hard-chrome and hard-stainless steel

Order key

Type						Size	
R	E7	U	I	-	01	-	10
Closed	iglide® Material	Liner	Inch		Standard		Diameter

iglide® material options:
iglide® J: All around material
iglide® J200: Best for aluminum shafts
iglide® E7: Best for steel/stainless steel shafts
iglide® T500 (X)*: For high temps up to 356°F (180°C) in aluminum adapter

Dimensions (inch)

Part No.	Nominal Size	Tolerance[78]	d2 ISO h7	B ISO h10	B1 ISO H10	s	dn	e	o +.004	do
RE7UI-01-06	3/8	.0016 -.0032	.6250	.8700	.644	.0410	.5870	.243	.0610	.5660
RE7UI-01-08	1/2	.0016 -.0032	.8750	1.2500	.979	.0520	.8200	.281	.1250	.7120
RE7UI-01-10	5/8	.0016 -.0032	1.1250	1.5000	1.124	.0620	1.0600	.312	.1250	.9620
RE7UI-01-12	3/4	.0016 -.0032	1.2500	1.6200	1.186	.0620	1.1770	.312	.1250	1.0870
RE7UI-01-16	1	.0016 -.0032	1.5625	2.2500	1.773	.0740	1.4710	.500	.1250	1.3990
RE7UI-01-20	1-1/4	.0020 -.0041	2.0000	2.6200	2.023	.0740	1.8890	.625	.1250	1.8370
RE7UI-01-24	1-1/2	.0020 -.0041	2.3750	3.0000	2.440	.0950	2.2410	.750	.1620	2.1520
RE7UI-01-32	2	.0024 -.0051	3.0000	4.0000	3.222	.1110	2.8390	1.000	.1890	2.7750

Housing Bore Recommendations

Nominal ID Size	Min.	Max.
3/8	0.6250	0.6257
1/2	0.8750	0.8758
5/8	1.1250	1.1258
3/4	1.2500	1.2510
1	1.5625	1.5635
1-1/4	2.0000	2.0010
1-1/2	2.3750	2.3760
2	3.0000	3.0010

Load Data

Part No.	F max, dynamic p = 725 psi (lbs)	F max, static p = 5075 psi (lbs)
RE7UI-01-06	118	828
RE7UI-01-08	225	1575
RE7UI-01-10	338	2365
RE7UI-01-12	439	3077
RE7UI-01-16	811	5678
RE7UI-01-20	1184	8287
RE7UI-01-24	1622	11358
RE7UI-01-32	2885	20198

Also available with liners:

JUI-01

J200UI-01

TUI-01

[78] According to igus® testing method ➤ Page 1096
[82] Design standards ➤ Page 1001
Please note: Installation instructions ➤ Page 1003

DryLin® R Linear - Product range

Closed, aluminum adapter - Self-aligning - iglide® E7 liner
For steel, hard chromed steel, and stainless steel

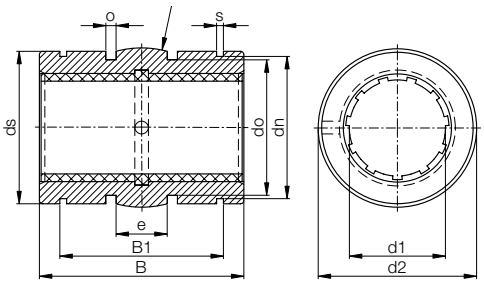

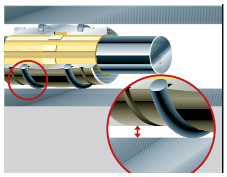

- Anodized aluminum adapter
- Dimensionally interchangeable with linear ball bearings
- Equipped with liner made of iglide® E7
  Temperature range -40°F to +194°F (-40°C to +90°C)
  E7UI-01 (standard)
- T500 liner optional for chemicals/high temps
  (up to 482°F for steel housing, 356°F for aluminum)
- Suitable shafting: case-hardened, 300 series stainless, hard-chrome and hard-stainless steel

Order key

Type					Size
R	E7	U	I	- 03	- 10
Closed	iglide® Material	Liner	Inch	Self-aligning	Diameter

iglide® material options:
iglide® J: All around material
iglide® J200: Best for aluminum shafts
iglide® E7: Best for steel/stainless steel shafts
iglide® T500 (X)*: For high temps up to 356°F (180°C) in aluminum adapter

Dimensions (inch)

Part No.	Nominal Size	Tolerance**	d2 ISO h8	B ISO h10	B1 ISO H10	s	ds	dn ISO h10	do	o -0.004	e
RE7UI-03-06	3/8	.0016 - .0032	.6173	.8713	.6520	.0410	.6055	.5870	.5240	.0610	.2430
RE7UI-03-08	1/2	.0016 - .0032	.8673	1.2461	.9870	.0520	.8556	.8200	.7120	.1250	.2815
RE7UI-03-10	5/8	.0016 - .0032	1.1173	1.4961	1.1360	.0620	1.1055	1.0600	.9620	.1250	.3125
RE7UI-03-12	3/4	.0016 - .0032	1.2421	1.6173	1.1980	.0620	1.2300	1.1770	1.0870	.1250	.3125
RE7UI-03-16	1	.0016 - .0032	1.5547	2.2421	1.7890	.0740	1.5271	1.4710	1.3990	.1250	.5000
RE7UI-03-20	1-1/4	.0020 - .0041	1.9881	2.6173	2.0390	.0740	1.9606	1.8890	1.8370	.1250	.6250
RE7UI-03-24	1-1/2	.0020 - .0041	2.3634	2.9921	2.4630	.0950	2.3358	2.2410	2.1520	.1620	.7500
RE7UI-03-32	2	.0024 - .0051	2.9881	3.9921	3.2490	.1110	2.9606	2.8390	2.7750	.1890	1.0000

Housing Bore Recommendations

Nominal ID Size	Min.	Max.
3/8	0.6250	0.6257
1/2	0.8750	0.8758
5/8	1.1250	1.1258
3/4	1.2500	1.2510
1	1.5625	1.5635
1-1/4	2.0000	2.0010
1-1/2	2.3750	2.3760
2	3.0000	3.0010

Load Data

Part No.	F max, dynamic p = 725 psi (lbs)	F max, static p = 5075 psi (lbs)
RE7UI-03-06	118	828
RE7UI-03-08	225	1575
RE7UI-03-10	338	2365
RE7UI-03-12	439	3077
RE7UI-03-16	811	5678
RE7UI-03-20	1184	8287
RE7UI-03-24	1622	11358
RE7UI-03-32	2885	20198

Also available with liners:

JUI-01

J200UI-01

TUI-01

78) According to igus® testing method ➤ Page 1096
82) Design standards ➤ Page 1001
Please note: Installation instructions ➤ Page 1003

DryLin® R Linear - Product range

Closed, 303 stainless steel adapter (1.4305) - iglide® J liner, inch

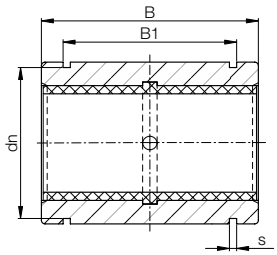

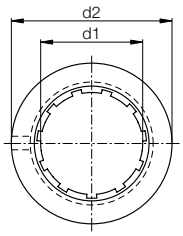

- 303 Stainless steel adapter (1.4305)
- Dimensionally interchangeable with linear ball bearings
- Equipped with liner made of iglide® J
  Temperature range -40°F to +194°F (-40°C to +90°C)
  JUI-01 (standard)
- T500 liner optional for chemicals/high temps
  (up to 482°F for steel housing)
- Suitable shafting for iglide® J: DryLin® AWI aluminum, case-hardened, 300 series stainless Best shafting for T500: hard-chrome and hard-stainless steel

Order key

Type					Size	Size
R	J	U	I	- 01	- 12	- ESR
Closed	iglide® Material	Liner	Inch	Standard	Diameter	Stainless steel

iglide® material options:
iglide® J: All around material
iglide® J200: Best for aluminum shafts
iglide® E7: Best for steel/stainless steel shafts
iglide® T500 (X)*: For high temps up to 356°F (180°C) in aluminum adapter

Dimensions (inch)

Part No.	Nominal Size	Tolerance[78]	d2 ISO h7	B ISO h10	B1 ISO H10	s	dn	e	o +.004	do
RJUI-01-08ESR	1/2	.0016 -.0032	.8750	1.2500	.979	.0520	.8200	.281	.1250	.7120
RJUI-01-10ESR	5/8	.0016 -.0032	1.1250	1.5000	1.124	.0620	1.0600	.312	.1250	.9620
RJUI-01-12ESR	3/4	.0016 -.0032	1.2500	1.6200	1.186	.0620	1.1770	.312	.1250	1.0870
RJUI-01-16ESR	1	.0016 -.0032	1.5625	2.2500	1.773	.0740	1.4710	.500	.1250	1.3990
RJUI-01-20ESR	1-1/4	.0020 -.0041	2.0000	2.6200	2.023	.0740	1.8890	.625	.1250	1.8370
RJUI-01-24ESR	1-1/2	.0020 -.0041	2.3750	3.0000	2.440	.0950	2.2410	.750	.1620	2.1520

Housing Bore Recommendations

Nominal ID Size	Min.	Max.
1/2	0.8750	0.8758
5/8	1.1250	1.1258
3/4	1.2500	1.2510
1	1.5625	1.5635
1-1/4	2.0000	2.0010
1-1/2	2.3750	2.3760

DryLin® STAINLESS STEEL

Load Data

Part No.	F max, dynamic p = 725 psi (lbs)	F max, static p = 5075 psi (lbs)
RJUI-01-08ESR	225	1575
RJUI-01-10ESR	338	2365
RJUI-01-12ESR	439	3077
RJUI-01-16ESR	811	5678
RJUI-01-20ESR	1184	8287
RJUI-01-24ESR	1622	11358

Also available with liners:

JUI-01

J200UI-01

TUI-01

[78] According to igus® testing method ➤ Page 1096
[82] Design standards ➤ Page 1001
Please note: Installation instructions ➤ Page 1003

DryLin® R Linear - Product range

Closed, 303 stainless steel adapter (1.4305 - Self-aligning - iglide® J liner

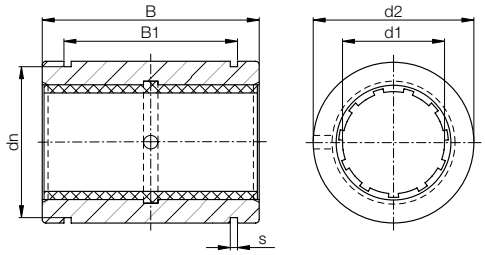

- 303 Stainless steel adapter (1.4305)
- Dimensionally interchangeable with linear ball bearings
- Equipped with liner made of iglide® J
  Temperature range -40°F to +194°F (-40°C to +90°C)
  JUI-01 (standard)
- T500 liner optional for chemicals/high temps
  (up to 482°F for steel housing)
- Suitable shafting for iglide® J: DryLin® AWI aluminum, case-hardened, 300 series stainless Best shafting for T500: hard-chrome and hard-stainless steel

Order key

Type					Size	Size
R	J	U	I	- 03 -	12	- ESR
Closed	iglide® Material	Liner	Inch	Self-aligning	Diameter	Stainless steel

iglide® material options:
iglide® J: All around material
iglide® J200: Best for aluminum shafts
iglide® E7: Best for steel/stainless steel shafts
iglide® T500 (X)*: For high temps up to 356°F (180°C) in aluminum adapter, up to 482°F (250°C) in steel housing

Dimensions (inch)

Part No.	Nominal Size	Tolerance**	d2 ISO h8	B ISO h10	B1 ISO H10	s	ds	dn ISO h10	do	o -0.004	e
RJUI-03-08ESR	1/2	.0016 - .0032	.8673	1.2461	.9870	.0520	.8556	.8200	.7120	.1250	.2815
RJUI-03-10ESR	5/8	.0016 - .0032	1.1173	1.4961	1.1360	.0620	1.1055	1.0600	.9620	.1250	.3125
RJUI-03-12ESR	3/4	.0016 - .0032	1.2421	1.6173	1.1980	.0620	1.2300	1.1770	1.0870	.1250	.3125
RJUI-03-16ESR	1	.0016 - .0032	1.5547	2.2421	1.7890	.0740	1.5271	1.4710	1.3990	.1250	.5000
RJUI-03-20ESR	1-1/4	.0020 - .0041	1.9881	2.6173	2.0390	.0740	1.9606	1.8890	1.8370	.1250	.6250
RJUI-03-24ESR	1-1/2	.0020 - .0041	2.3634	2.9921	2.4630	.0950	2.3358	2.2410	2.1520	.1620	.7500

Housing Bore Recommendations

Nominal ID Size	Min.	Max.
1/2	0.8750	0.8758
5/8	1.1250	1.1258
3/4	1.2500	1.2510
1	1.5625	1.5635
1-1/4	2.0000	2.0010
1-1/2	2.3750	2.3760

DryLin® STAINLESS STEEL

Load Data

Part No.	F max, dynamic p = 725 psi (lbs)	F max, static p = 5075 psi (lbs)
RJUI-03-08ESR	225	1575
RJUI-03-10ESR	338	2365
RJUI-03-12ESR	439	3077
RJUI-03-16ESR	811	5678
RJUI-03-20ESR	1184	8287
RJUI-03-24ESR	1622	11358

Also available with liners:

JUI-01

J200UI-01

TUI-01

78) According to igus® testing method ➤ Page 1096
82) Design standards ➤ Page 1001
Please note: Installation instructions ➤ Page 1003

DryLin® R Linear - Product range

Split, anodized aluminum adapter - iglide® J liner

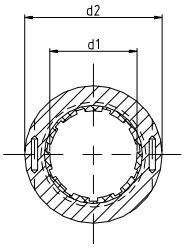

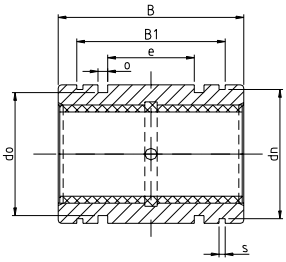

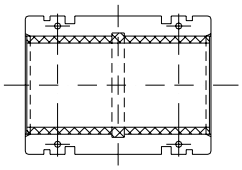

- Anodized aluminum adapter
- Dimensionally interchangeable with linear ball bearings
- Equipped with liner made of iglide® J
  Temperature range -40°F to +194°F, JUI-01 (standard)
- T500 liner optional for chemicals/high temps
  (356°F for aluminum)
- Suitable shafting for iglide® J: DryLin® AWI aluminum, case-hardened, 300 series stainless
  Best shafting for T500: hard-chrome and hard-stainless steel

Order key

Type					Size
T	J	U	I	- 01-10	
Split	iglide® Material	Liner	Inch	Standard	Diameter

iglide® material options:
iglide® J: All around material
iglide® J200: Best for aluminum shafts
iglide® E7: Best for steel/stainless steel shafts
iglide® T500 (X)*: For high temps up to 356°F (180°C) in aluminum adapter

Dimensions (inch)

Part No.	Nominal Size	Tolerance[78]	d2 ISO h7	B ISO h10	B1 ISO H10	s	dn	e	o +.004	do
TJUI-01-08	1/2	.0016 -.0036	.8750	1.2500	.979	.0520	.8200	.281	.1250	.7120
TJUI-01-10	5/8	.0016 -.0036	1.1250	1.5000	1.124	.0620	1.0600	.312	.1250	.9620
TJUI-01-12	3/4	.0016 -.0036	1.2500	1.6200	1.186	.0620	1.1770	.312	.1250	1.0870
TJUI-01-16	1	.0016 -.0036	1.5625	2.2500	1.773	.0740	1.4710	.500	.1250	1.3990
TJUI-01-20	1-1/4	.0020 -.0039	2.0000	2.6200	2.023	.0740	1.8890	.625	.1250	1.8370
TJUI-01-24	1-1/2	.0020 -.0047	2.3750	3.0000	2.440	.0950	2.2410	.750	.1620	2.1520
TJUI-01-32	2	.0024 -.0057	3.0000	4.0000	3.222	.1110	2.8390	1.000	.1890	2.7750

Housing Bore Recommendations

Nominal ID Size	Min.	Max.
1/2	0.8750	0.8758
5/8	1.1250	1.1258
3/4	1.2500	1.2510
1	1.5625	1.5635
1-1/4	2.0000	2.0010
1-1/2	2.3750	2.3760
2	3.0000	3.0010

Load Data

Part No.	F max, dynamic p = 725 psi (lbs)	F max, static p = 5075 psi (lbs)
TJUI-01-08	225	1575
TJUI-01-10	338	2365
TJUI-01-12	439	3077
TJUI-01-16	811	5678
TJUI-01-20	1184	8287
TJUI-01-24	1622	11358
TJUI-01-32	2885	20198

Also available with liners:

J200UI-01

E7UI-01

TUI-01

[78] According to igus® testing method ➤ Page 1096
[82] Design standards ➤ Page 1001
Please note: Installation instructions ➤ Page 1003

DryLin® R Linear - Product range

Split, anodized aluminum adapter - Low Clearance - iglide® J liner

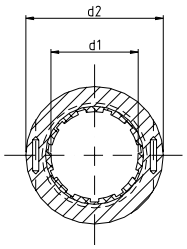

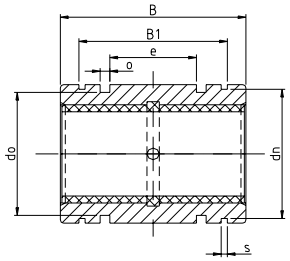

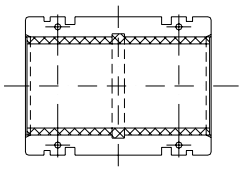

- Anodized aluminum adapter
- Dimensionally interchangeable with linear ball bearings
- Equipped with liner made of iglide® J
  Temperature range -40°F to +194°F
  JUI-01 (standard)
- T500 liner optional for chemicals/high temps
  (356°F for aluminum)
- Suitable shafting for iglide® J: DryLin® AWI aluminum, case-hardened, 300 series stainless
  Best shafting for T500: hard-chrome and hard-stainless steel

Order key

Type						Size
T	J	U	I	-	21	-10
Split	iglide® Material	Liner	Inch		Low clearance	Diameter

iglide® material options:
iglide® J: All around material
iglide® J200: Best for aluminum shafts
iglide® E7: Best for steel/stainless steel shafts
iglide® T500 (X)*: For high temps up to 356°F (180°C) in aluminum adapter

Dimensions (inch)

Part No.	Nominal Size	Tolerance[78]	d2 ISO h7	B ISO h10	B1 ISO H10	s	dn	e	o +.004	do
TJUI-21-08	1/2	.0008 - .0018	.8750	1.2500	.979	.0520	.8200	.281	.1250	.7120
TJUI-21-10	5/8	.0008 - .0018	1.1250	1.5000	1.124	.0620	1.0600	.312	.1250	.9620
TJUI-21-12	3/4	.0008 - .0018	1.2500	1.6200	1.186	.0620	1.1770	.312	.1250	1.0870
TJUI-21-16	1	.0008 - .0018	1.5625	2.2500	1.773	.0740	1.4710	.500	.1250	1.3990
TJUI-21-20	1-1/4	.0010 - .0020	2.0000	2.6200	2.023	.0740	1.8890	.625	.1250	1.8370
TJUI-21-24	1-1/2	.0010 - .0024	2.3750	3.0000	2.440	.0950	2.2410	.750	.1620	2.1520
TJUI-21-32	2	.0012 - .0029	3.0000	4.0000	3.222	.1110	2.8390	1.000	.1890	2.7750

Housing Bore Recommendations

Nominal ID Size	Min.	Max.
1/2	0.8750	0.8758
5/8	1.1250	1.1258
3/4	1.2500	1.2510
1	1.5625	1.5635
1-1/4	2.0000	2.0010
1-1/2	2.3750	2.3760
2	3.0000	3.0010

Load Data

Part No.	F max, dynamic p = 725 psi (lbs)	F max, static p = 5075 psi (lbs)
TJUI-21-08	225	1575
TJUI-21-10	338	2365
TJUI-21-12	439	3077
TJUI-21-16	811	5678
TJUI-21-20	1184	8287
TJUI-21-24	1622	11358
TJUI-21-32	2885	20198

Also available with liners:

J200UI-01

E7UI-01

TUI-01

[78] According to igus® testing method ➤ Page 1096
[82] Design standards ➤ Page 1001
Please note: Installation instructions ➤ Page 1003

DryLin® R Linear - Product range

Split, anodized aluminum adapter - Self-aligning - iglide® J liner

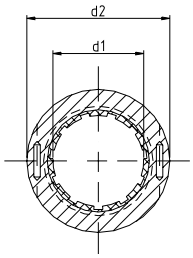

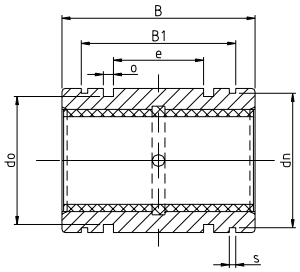

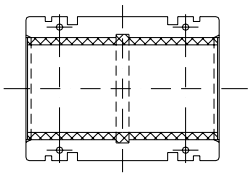

Order key

Type						Size
T	J	U	I	-	03	-10
Split	iglide® Material	Liner	Inch		Self-aligning	Diameter

- Anodized aluminum adapter
- Dimensionally interchangeable with linear ball bearings
- Equipped with liner made of iglide® J
  Temperature range -40°F to +194°F
  JUI-01 (standard)
- T500 liner optional for chemicals/high temps
  (356°F for aluminum)
- Suitable shafting for iglide® J: DryLin® AWI aluminum, case-hardened, 300 series stainless
  Best shafting for T500: hard-chrome and hard-stainless steel

iglide® material options:
iglide® J: All around material
iglide® J200: Best for aluminum shafts
iglide® E7: Best for steel/stainless steel shafts
iglide® T500 (X)*: For high temps up to 356°F (180°C) in aluminum adapter

Dimensions (inch)

Part No.	Nominal Size	Tolerance[78]	d2 ISO h7	B ISO h10	B1 ISO H10	s	dn	e	o +.004	do	ds h10
TJUI-03-08	1/2	.0016 - .0036	.8750	1.2500	.979	.0520	.8200	.281	.1250	.7120	0.8563
TJUI-03-10	5/8	.0016 - .0036	1.1250	1.5000	1.124	.0620	1.0600	.312	.1250	.9620	1.1039
TJUI-03-12	3/4	.0016 - .0036	1.2500	1.6200	1.186	.0620	1.1770	.312	.1250	1.0870	1.2276
TJUI-03-16	1	.0016 - .0036	1.5625	2.2500	1.773	.0740	1.4710	.500	.1250	1.3990	1.5350
TJUI-03-20	1-1/4	.0020 - .0039	2.0000	2.6200	2.023	.0740	1.8890	.625	.1250	1.8370	1.9654
TJUI-03-24	1-1/2	.0020 - .0047	2.3750	3.0000	2.440	.0950	2.2410	.750	.1620	2.1520	2.3370
TJUI-03-32	2	.0024 - .0057	3.0000	4.0000	3.222	.1110	2.8390	1.000	.1890	2.7750	2.9531

Housing Bore Recommendations

Nominal ID Size	Min.	Max.
1/2	0.8750	0.8758
5/8	1.1250	1.1258
3/4	1.2500	1.2510
1	1.5625	1.5635
1-1/4	2.0000	2.0010
1-1/2	2.3750	2.3760
2	3.0000	3.0010

Load Data

Part No.	F max, dynamic p = 725 psi (lbs)	F max, static p = 5075 psi (lbs)
TJUI-03-08	225	1575
TJUI-03-10	338	2365
TJUI-03-12	439	3077
TJUI-03-16	811	5678
TJUI-03-20	1184	8287
TJUI-03-24	1622	11358
TJUI-03-32	2885	20198

Also available with liners:

J200UI-01

E7UI-01

TUI-01

[78] According to igus® testing method ➤ Page 1096
[82] Design standards ➤ Page 1001
Please note: Installation instructions ➤ Page 1003

DryLin® R Linear - Product range

Split, anodized aluminum adapter - iglide® E7 liner

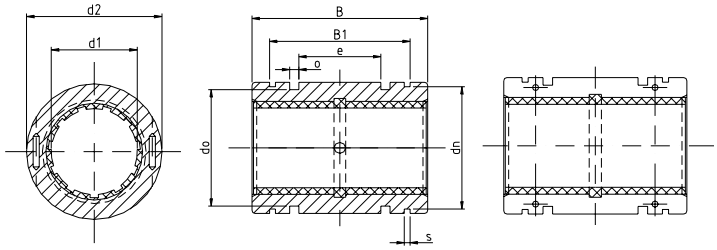

- Anodized aluminum adapter
- Dimensionally interchangeable with linear ball bearings
- Equipped with liner made of iglide® E7
  Temperature range -40°F to +194°F
  E7UI-01 (standard)
- T500 liner optional for chemicals/high temps
  (356°F for aluminum)
- Suitable shafting for iglide® J: case-hardened, 300 series stainless, hard-chrome and hard-stainless steel

Order key

Type					Size
TE7U	I	-	01	-	10
Split	iglide® Material	Liner	Inch	Standard	Diameter

iglide® material options:
iglide® J: All around material
iglide® J200: Best for aluminum shafts
iglide® E7: Best for steel/stainless steel shafts
iglide® T500 (X)*: For high temps up to 356°F (180°C) in aluminum adapter

Dimensions (inch)

Part No.	Nominal Size	Tolerance[78]	d2 ISO h7	B ISO h10	B1 ISO H10	s	dn	e	o +.004	do
TE7UI-01-08	1/2	.0016 -.0036	.8750	1.2500	.979	.0520	.8200	.281	.1250	.7120
TE7UI-01-10	5/8	.0016 -.0036	1.1250	1.5000	1.124	.0620	1.0600	.312	.1250	.9620
TE7UI-01-12	3/4	.0016 -.0036	1.2500	1.6200	1.186	.0620	1.1770	.312	.1250	1.0870
TE7UI-01-16	1	.0016 -.0036	1.5625	2.2500	1.773	.0740	1.4710	.500	.1250	1.3990
TE7UI-01-20	1-1/4	.0020 -.0039	2.0000	2.6200	2.023	.0740	1.8890	.625	.1250	1.8370
TE7UI-01-24	1-1/2	.0020 -.0047	2.3750	3.0000	2.440	.0950	2.2410	.750	.1620	2.1520
TE7UI-01-32	2	.0024 -.0057	3.0000	4.0000	3.222	.1110	2.8390	1.000	.1890	2.7750

Housing Bore Recommendations

Nominal ID Size	Min.	Max.
1/2	0.8750	0.8758
5/8	1.1250	1.1258
3/4	1.2500	1.2510
1	1.5625	1.5635
1-1/4	2.0000	2.0010
1-1/2	2.3750	2.3760
2	3.0000	3.0010

Load Data

Part No.	F max, dynamic p = 725 psi (lbs)	F max, static p = 5075 psi (lbs)
TE7UI-01-08	225	1575
TE7UI-01-10	338	2365
TE7UI-01-12	439	3077
TE7UI-01-16	811	5678
TE7UI-01-20	1184	8287
TE7UI-01-24	1622	11358
TE7UI-01-32	2885	20198

Also available with liners:

JUI-01

J200UI-01

TUI-01

[78] According to igus® testing method ➤ Page 1096
[82] Design standards ➤ Page 1001
Please note: Installation instructions ➤ Page 1003

DryLin® R Linear - Product range

Split, anodized aluminum adapter - Self-aligning - iglide® E7 liner

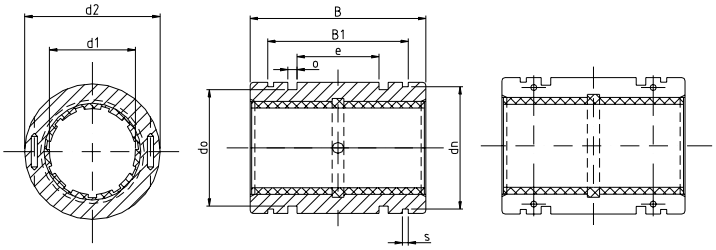

- Anodized aluminum adapter
- Dimensionally interchangeable with linear ball bearings
- Equipped with liner made of iglide® E7
  Temperature range -40°F to +194°F
  E7UI-01 (standard)
- T500 liner optional for chemicals/high temps
  (356°F for aluminum)
- Suitable shafting for iglide® J: case-hardened, 300 series stainless, hard-chrome and hard-stainless steel

Order key

Type					Size
TE7	U	I	- 03	-10	
Split	iglide® Material	Liner	Inch	Self-aligning	Diameter

iglide® material options:
iglide® J: All around material
iglide® J200: Best for aluminum shafts
iglide® E7: Best for steel/stainless steel shafts
iglide® T500 (X)*: For high temps up to 356°F (180°C) in aluminum adapter

Dimensions (inch)

Part No.	Nominal Size	Tolerance[78]	d2 ISO h7	B ISO h10	B1 ISO H10	s	dn	e	o +.004	do	ds h10
TE7UI-03-08	1/2	.0016 - .0036	.8750	1.2500	.979	.0520	.8200	.281	.1250	.7120	0.8563
TE7UI-03-10	5/8	.0016 - .0036	1.1250	1.5000	1.124	.0620	1.0600	.312	.1250	.9620	1.1039
TE7UI-03-12	3/4	.0016 - .0036	1.2500	1.6200	1.186	.0620	1.1770	.312	.1250	1.0870	1.2276
TE7UI-03-16	1	.0016 - .0036	1.5625	2.2500	1.773	.0740	1.4710	.500	.1250	1.3990	1.5350
TE7UI-03-20	1-1/4	.0020 - .0039	2.0000	2.6200	2.023	.0740	1.8890	.625	.1250	1.8370	1.9654
TE7UI-03-24	1-1/2	.0020 - .0047	2.3750	3.0000	2.440	.0950	2.2410	.750	.1620	2.1520	2.3370
TE7UI-03-32	2	.0024 - .0057	3.0000	4.0000	3.222	.1110	2.8390	1.000	.1890	2.7750	2.9531

Housing Bore Recommendations

Nominal ID Size	Min.	Max.
1/2	0.8750	0.8758
5/8	1.1250	1.1258
3/4	1.2500	1.2510
1	1.5625	1.5635
1-1/4	2.0000	2.0010
1-1/2	2.3750	2.3760
2	3.0000	3.0010

Load Data

Part No.	F max, dynamic p = 725 psi (lbs)	F max, static p = 5075 psi (lbs)
TE7UI-03-08	225	1575
TE7UI-03-10	338	2365
TE7UI-03-12	439	3077
TE7UI-03-16	811	5678
TE7UI-03-20	1184	8287
TE7UI-03-24	1622	11358
TE7UI-03-32	2885	20198

Also available with liners:

JUI-01

J200UI-01

TUI-01

[78] According to igus® testing method ➤ Page 1096
[82] Design standards ➤ Page 1001
Please note: Installation instructions ➤ Page 1003

DryLin® R Linear - Product range

Open, anodized aluminum adapter - iglide® J liner

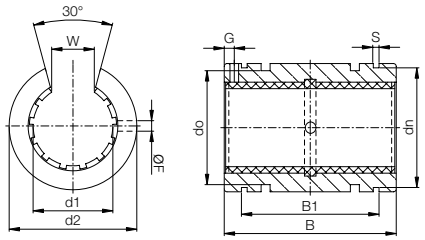

- Anodized aluminum adapter
- Dimensionally interchangeable with linear ball bearings
- Equipped with liner made of iglide® J
  Temperature range -40°F to +194°F, JUIO-01 (standard)
- T500 liner optional for chemicals/high temps
  (up to 482°F for steel housing, 356°F for aluminum)
- Suitable shafting for iglide® J: DryLin® AWI aluminum, case-hardened, 300 series stainless
  Best shafting for T500: hard-chrome and hard-stainless steel

Order key

Type						Size	
O	J	U	I	-	01	-	10
Split	iglide® Material	Liner	Inch		Standard		Diameter

iglide® material options:
iglide® J: All around material
iglide® J200: Best for aluminum shafts
iglide® E7: Best for steel/stainless steel shafts
iglide® T500 (X)*: For high temps up to 356°F (180°C) in aluminum adapter

Dimensions (inch)

Part No..	Ø Shaft	Tolerance[78)]	d2	B	W	s	dn	B1	F	G	do
			ISO h7	ISO h10	±0.012		ISO h10	ISO H10	+0.004	+0.004	
OJUI-01-08	1/2	.0016 -.0032	.8750	1.2500	.3940	.0520	.8200	.979	.1360	.6250	.684
OJUI-01-10	5/8	.0016 -.0032	1.1250	1.5000	.4330	.0620	1.0600	1.124	.1360	.1250	.934
OJUI-01-12	3/4	.0016 -.0032	1.2500	1.6250	.4920	.0620	1.1770	1.186	.1360	.1250	1.059
OJUI-01-16	1	.0016 -.0032	1.5625	2.2500	.6300	.0740	1.4710	1.773	.1360	.1250	1.372
OJUI-01-20	1-1/4	.0020 -.0041	2.0000	2.6250	.7090	.0740	1.8890	2.023	.2010	.1875	1.809
OJUI-01-24	1-1/2	.0020 -.0041	2.3750	3.0000	.8660	.0950	2.2410	2.440	.2010	.1875	2.113
OJUI-01-32	2	.0024 -.0051	3.0000	4.0000	1.1810	.1110	2.8390	3.222	.2650	.3125	2.738

Housing Bore Recommendations

Nominal ID Size	Min.	Max.
1/2	0.8750	0.8758
5/8	1.1250	1.1258
3/4	1.2500	1.2510
1	1.5625	1.5635
1-1/4	2.0000	2.0010
1-1/2	2.3750	2.3760
2	3.0000	3.0010

Load Data

Part No.	F max. dynamic[82)] [lbs] P = 725 psi			F max. static[82)] [lbs] P = 5075 psi		
	0°	90°	180°	0°	90°	180°
OJUI-01-08	226	154	80	1585	1078	555
OJUI-01-10	340	231	118	2378	1617	832
OJUI-01-12	408	277	143	2854	1942	998
OJUI-01-16	590	400	206	4123	2804	1443
OJUI-01-20	1189	809	416	8323	5659	2912
OJUI-01-24	1631	1109	571	11418	7765	3996
OJUI-01-32	2900	1972	1015	20300	13804	7104

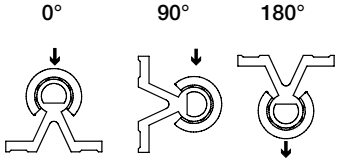

Also available with liners:

J200UI-01

E7UI-01

TUIO-01

[78)] According to igus® testing method ➤ Page 1096
[82)] Design standards ➤ Page 1001
Please note: Installation instructions ➤ Page 1003

DryLin® R Linear - Product range

Open, anodized aluminum adapter - Low clearance - iglide® J liner

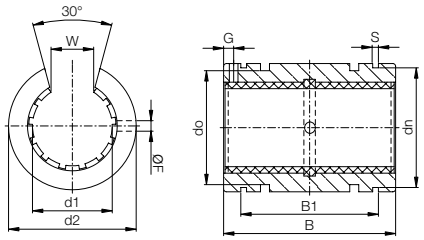

- Anodized aluminum adapter
- Dimensionally interchangeable with linear ball bearings
- Equipped with liner made of iglide® J
  Temperature range -40°F to +194°F, JUIO-20 (low clearance)
- T500 liner optional for chemicals/high temps
  (up to 482°F for steel housing, 356°F for aluminum)
- Suitable shafting for iglide® J: DryLin® AWI aluminum,
  case-hardened, 300 series stainless
  Best shafting for T500: hard-chrome and hard-stainless steel

Order key

Type						Size
O	J	U	I	-	21	-10
Split	iglide® Material	Liner	Inch		Low clearance	Diameter

iglide® material options:
iglide® J: All around material
iglide® J200: Best for aluminum shafts
iglide® E7: Best for steel/stainless steel shafts
iglide® T500 (X)*: For high temps up to 356°F (180°C) in aluminum adapter

Dimensions (inch)

Part No..	Ø Shaft	Tolerance[78)]	d2	B	W	s	dn	B1	F	G	do
			ISO h7	ISO h10	±0.012		ISO h10	ISO H10	+0.004	+0.004	
OJUI-21-08	1/2	.0016 -.0032	.8750	1.2500	.3940	.0520	.8200	.979	.1360	.6250	.684
OJUI-21-10	5/8	.0016 -.0032	1.1250	1.5000	.4330	.0620	1.0600	1.124	.1360	.1250	.934
OJUI-21-12	3/4	.0016 -.0032	1.2500	1.6250	.4920	.0620	1.1770	1.186	.1360	.1250	1.059
OJUI-21-16	1	.0016 -.0032	1.5625	2.2500	.6300	.0740	1.4710	1.773	.1360	.1250	1.372
OJUI-21-20	1-1/4	.0020 -.0041	2.0000	2.6250	.7090	.0740	1.8890	2.023	.2010	.1875	1.809
OJUI-21-24	1-1/2	.0020 -.0041	2.3750	3.0000	.8660	.0950	2.2410	2.440	.2010	.1875	2.113
OJUI-21-32	2	.0024 -.0051	3.0000	4.0000	1.1810	.1110	2.8390	3.222	.2650	.3125	2.738

Housing Bore Recommendations

Nominal ID Size	Min.	Max.
1/2	0.8750	0.8758
5/8	1.1250	1.1258
3/4	1.2500	1.2510
1	1.5625	1.5635
1-1/4	2.0000	2.0010
1-1/2	2.3750	2.3760
2	3.0000	3.0010

Load Data

Part No.	F max. dynamic[82)] [lbs] P = 725 psi			F max. static[82)] [lbs] P = 5075 psi		
	0°	90°	180°	0°	90°	180°
OJUI-21-08	226	154	80	1585	1078	555
OJUI-21-10	340	231	118	2378	1617	832
OJUI-21-12	408	277	143	2854	1942	998
OJUI-21-16	590	400	206	4123	2804	1443
OJUI-21-20	1189	809	416	8323	5659	2912
OJUI-21-24	1631	1109	571	11418	7765	3996
OJUI-21-32	2900	1972	1015	20300	13804	7104

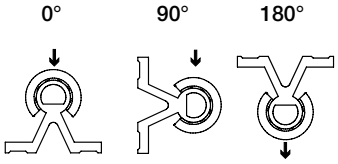

Also available with liners:

J200UI-01

E7UI-01

TUIO-01

[78)] According to igus® testing method ➤ Page 1096
[82)] Design standards ➤ Page 1001
Please note: Installation instructions ➤ Page 1003

DryLin® R Linear - Product range

Open, anodized aluminum adapter - Self-aligning - iglide® J liner

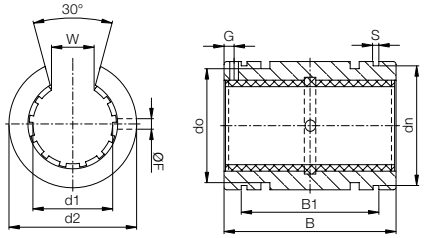

- Anodized aluminum adapter
- Dimensionally interchangeable with linear ball bearings
- Equipped with liner made of iglide® J
  Temperature range -40°F to +194°F, JUIO-01 (standard)
- T500 liner optional for chemicals/high temps
  (up to 482°F for steel housing, 356°F for aluminum)
- Suitable shafting for iglide® J: DryLin® AWI aluminum,
  case-hardened, 300 series stainless
  Best shafting for T500: hard-chrome and hard-stainless steel

Order key

Type						Size
O	J	U	I	-	03-10	
Split	iglide® Material	Liner	Inch	Self-aligning	Diameter	

iglide® material options:
iglide® J: All around material
iglide® J200: Best for aluminum shafts
iglide® E7: Best for steel/stainless steel shafts
iglide® T500 (X)*: For high temps up to 356°F (180°C) in aluminum adapter

Dimensions (inch)

Part No.	Ø Shaft	Tolerance*	d2	ds	F	G	do	B1	s	dn	B	W
			ISO h8	ISO h10	+0.004	+0.004		ISO H10	ISO H10	ISO h10	ISO h10	+0.012
OJUI-03-08	1/2	.0016 - .0032	.8673	.8556	.1360	.6250	.6846	.987	.0520	.8200	1.2461	.3940
OJUI-03-10	5/8	.0016 - .0032	1.1173	1.1055	.1360	.1250	.9346	1.136	.0620	1.0600	1.4961	.4330
OJUI-03-12	3/4	.0016 - .0032	1.2421	1.2300	.1360	.1250	1.0590	1.198	.0620	1.1770	1.6173	.4920
OJUI-03-16	1	.0016 - .0032	1.5547	1.5271	.1360	.1250	1.3720	1.789	.0740	1.4710	2.2421	.6300
OJUI-03-20	1-1/4	.0020 - .0041	1.9881	1.9606	.2010	.1875	1.8094	2.039	.0740	1.8890	2.6173	.7090
OJUI-03-24	1-1/2	.0020 - .0041	2.3634	2.3358	.2010	.1875	2.1130	2.463	.0950	2.2410	2.9921	.8660
OJUI-03-32	2	.0024 - .0051	2.988	2.9606	.2650	.3125	2.7378	3.249	.1110	2.8390	3.9921	1.1810

Housing Bore Recommendations

Nominal ID Size	Min.	Max.
1/2	0.8750	0.8758
5/8	1.1250	1.1258
3/4	1.2500	1.2510
1	1.5625	1.5635
1-1/4	2.0000	2.0010
1-1/2	2.3750	2.3760
2	3.0000	3.0010

Load Data

Part No.	F max. dynamic[82] [lbs] P = 725 psi			F max. static[82] [lbs] P = 5075 psi		
	0°	90°	180°	0°	90°	180°
OJUI-03-08	226	154	80	1585	1078	555
OJUI-03-10	340	231	118	2378	1617	832
OJUI-03-12	408	277	143	2854	1942	998
OJUI-03-16	590	400	206	4123	2804	1443
OJUI-03-20	1189	809	416	8323	5659	2912
OJUI-03-24	1631	1109	571	11418	7765	3996
OJUI-03-32	2900	1972	1015	20300	13804	7104

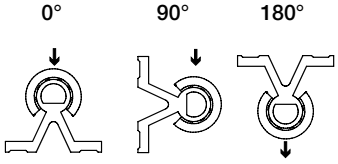

Also available with liners:

J200UI-01

E7UI-01

TUIO-01

[78] According to igus® testing method ➤ Page 1096
[82] Design standards ➤ Page 1001
Please note: Installation instructions ➤ Page 1003

DryLin® R Linear - Product range

Open, anodized aluminum adapter - iglide® E7 liner
For steel, hard chrome steel, and stainless steel

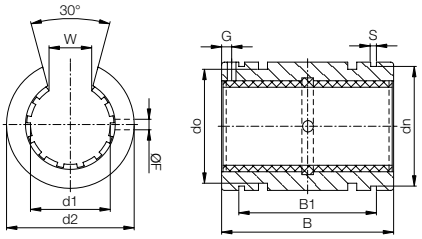

- Anodized aluminum adapter
- Dimensionally interchangeable with linear ball bearings
- Equipped with liner made of iglide® E7
  Temperature range -40°F to +194°F, E7UIO-01 (standard)
- T500 liner optional for chemicals/high temps
  (up to 482°F for steel housing, 356°F for aluminum)
- Suitable shafting: case-hardened, 300 series stainless, hard-chrome and hard-stainless steel

Order key

Type						Size	
OE7U	I	-	01	-	10		
Open	iglide® Material	Liner	Inch		Standard		Diameter

iglide® material options:
iglide® J: All around material
iglide® J200: Best for aluminum shafts
iglide® E7: Best for steel/stainless steel shafts
iglide® T500 (X)*: For high temps up to 356°F (180°C) in aluminum adapter

Dimensions (inch)

Part No..	Ø Shaft	Tolerance[78)]	d2	B	W	s	dn	B1	F	G	do
			ISO h7	ISO h10	±0.012		ISO h10	ISO H10	+0.004	+0.004	
OE7UI-01-08	1/2	.0016 -.0032	.8750	1.2500	.3940	.0520	.8200	.979	.1360	.6250	.684
OE7UI-01-10	5/8	.0016 -.0032	1.1250	1.5000	.4330	.0620	1.0600	1.124	.1360	.1250	.934
OE7UI-01-12	3/4	.0016 -.0032	1.2500	1.6250	.4920	.0620	1.1770	1.186	.1360	.1250	1.059
OE7UI-01-16	1	.0016 -.0032	1.5625	2.2500	.6300	.0740	1.4710	1.773	.1360	.1250	1.372
OE7UI-01-20	1-1/4	.0020 -.0041	2.0000	2.6250	.7090	.0740	1.8890	2.023	.2010	.1875	1.809
OE7UI-01-24	1-1/2	.0020 -.0041	2.3750	3.0000	.8660	.0950	2.2410	2.440	.2010	.1875	2.113
OE7UI-01-32	2	.0024 -.0051	3.0000	4.0000	1.1810	.1110	2.8390	3.222	.2650	.3125	2.738

Housing Bore Recommendations

Nominal ID Size	Min.	Max.
1/2	0.8750	0.8758
5/8	1.1250	1.1258
3/4	1.2500	1.2510
1	1.5625	1.5635
1-1/4	2.0000	2.0010
1-1/2	2.3750	2.3760
2	3.0000	3.0010

Load Data

Part No.	F max. dynamic[82)] [lbs] P = 725 psi			F max. static[82)] [lbs] P = 5075 psi		
	0°	90°	180°	0°	90°	180°
OE7UI-01-08	226	154	80	1585	1078	555
OE7UI-01-10	340	231	118	2378	1617	832
OE7UI-01-12	408	277	143	2854	1942	998
OE7UI-01-16	590	400	206	4123	2804	1443
OE7UI-01-20	1189	809	416	8323	5659	2912
OE7UI-01-24	1631	1109	571	11418	7765	3996
OE7UI-01-32	2900	1972	1015	20300	13804	7104

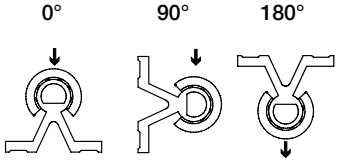

Also available with liners:

J200UI-01

E7UI-01

TUIO-01

[78)] According to igus® testing method ➤ Page 1096
[82)] Design standards ➤ Page 1001
Please note: Installation instructions ➤ Page 1003

DryLin® R Linear - Product range

Open, anodized aluminum adapter - Self-aligning - iglide® E7 liner For steel, hard chrome steel, and stainless steel

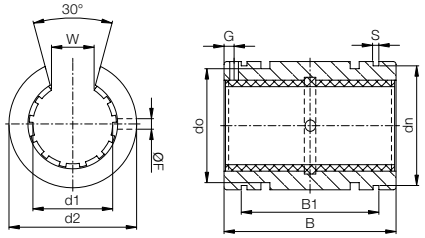

- Anodized aluminum adapter
- Dimensionally interchangeable with linear ball bearings
- Equipped with liner made of iglide® J
  Temperature range -40°F to +194°F
  JUIO-01 (standard)
- T500 liner optional for chemicals/high temps
  (up to 482°F for steel housing, 356°F for aluminum)
- Suitable shafting for iglide® J: case-hardened, 300 series stainless, hard-chrome and hard-stainless steel

Order key

Type					Size
OE7U	I	-	03	-10	
Open	iglide® Material	Liner	Inch	Self-aligning	Diameter

iglide® material options:
iglide® J: All around material
iglide® J200: Best for aluminum shafts
iglide® E7: Best for steel/stainless steel shafts
iglide® T500 (X)*: For high temps up to 356°F (180°C) in aluminum adapter

Dimensions (inch)

Part No.	Ø Shaft	Tolerance*	d2	ds	F	G	do	B1	s	dn	B	W
			ISO h8	ISO h10	+0.004	+0.004		ISO H10	ISO H10	ISO h10	ISO h10	+0.012
OE7UI-03-08	1/2	.0016 - .0032	.8673	.8556	.1360	.6250	.6846	.987	.0520	.8200	1.2461	.3940
OE7UI-03-10	5/8	.0016 - .0032	1.1173	1.1055	.1360	.1250	.9346	1.136	.0620	1.0600	1.4961	.4330
OE7UI-03-12	3/4	.0016 - .0032	1.2421	1.2300	.1360	.1250	1.0590	1.198	.0620	1.1770	1.6173	.4920
OE7UI-03-16	1	.0016 - .0032	1.5547	1.5271	.1360	.1250	1.3720	1.789	.0740	1.4710	2.2421	.6300
OE7UI-03-20	1-1/4	.0020 - .0041	1.9881	1.9606	.2010	.1875	1.8094	2.039	.0740	1.8890	2.6173	.7090
OE7UI-03-24	1-1/2	.0020 - .0041	2.3634	2.3358	.2010	.1875	2.1130	2.463	.0950	2.2410	2.9921	.8660
OE7UI-03-32	2	.0024 - .0051	2.988	2.9606	.2650	.3125	2.7378	3.249	.1110	2.8390	3.9921	1.1810

Housing Bore Recommendations

Nominal ID Size	Min.	Max.
1/2	0.8750	0.8758
5/8	1.1250	1.1258
3/4	1.2500	1.2510
1	1.5625	1.5635
1-1/4	2.0000	2.0010
1-1/2	2.3750	2.3760
2	3.0000	3.0010

Load Data

Part No.	F max. dynamic[82] [lbs] P = 725 psi			F max. static[82] [lbs] P = 5075 psi		
	0°	90°	180°	0°	90°	180°
OE7UI-03-08	226	154	80	1585	1078	555
OE7UI-03-10	340	231	118	2378	1617	832
OE7UI-03-12	408	277	143	2854	1942	998
OE7UI-03-16	590	400	206	4123	2804	1443
OE7UI-03-20	1189	809	416	8323	5659	2912
OE7UI-03-24	1631	1109	571	11418	7765	3996
OE7UI-03-32	2900	1972	1015	20300	13804	7104

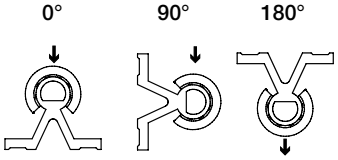

Also available with liners:

J200UI-01

E7UI-01

TUIO-01

[78] According to igus® testing method ➤ Page 1096
[82] Design standards ➤ Page 1001
Please note: Installation instructions ➤ Page 1003

DryLin® R Linear - Product range

DryLin® S aluminum shaft, inch

Properties

Material: 6061-T6
Tolerance: +0/-0.001”
Straightness: .001”/ft
Hardness: 75 HB
Surface: hard-anodized
mil-A-8625 Type III Class I
< .002”

Layer Thickness: > .0016”
Surface Hardness: 450 - 550 HV
approx. (60 RC)
Roughness: RMS = 4-20
Spec. Electr. Resistance: $4*10^{11}$ Ohm mm^2/m
Chemical Resistance: 2 < ph < 9

Dimensions (inch)

Part No.	Design	Diameter	Max. Length*	Weight (lbs/ft)
AWI-04- L in inches	Solid	.2500	72	.057
AWI-06- L in inches	Solid	.3750	72	.130
AWI-08- L in inches	Solid	.5000	72	.231
AWI-10- L in inches	Solid	.6250	72	.361
AWI-12- L in inches	Solid	.7500	72	.519
AWI-16- L in inches	Solid	1.0000	72	.924
AWI-20- L in inches	Solid	1.2500	72	1.44
AWI-24- L in inches	Solid	1.5000	72	2.08
AWI-32- L in inches	Solid	2.0000	72	3.70

*Shaft supports available upon request

Longer sizes available upon request
Metric sizes are also available. See Page 49.61

DryLin® S Supported Aluminum Shaft, AWUI-XX

Properties

Material: 6063-T6
Surface: hard-anodized aluminum
mil-A-8625 Type III Class I
< .002”

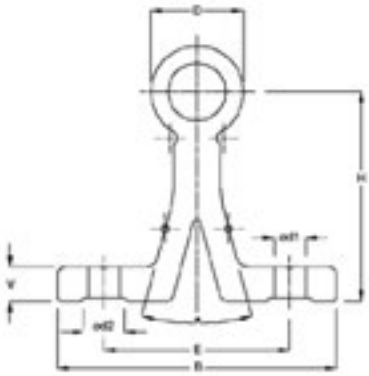

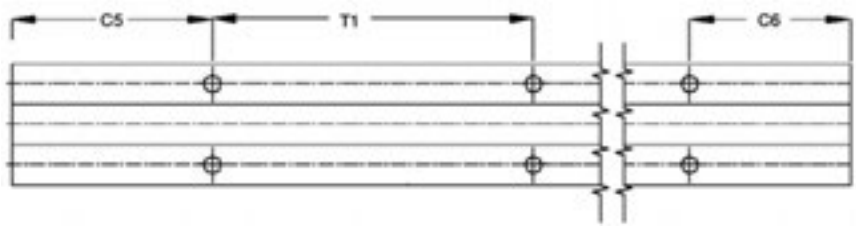

Dimensions (inch)

Part No.	D	B	H ±0.008	V	d1	d2	(°)	E ±.008	T1 Bore Spacing	C5/C6 min.	C5/C6 max.	Max Length	Weight (lbs/ft)
AWUI-08- L in mm	.500 (-.006)	1.50	1.125	.190	.169	.217	30°	1.000	4.00	1	2.95	144	.6
AWUI-10- L in mm	.625 (.006)	1.62	1.125	.252	.193	.256	30°	1.125	4.00	1	3.95	144	.9
AWUI-12- L in mm	.750 (-.006)	1.75	1.500	.252	.220	.276	30°	1.250	6.00	1	3.95	144	1.2
AWUI-16- L in mm	1.000 (-.006)	2.13	1.750	.252	.280	.335	30°	1.500	6.00	1	3.95	144	1.5
AWUI-24- L in mm	1.500 (-.006)	3.00	2.500	.374	.343	.394	30°	2.250	8.00	1	3.95	144	2.6

Please contact igus for additional sizes
Order example: AWUI-16-500 corresponds to supported aluminum shaft diameter 1”, 500 mm long

Other shaft materials available upon request

DryLin® R Linear - Product range

Closed, pillow block - iglide® J liner

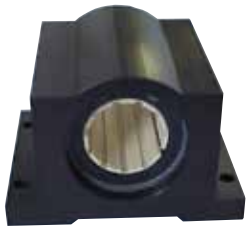

- Closed, anodized aluminum housing
- Liner JUI-01 made of iglide® J is contained according to standard tolerances
- Can be fitted with iglide® T500 liner material for temperatures up to 356°F (180°C)
- Low clearance liners optional
- Dimensionally interchangeable with ball bearings

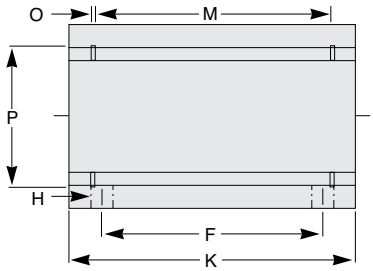

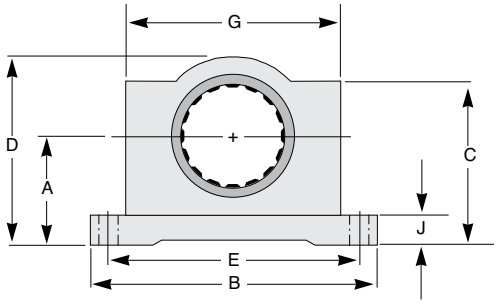

Order key

Type	Options	Size
RJUI	- XX	- 04

Closed	iglide® Material	Liner	Inch	-11 = Standard -13 = Self-aligning -31 = Low clearance	Diameter

iglide® material options:
iglide® J: All around material
iglide® J200: Best for aluminum shafts
iglide® E7: Best for steel/stainless steel shafts
iglide® T500 (X)*: For high temps up to 356°F (180°C) in aluminum adapter

Dimensions (inch)

Part No.	Nom. Size	A ±.001	B	C	D ±.010	E ±.010	F	G	H BOLT	H HOLE	J	K	M	O	P
RJZI-☐-04	1/4	0.437	1.625	0.750	0.813	1.312	0.750	1.000	#6	5/32	0.188	1.188	0.750	0.039	0.532
RJUI-☐-06	3/8	0.500	1.750	0.875	0.938	1.437	0.875	1.125	#6	5/32	0.188	1.313	0.875	0.039	0.665
RJUI-☐-08	1/2	0.687	2.000	1.125	1.250	1.688	1.000	1.375	#6	5/32	0.250	1.688	1.250	0.046	0.931
RJUI-☐-10	5/8	0.875	2.500	1.438	1.625	2.125	1.125	1.750	#8	3/16	0.281	1.938	1.500	0.056	1.197
RJUI-☐-12	3/4	0.937	2.750	1.563	1.750	2.375	1.250	1.875	#8	3/16	0.313	2.063	1.625	0.056	1.330
RJUI-☐-16	1	1.187	3.250	1.938	2.188	2.875	1.750	2.375	#10	7/32	0.375	2.813	2.250	0.068	1.671
RJUI-☐-20	1-1/4	1.500	4.000	2.500	2.813	3.500	2.000	3.000	#10	7/32	0.438	3.625	2.625	0.068	2.122
RJUI-☐-24	1-1/2	1.750	4.750	2.875	3.250	4.125	2.500	3.500	1/4	9/32	0.500	4.000	3.000	0.086	2.519
RJUI-☐-32	2	2.125	6.000	3.625	4.063	5.250	3.250	4.500	3/8	13/32	0.625	5.000	4.000	0.103	3.182

Supplement the part number with one of the following choices.
Example: RJUI-13-04 for a Self-aligning version

For Standard bearing use 11
For Self-aligning bearing use 13
For Low clearance use 31

Load Data

Part No.	Dynamic Load (lbs) P = 725 psi	Static Load (lbs) P = 5075 psi
RJZI-XX-04	135	946
RJUI-XX-06	118	828
RJUI-XX-08	225	1575
RJUI-XX-10	338	2365
RJUI-XX-12	439	3077
RJUI-XX-16	811	5678
RJUI-XX-20	1184	8287
RJUI-XX-24	1622	11358
RJUI-XX-32	2885	20198

DryLin® R Linear - Product range

Open, pillow block - iglide® J liner

- Open, anodized aluminum housing
- Liner JUI-01 made of iglide® J is contained according to standard tolerances
- Can be fitted with iglide® T500 liner material for temperatures up to 356°F (180°C)
- Low clearance liners optional
- Dimensionally interchangeable with ball bearings

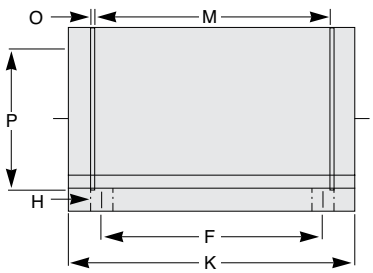

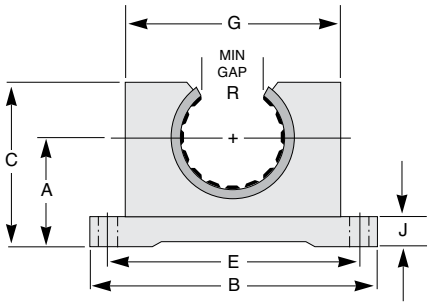

Order key

Type				Options	Size
O	J U I	-	XX	-	08
Open	iglide® Material	Liner	Inch	-11 = Standard -13 = Self-aligning -31 = Low clearance	Diameter

iglide® material options:
iglide® J: All around material
iglide® J200: Best for aluminum shafts
iglide® E7: Best for steel/stainless steel shafts
iglide® T500 (X)*: For high temps up to 356°F (180°C) in aluminum adapter

Dimensions (inch)

Part No.	Nom. Size	A ±.001	B	C	E ±.010	F ±.010	G	H BOLT	H HOLE	J	K	M	O	P	R
OJUI-☐-08	1/2	0.687	2.000	1.125	1.688	1.000	1.375	#6	5/32	0.250	1.688	1.250	0.046	0.931	0.313
OJUI-☐-10	5/8	0.875	2.500	1.438	2.125	1.125	1.750	#8	3/16	0.281	1.938	1.500	0.056	1.197	0.375
OJUI-☐-12	3/4	0.937	2.750	1.563	2.375	1.250	1.875	#8	3/16	0.313	2.063	1.625	0.056	1.330	0.438
OJUI-☐-16	1	1.187	3.250	1.938	2.875	1.750	2.375	#10	7/32	0.375	2.813	2.250	0.068	1.671	0.563
OJUI-☐-20	1-1/4	1.500	4.000	2.500	3.500	2.000	3.000	#10	7/32	0.438	3.625	2.625	0.068	2.122	0.625
OJUI-☐-24	1-1/2	1.750	4.750	2.875	4.125	2.500	3.500	1/4	9/32	0.500	4.000	3.000	0.086	2.519	0.750
OJUI-☐-32	2	2.125	6.000	3.625	5.250	3.250	4.500	3/8	13/32	0.625	5.000	4.000	0.103	3.182	1.000

Supplement the part number with one of the following choices.
Example: OJUI-13-04 for a Self-aligning version

For Standard bearing use 11
For Self-aligning bearing use 13
For Low clearance use 31

Load Data

Part No.	Dynamic Load (lbs) P = 725 psi	Static Load (lbs) P = 5075 psi
OJUI-XX-08	225	1575
OJUI-XX-10	338	2365
OJUI-XX-12	439	3077
OJUI-XX-16	811	5678
OJUI-XX-20	1184	8287
OJUI-XX-24	1622	11358
OJUI-XX-32	2885	20198

DryLin® R Linear - Product range

Closed, twin pillow block - iglide® J liner

- Closed, anodized aluminum housing, twin design
- Liner JUI-01 made of iglide® J is contained according to standard tolerances
- Can be fitted with iglide® T500 liner material for temperatures up to 356°F (180°C)
- Low clearance liners optional
- Dimensionally interchangeable with ball bearings

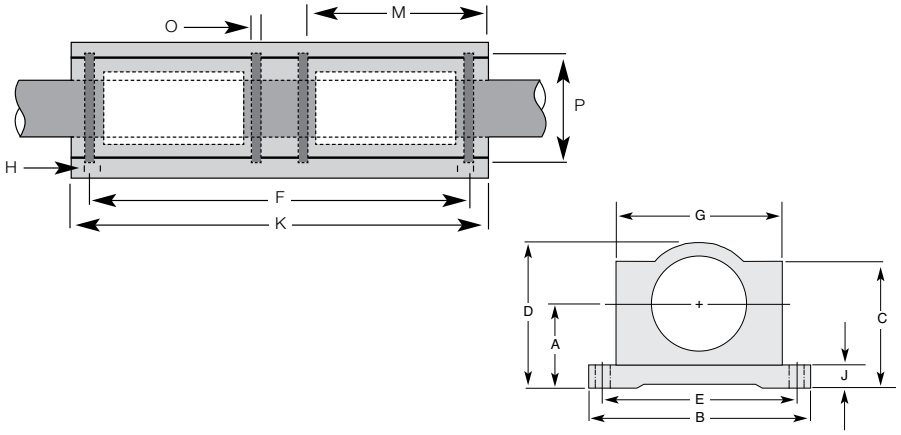

Order key

Type				Options	Size	Style
R	J	U	I	- XX -	04	TW
Closed	iglide® Material	Liner	Inch	-11 = Standard -13 = Self-aligning -31 = Low clearance	Diameter	Twin pillow block

iglide® material options:
iglide® J: All around material
iglide® J200: Best for aluminum shafts
iglide® E7: Best for steel/stainless steel shafts
iglide® T500 (X)*: For high temps up to 356°F (180°C) in aluminum adapter

Dimensions (inch)

Part No.	Nom. Size	A ±.001	B	C	D ±.010	E ±.010	F	G	H BOLT	H HOLE	J	K	M	O	P
RJZI-[ ]-04TW	1/4	0.437	1.625	0.750	0.813	1.312	2.000	1.000	#6	5/32	0.188	2.500	0.750	0.039	0.532
RJUI-[ ]-06TW	3/8	0.500	1.750	0.875	0.938	1.437	2.250	1.125	#6	5/32	0.188	2.750	0.875	0.039	0.665
RJUI-[ ]-08TW	1/2	0.687	2.000	1.125	1.250	1.688	2.500	1.375	#6	5/32	0.250	3.500	1.250	0.046	0.931
RJUI-[ ]-10TW	5/8	0.875	2.500	1.438	1.625	2.125	3.000	1.750	#8	3/16	0.281	4.000	1.500	0.056	1.197
RJUI-[ ]-12TW	3/4	0.937	2.750	1.563	1.750	2.375	3.500	1.875	#8	3/16	0.313	4.500	1.625	0.056	1.330
RJUI-[ ]-16TW	1	1.187	3.250	1.938	2.188	2.875	4.500	2.375	#10	7/32	0.375	6.000	2.250	0.068	1.671
RJUI-[ ]-20TW	1-1/4	1.500	4.000	2.500	2.813	3.500	5.500	3.000	#10	7/32	0.438	7.500	2.625	0.068	2.122
RJUI-[ ]-24TW	1-1/2	1.750	4.750	2.875	3.250	4.125	6.500	3.500	1/4	9/32	0.500	9.000	3.000	0.086	2.519
RJUI-[ ]-32TW	2	2.125	6.000	3.625	4.063	5.250	8.250	4.500	3/8	13/32	0.625	10.000	4.000	0.103	3.182

Supplement the part number with one of the following choices.
Example: RJUI-[13]-04TW for a Self-aligning version

For Standard bearing use [11]
For Self-aligning bearing use [13]
For Low clearance use [31]

Load Data

Part No.	Dynamic Load (lbs) P = 725 psi	Static Load (lbs) P = 5075 psi
RJZI-[ ]-04TW	270	1892
RJUI-[ ]-06TW	236	1656
RJUI-[ ]-08TW	450	3150
RJUI-[ ]-10TW	676	4730
RJUI-[ ]-12TW	878	6154
RJUI-[ ]-16TW	1622	11356
RJUI-[ ]-20TW	2368	16574
RJUI-[ ]-24TW	3244	22716
RJUI-[ ]-32TW	5770	40396

DryLin® R Linear - Product range

Open, twin pillow block - iglide® J liners

- Open, anodized aluminum housing, twin design
- Liner JUIO-01 made of iglide® J is contained according to standard tolerances
- Can be fitted with iglide® T500 liner material for temperatures up to 356°F (180°C)
- Low clearance liners optional
- Dimensionally interchangeable with ball bearings

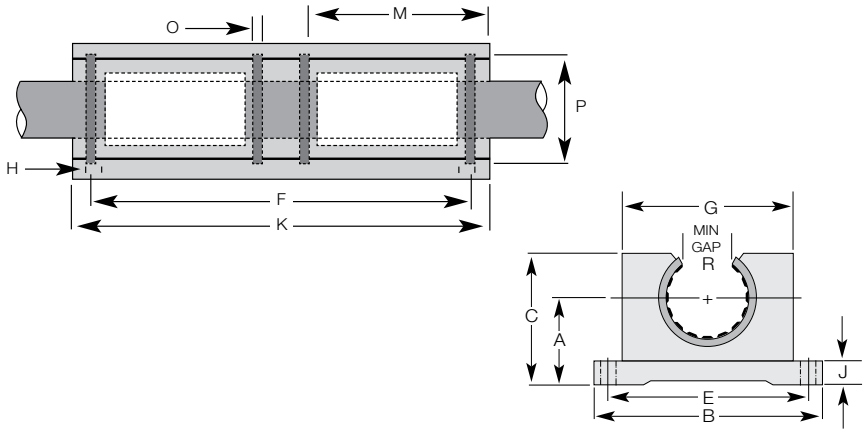

Order key

Type				Options	Size	Style
O	J	U	I	- XX -	08	TW
Closed	iglide® Material	Liner	Inch	-11 = Standard -13 = Self-aligning -31 = Low clearance	Diameter	Twin pillow block

iglide® material options:
iglide® J: All around material
iglide® J200: Best for aluminum shafts
iglide® E7: Best for steel/stainless steel shafts
iglide® T500 (X)*: For high temps up to 356°F (180°C) in aluminum adapter

Dimensions (inch)

Part No.	Nom. Size	A ±.001	B	C	E ±.010	F ±.010	G	H BOLT	H HOLE	J	K	M	O	P	R
OJUI-☐-08TW	1/2	0.687	2.000	1.125	1.688	2.500	1.375	#6	5/32	0.250	3.500	1.250	0.046	0.931	0.313
OJUI-☐-10TW	5/8	0.875	2.500	1.438	2.125	3.000	1.750	#8	3/16	0.281	4.000	1.500	0.056	1.197	0.375
OJUI-☐-12TW	3/4	0.937	2.750	1.563	2.375	3.500	1.875	#8	3/16	0.313	4.500	1.625	0.056	1.330	0.438
OJUI-☐-16TW	1	1.187	3.250	1.938	2.875	4.500	2.375	#10	7/32	0.375	6.000	2.250	0.068	1.671	0.563
OJUI-☐-20TW	1-1/4	1.500	4.000	2.500	3.500	5.500	3.000	#10	7/32	0.438	7.500	2.625	0.068	2.122	0.625
OJUI-☐-24TW	1-1/2	1.750	4.750	2.875	4.125	6.500	3.500	1/4	9/32	0.500	9.000	3.000	0.086	2.519	0.750
OJUI-☐-32TW	2	2.125	6.000	3.625	5.250	8.250	4.500	3/8	13/32	0.625	10.000	4.000	0.103	3.182	1.000

Supplement the part number with one of the following choices.
Example: OJUI-13-04TW for a Self-aligning version

For Standard bearing use 11
For Self-aligning bearing use 13
For Low clearance use 31

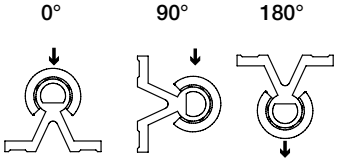

Load Data

Part No.	Dynamic Load (lbs) P = 725 psi			Static Load (lbs) P = 5075 psi		
	0°	90°	180°	0°	90°	180°
OJUI-☐-08TW	452	308	160	3170	2156	1110
OJUI-☐-10TW	680	462	236	4756	3234	1664
OJUI-☐-12TW	816	554	286	5708	3884	1996
OJUI-☐-16TW	1180	800	412	8246	5608	2886
OJUI-☐-20TW	2378	1618	832	16646	11318	5824
OJUI-☐-24TW	3262	2218	1142	22836	15530	7992
OJUI-☐-32TW	5800	3944	2030	40600	27608	14208

DryLin® R Linear - Product range

Square flange pillow block - iglide® J liner

- Flange housing made of anodized aluminum, square flange
- Liner JUI-02 made of iglide® J
- Can be fitted with iglide® T500 liner material for temperatures up to 356°F (180°C)
- Low clearance liners optional

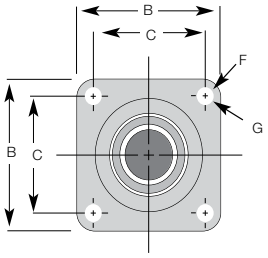

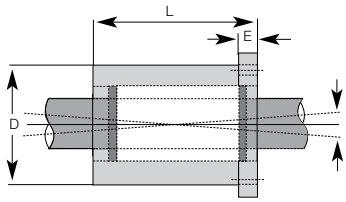

Order key

Type				Options	Size
F	J	U	I	- XX -	08
Flange	iglide® J	Liner	Inch	-11 = Standard -13 = Self-aligning -31 = Low clearance	Diameter

Dimensions (inch)

Part No.	Nominal Size	B	C	D	E	F Bolt Size	G	L
FJUI-☐-08	1/2	1.63	1.25	1.25	.250	#8	.187	1.687
FJUI-☐-12	3/4	2.38	1.75	1.75	.375	#10	.219	2.067
FJUI-☐-16	1	2.75	2.125	2.25	.500	1/4	.281	2.812

Supplement the part number with one of the following choices.
Example: FJUI-13-04 for a Self-aligning version

For Standard bearing use 11
For Self-Aligning bearing use 13
For Low Clearance use 31

DryLin® R Linear - Product range

Square flange, twin pillow block - iglide® J liner

- Flange housing made of anodized aluminum, square flange, twin design
- Liner JUI-02 made of iglide® J
- Can be fitted with iglide® T500 liner material for temperatures up to 356°F (180°C)
- Low clearance liners optional

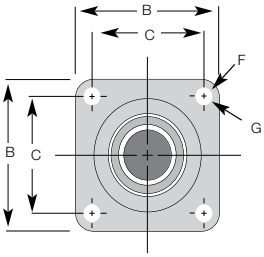

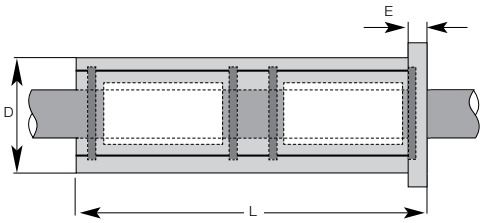

Order key

Type				Options	Size	Style
F	J	U	I	- XX -	08	TW
Flange	iglide® J	Liner	Inch	-11 = Standard -13 = Self-aligning -31 = Low clearance	Diameter	Twin pillow block

Dimensions (inch)

Part No.	Nominal Size	B	C	D	E	F Bolt Size	G	L
FJUI-☐-08TW	1/2	1.63	1.25	1.25	.250	#8	.187	3.375
FJUI-☐-12TW	3/4	2.38	1.75	1.75	.375	#10	.219	4.188
FJUI-☐-16TW	1	2.75	2.125	2.25	.500	1/4	.281	5.625

Supplement the part number with one of the following choices.
Example: FJUI-13-04TW for a Self-aligning version

For Standard bearing use 11
For Self-Aligning bearing use 13
For Low Clearance use 31

Round flange, twin pillow block - iglide® J liner

- Flange housing made of anodized aluminum, round flange
- 2x liner JUI-01 made of iglide® J
- More sizes may be available upon request
- Can be fitted with iglide® T500 liner material for temperatures up to 356°F
- Low clearance liners optional

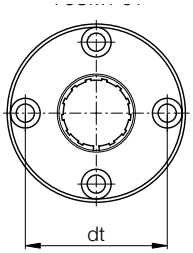

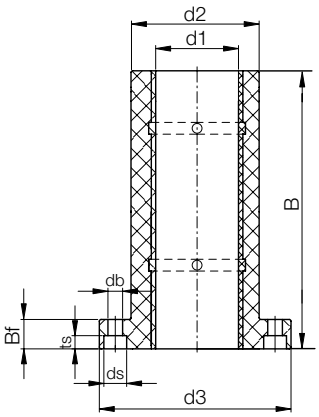

Dimensions (inch)

Part No.	d1	d2 ISO h7	d3	dt	L	Bf	ts	db	ds	Bolt Screw size
FJUIT-01-12	3/4	1.260	2.126	1.693	2.72	.433	.203	.219	.343	#10
FJUIT-01-16	1	1.575	2.441	2.000	3.98	.433	.203	.219	.343	#10

DryLin® R Linear - Product range

Closed, long design - iglide® J, All around material

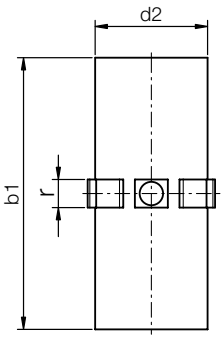

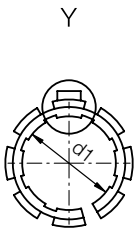

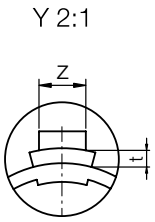

Other iglide® material options:
iglide® J: All around material
iglide® J200: Best for aluminum shafts
iglide® E7: Best for steel/stainless steel shafts
iglide® T500 (X)*: For high temps up to 356°F (180°C) in aluminum adapter, up to 482°F (250°C) in steel housing

Order key

Type				Size
J	U	M	- 01 -	10
iglide® J	Liner	Metric	Standard	d1

Dimensions [mm]

Part No.	d1	d1-Tolerance[78]	d2	b1	r	t	z	Weight [g]
JUM-01-10	10	+0.030 +0.070	12	28	3.0	0.8	2.5	1.10
JUM-01-12	12	+0.030 +0.070	14	31	3.0	0.8	3.0	1.50
JUM-01-16	16	+0.030 +0.070	18	35	3.5	0.8	3.5	2.20
JUM-01-20	20	+0.030 +0.070	23	44	5.0	0.8	3.5	4.90
JUM-01-25	25	+0.030 +0.070	28	57	5.0	0.8	4.0	8.23
JUM-01-30	30	+0.040 +0.085	34	67	5.0	0.8	4.0	14.95
JUM-01-35	35	+0.040 +0.085	39	69	5.0	0.8	4.0	18.20
JUM-01-40	40	+0.040 +0.085	44	79	6.0	1.3	5.0	23.16
JUM-01-50	50	+0.050 +0.100	55	99	7.0	1.3	6.0	45.35
JUM-01-60[79]	60	+0.050 +0.100	65	124	8.0	2.5	6.5	70.00

Installation drawings housing bore for Liner JUM-01
Dimensions [mm]

Part No.	Shaft Ø	di H7	B h10	r +0.05	t +0.1	f +0.5	z +0.2
JUM-01-10	10	12	29	3.0	1.0	1.0	2.6
JUM-01-12	12	14	32	3.0	1.0	1.5	3.1
JUM-01-16	16	18	36	3.5	1.0	1.7	3.6
JUM-01-20	20	23	45	5.0	1.0	2.0	3.6
JUM-01-25	25	28	58	5.0	1.0	2.0	4.1
JUM-01-30	30	34	68	5.0	1.0	2.0	4.1
JUM-01-35	35	39	70	5.0	1.0	2.0	4.1
JUM-01-40	40	44	80	6.0	1.5	2.5	5.1
JUM-01-50	50	55	100	7.0	1.5	2.5	6.1
JUM-01-60[79]	60	65	125	8.0	2.5	3.0	6.5

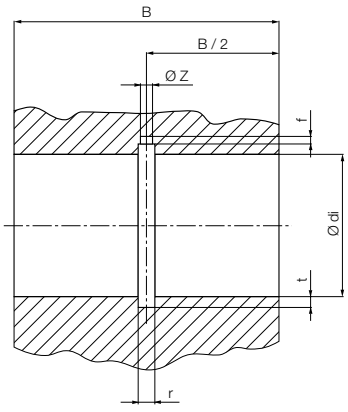

[78] According to igus® testing method ➤ Page 1096
Please note: Installation instructions ➤ Page 1003

Can be combined with:

RJUM-01/-03
TJUM-01/-03

RJUM-06/-06-LL

FJUM-01/-02

DryLin® R Linear - Product range

Open, long design - iglide® J, All around material

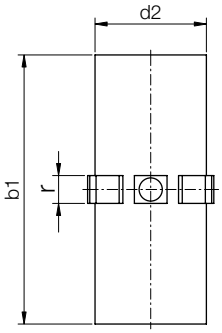

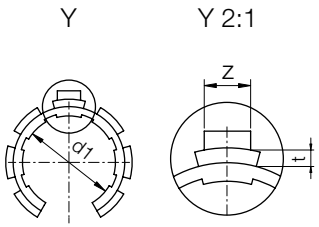

Other iglide® material options:
iglide® J: All around material
iglide® J200: Best for aluminum shafts
iglide® E7: Best for steel/stainless steel shafts
iglide® T500 (X)*: For high temps up to 356°F (180°C) in aluminum adapter, up to 482°F (250°C) in steel housing

Order key

Type					Size
J	U	M	O	- 01 -	10
iglide® J	Liner	Metric	Open	Standard	d1

Dimensions [mm]

Part No.	d1	d1-Tolerance[78)]	d2	b1	r	t	z	Weight [g]
JUMO-01-10	10	+0.030 +0.070	12	28	3.0	0.8	2.5	0.90
JUMO-01-12	12	+0.030 +0.070	14	31	3.0	0.8	3.0	1.16
JUMO-01-16	16	+0.030 +0.070	18	35	3.5	0.8	3.5	1.71
JUMO-01-20	20	+0.030 +0.070	23	44	5.0	0.8	3.5	4.16
JUMO-01-25	25	+0.030 +0.070	28	57	5.0	0.8	4.0	6.97
JUMO-01-30	30	+0.040 +0.085	34	67	5.0	0.8	4.0	12.38
JUMO-01-40	40	+0.040 +0.085	44	79	6.0	1.3	5.0	20.18
JUMO-01-50	50	+0.050 +0.100	55	99	7.0	1.3	6.0	38.60
JUMO-01-60[79)]	60	+0.050 +0.100	65	124	8.0	2.5	6.5	60.10

Installation drawings housing bore for Liner JUMO-01
Dimensions [mm]

Part No.	Shaft Ø	di H7	B h10	W +0.2	r +0.05	t +0.1	f +0.5	z +0.2
JUMO-01-10	10	12	29	7.3	3.0	1.0	1.0	2.6
JUMO-01-12	12	14	32	9.0	3.0	1.0	1.5	3.1
JUMO-01-16	16	18	36	11.6	3.5	1.0	1.7	3.6
JUMO-01-20	20	23	45	12.0	5.0	1.0	2.0	3.6
JUMO-01-25	25	28	58	14.5	5.0	1.0	2.0	4.1
JUMO-01-30	30	34	68	16.6	5.0	1.0	2.0	4.1
JUMO-01-40	40	44	80	21.0	6.0	1.5	2.5	5.1
JUMO-01-50	50	55	100	25.5	7.0	1.5	2.5	6.1
JUMO-01-60[79)]	60	65	125	27.2	8.0	2.5	3.0	6.5

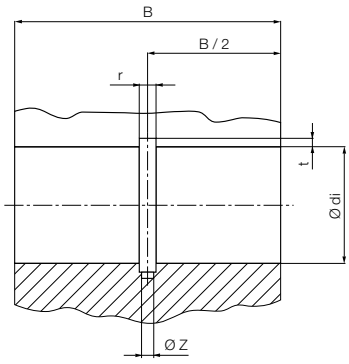

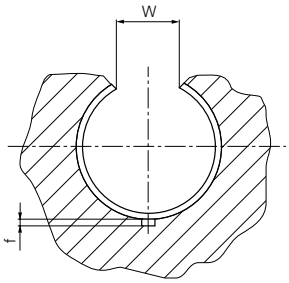

[78)] According to igus® testing method ➤ Page 1096
Please note: Installation instructions ➤ Page 1003

Can be combined with:

OJUM-01/-03

OJUM-06/-06-LL

DryLin® R Linear - Product range

Closed, long design - Low clearance

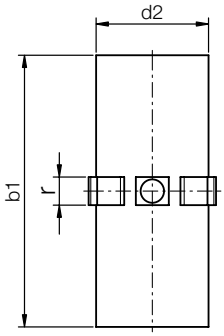

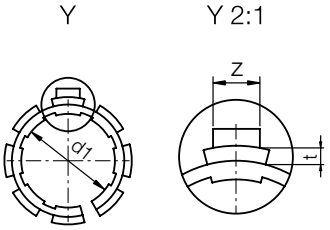

Other iglide® material options:
iglide® J: All around material
iglide® J200: Best for aluminum shafts

Order key

Type				Size
J	U	M	- 20 -	10
iglide® J	Liner	Metric	Low Clearance	d1

Dimensions [mm]

Part No.	d1	d1-Tolerance[78)]	d2	b1	r	t	z	Weight [g]
JUM-20-10	10	+0.000 +0.040	12	28	3.0	0.8	2.5	1.23
JUM-20-12	12	+0.000 +0.040	14	31	3.0	0.8	3.0	1.65
JUM-20-16	16	+0.000 +0.040	18	35	3.5	0.8	3.5	2.42
JUM-20-20	20	+0.000 +0.040	23	44	5.0	0.8	3.5	5.49
JUM-20-25	25	+0.000 +0.040	28	57	5.0	0.8	4.0	8.86
JUM-20-30	30	+0.000 +0.050	34	67	5.0	0.8	4.0	16.63
JUM-20-40	40	+0.000 +0.050	44	79	6.0	1.3	5.0	26.06
JUM-20-50	50	+0.000 +0.060	55	99	7.0	1.3	6.0	48.82

Installation drawings housing bore for Liner JUM-20
Dimensions [mm]

Part No.	Shaft Ø	di H7	B h10	r +0.05	t +0.1	f +0.5	z +0.2
JUM-20-10	10	12	29	3.0	1.0	1.0	2.6
JUM-20-12	12	14	32	3.0	1.0	1.5	3.1
JUM-20-16	16	18	36	3.5	1.0	1.7	3.6
JUM-20-20	20	23	45	5.0	1.0	2.0	3.6
JUM-20-25	25	28	58	5.0	1.0	2.0	4.1
JUM-20-30	30	34	68	5.0	1.0	2.0	4.1
JUM-20-40	40	44	80	6.0	1.5	2.5	5.1
JUM-20-50	50	55	100	7.0	1.5	2.5	6.1

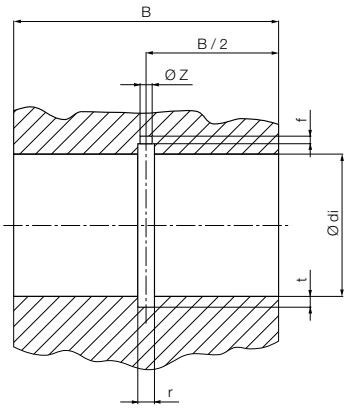

[78)] According to igus® testing method ➤ Page 1096
Please note: Installation instructions ➤ Page 1003

Can be combined with:

RJUM-01/-03
TJUM-01/-03

RJUM-06/-06-LL

FJUM-01/-02

DryLin® R Linear - Product range

Open, long design - Low clearance - for supported shafts

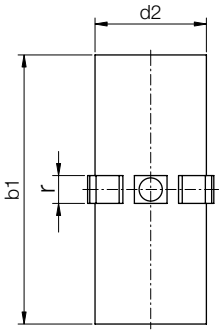

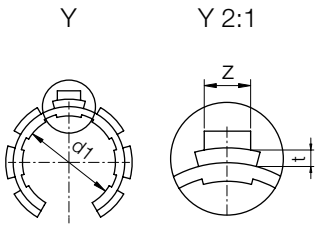

Other iglide® material options:
iglide® J: All around material
iglide® J200: Best for aluminum shafts

Order key

Type					Size
J	U	M	O	- 20 -	10
iglide® J	Liner	Metric	Open	Low clearance	d1

Dimensions [mm]

Part No.	d1	d1-Tolerance[78)]	d2	b1	r	t	z	Weight [g]
JUMO-20-10	10	+0.000 +0.040	12	28	3.0	0.8	2.5	1.10
JUMO-20-12	12	+0.000 +0.040	14	31	3.0	0.8	3.0	1.50
JUMO-20-16	16	+0.000 +0.040	18	35	3.5	0.8	3.5	2.20
JUMO-20-20	20	+0.000 +0.040	23	44	5.0	0.8	3.5	4.90
JUMO-20-25	25	+0.000 +0.040	28	57	5.0	0.8	4.0	8.23
JUMO-20-30	30	+0.000 +0.050	34	67	5.0	0.8	4.0	14.95
JUMO-20-40	40	+0.000 +0.050	44	79	6.0	1.3	5.0	23.16
JUMO-20-50	50	+0.000 +0.060	55	99	7.0	1.3	6.0	45.35

Installation drawings housing bore for Liner JUMO-20
Dimensions [mm]

Part No.	Shaft Ø	di H7	B h10	W +0.2	r +0.05	t +0.1	f +0.5	z +0.2
JUMO-20-10	10	12	29	7.3	3.0	1.0	1.0	2.6
JUMO-20-12	12	14	32	9.0	3.0	1.0	1.5	3.1
JUMO-20-16	16	18	36	11.6	3.5	1.0	1.7	3.6
JUMO-20-20	20	23	45	12.0	5.0	1.0	2.0	3.6
JUMO-20-25	25	28	58	14.5	5.0	1.0	2.0	4.1
JUMO-20-30	30	34	68	16.6	5.0	1.0	2.0	4.1
JUMO-20-40	40	44	80	21.0	6.0	1.5	2.5	5.1
JUMO-20-50	50	55	100	25.5	7.0	1.5	2.5	6.1

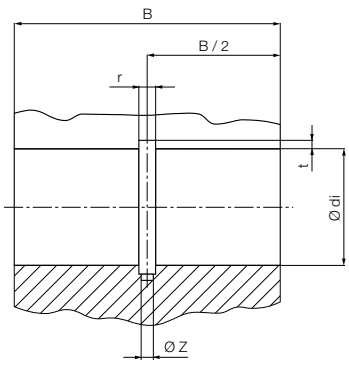

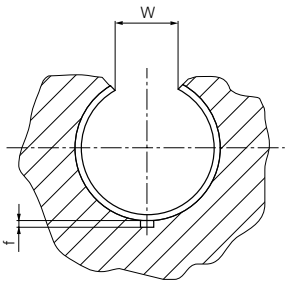

[78)] According to igus® testing method ➤ Page 1096
Please note: Installation instructions ➤ Page 1003

Can be combined with:

OJUM-01/-03

OJUM-06/-06-LL

DryLin® R Linear - Product range

Closed, short design

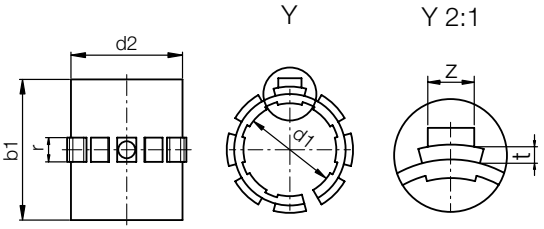

iglide® material options:
iglide® J: All around material
iglide® T500 (X)*: For high temps up to 356°F (180°C) in aluminum adapter, up to 482°F (250°C) in steel housing

Order key

Type				Size
J	U	M	- 02	- 10
iglide® J	Liner	Metric	Standard	d1

Dimensions [mm]

Part No.	d1	d1-Tolerance[78)]	d2	b1	r	t	z	Weight [g]
JUM-02-10	10	+0.030 +0.070	12	25	3.0	0.8	2.5	1.02
JUM-02-12	12	+0.030 +0.070	14	27	3.0	0.8	3.0	1.27
JUM-02-16	16	+0.030 +0.070	18	29	3.5	0.8	3.5	1.82
JUM-02-20	20	+0.030 +0.070	23	29	5.0	0.8	3.5	3.27
JUM-02-25	25	+0.030 +0.070	28	39	5.0	0.8	4.0	5.75
JUM-02-30	30	+0.040 +0.085	34	49	5.0	0.8	4.0	11.28
JUM-02-40	40	+0.040 +0.085	44	59	6.0	1.3	5.0	27.00
JUM-02-45	45	+0.040 +0.085	50	59	7.0	1.3	6.0	27.00
JUM-02-50	50	+0.050 +0.100	55	69	7.0	1.3	6.0	32.56

Installation drawings housing bore for Liner JUM-02
Dimensions [mm]

Part No.	Shaft Ø	di H7	B h10	r +0.05	t +0.1	f +0.5	z +0.2
JUM-02-10	10	12	26	3.0	1.0	1.0	2.6
JUM-02-12	12	14	28	3.0	1.0	1.5	3.1
JUM-02-16	16	18	30	3.5	1.0	1.7	3.6
JUM-02-20	20	23	30	5.0	1.0	2.0	3.6
JUM-02-25	25	28	40	5.0	1.0	2.0	4.1
JUM-02-30	30	34	50	5.0	1.0	2.0	4.1
JUM-02-40	40	44	60	6.0	1.5	2.5	5.1
JUM-02-45	45	50	60	7.0	1.5	2.5	6.1
JUM-02-50	50	55	70	7.0	1.5	2.5	6.1

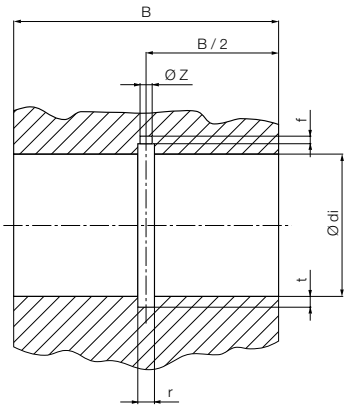

[78)] According to igus® testing method ➤ Page 1096
Please note: Installation instructions ➤ Page 1003

Can be combined with:

RJUM-01/-03
TJUM-01/-03

RJUM-06/-06-LL

FJUM-01/-02

DryLin® R Linear - Product range

Closed, short design - Low clearance

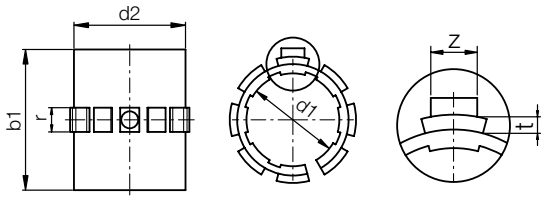

iglide® material options:
iglide® J: All around material

Order key

Type				Size
J	U	M	- 22 -	10
iglide® J	Liner	Metric	Standard	d1

Dimensions [mm]

Part No.	d1	d1-Tolerance[78)]	d2	b1	r	t	z	Weight [g]
JUM-22-10	10	+0.030 +0.070	12	25	3.0	0.8	2.5	1.02
JUM-22-12	12	+0.030 +0.070	14	27	3.0	0.8	3.0	1.27
JUM-22-16	16	+0.030 +0.070	18	29	3.5	0.8	3.5	1.82
JUM-22-20	20	+0.030 +0.070	23	29	5.0	0.8	3.5	3.27
JUM-22-25	25	+0.030 +0.070	28	39	5.0	0.8	4.0	5.75
JUM-22-30	30	+0.040 +0.085	34	49	5.0	0.8	4.0	11.28
JUM-22-40	40	+0.040 +0.085	44	59	6.0	1.3	5.0	27.00
JUM-22-45	45	+0.040 +0.085	50	59	7.0	1.3	6.0	27.00
JUM-22-50	50	+0.050 +0.100	55	69	7.0	1.3	6.0	32.56

Installation drawings housing bore for Liner JUM-22
Dimensions [mm]

Part No.	Shaft Ø	di H7	B h10	r +0.05	t +0.1	f +0.5	z +0.2	z +0.2
JUM-22-10	10	12	26	3.0	1.0	1.0	2.6	2.6
JUM-22-12	12	14	28	3.0	1.0	1.5	3.1	3.1
JUM-22-16	16	18	30	3.5	1.0	1.7	3.6	3.6
JUM-22-20	20	23	30	5.0	1.0	2.0	3.6	3.6
JUM-22-25	25	28	40	5.0	1.0	2.0	4.1	4.1
JUM-22-30	30	34	50	5.0	1.0	2.0	4.1	4.1
JUM-22-40	40	44	60	6.0	1.5	2.5	5.1	5.1
JUM-22-45	45	50	60	7.0	1.5	2.5	6.1	6.1
JUM-22-50	50	55	70	7.0	1.5	2.5	6.1	6.5

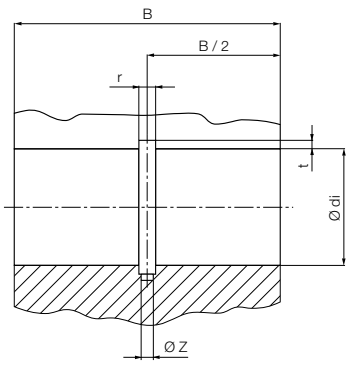

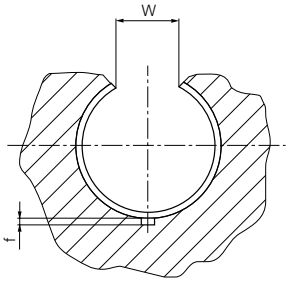

[78)] According to igus® testing method ➤ Page 1096
Please note: Installation instructions ➤ Page 1003

Can be combined with:

RJUM-01/-03
TJUM-01/-03

RJUM-06/-06-LL

FJUM-01/-02

DryLin® R Linear - Product range

Closed, long design - J200, For aluminum shafts

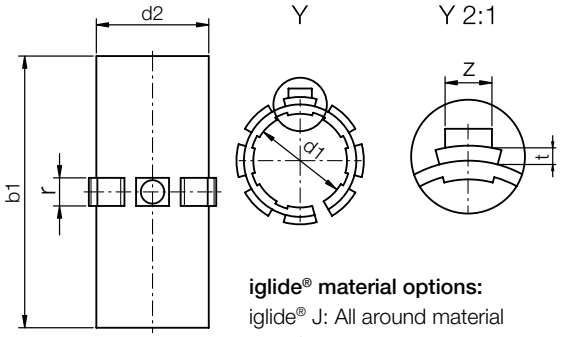

iglide® material options:
iglide® J: All around material
iglide® J200: Best for aluminum shafts
iglide® E7: Best for steel/stainless steel shafts
iglide® T500 (X)*: For high temps up to 356°F (180°C) in aluminum adapter, up to 482°F (250°C) in steel housing

Order key

Type				Size
J200UM	-	01	-	10
iglide® J200		Liner	Metric	Standard	d1

Dimensions [mm]

Part No.	d1	d1-Tolerance[78)]	d2	b1	r	t	z	Weight [g]
J200UM-01-10	10	+0.030 +0.070	12	28	3.0	0.8	2.5	1.10
J200UM-01-12	12	+0.030 +0.070	14	31	3.0	0.8	3.0	1.50
J200UM-01-16	16	+0.030 +0.070	18	35	3.5	0.8	3.5	2.20
J200UM-01-20	20	+0.030 +0.070	23	44	5.0	0.8	3.5	4.90
J200UM-01-25	25	+0.030 +0.070	28	57	5.0	0.8	4.0	8.23
J200UM-01-30	30	+0.040 +0.085	34	67	5.0	0.8	4.0	14.95
J200UM-01-35	35	+0.040 +0.085	39	69	5.0	0.8	4.0	18.20
J200UM-01-40	40	+0.040 +0.085	44	79	6.0	1.3	5.0	23.16
J200UM-01-50	50	+0.050 +0.100	55	99	7.0	1.3	6.0	45.35
J200UM-01-60[79)]	60	+0.050 +0.100	65	124	8.0	2.5	6.5	70.00

Installation drawings housing bore for Liner J200UM-01
Dimensions [mm]

Part No.	Shaft Ø	di H7	B h10	r +0.05	t +0.1	f +0.5	z +0.2
J200UM-01-10	10	12	29	3.0	1.0	1.0	2.6
J200UM-01-12	12	14	32	3.0	1.0	1.5	3.1
J200UM-01-16	16	18	36	3.5	1.0	1.7	3.6
J200UM-01-20	20	23	45	5.0	1.0	2.0	3.6
J200UM-01-25	25	28	58	5.0	1.0	2.0	4.1
J200UM-01-30	30	34	68	5.0	1.0	2.0	4.1
J200UM-01-35	35	39	70	5.0	1.0	2.0	4.1
J200UM-01-40	40	44	80	6.0	1.5	2.5	5.1
J200UM-01-50	50	55	100	7.0	1.5	2.5	6.1
J200UM-01-60[79)]	60	65	125	8.0	2.5	3.0	6.5

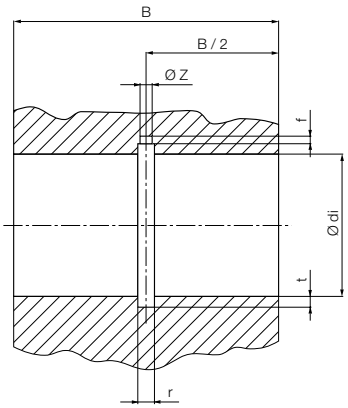

[78)] According to igus® testing method ➤ Page 1096
Please note: Installation instructions ➤ Page 1003

Can be combined with:

RJUM-01/-03
TJUM-01/-03

RJUM-06/-06-LL

FJUM-01/-02

DryLin® R Linear - Product range

Open, long design - J200, For aluminum shafts

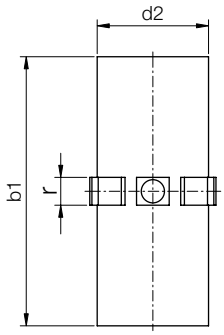

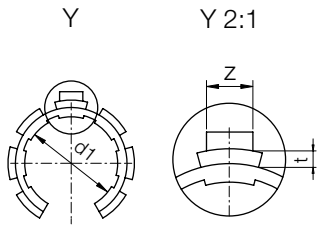

iglide® material options:
iglide® J: All around material
iglide® J200: Best for aluminum shafts
iglide® E7: Best for steel/stainless steel shafts
iglide® T500 (X)*: For high temps up to 356°F (180°C) in aluminum adapter, up to 482°F (250°C) in steel housing

Order key

Type					Size
J200	UMO	-	01	-10	
iglide® J200	Liner	Metric	Open	Standard	d1

Dimensions [mm]

Part No.	d1	d1-Tolerance[78]	d2	b1	r	t	z	Weight [g]
J200UMO-01-10	10	+0.030 +0.070	12	28	3.0	0.8	2.5	0.90
J200UMO-01-12	12	+0.030 +0.070	14	31	3.0	0.8	3.0	1.16
J200UMO-01-16	16	+0.030 +0.070	18	35	3.5	0.8	3.5	1.71
J200UMO-01-20	20	+0.030 +0.070	23	44	5.0	0.8	3.5	4.16
J200UMO-01-25	25	+0.030 +0.070	28	57	5.0	0.8	4.0	6.97
J200UMO-01-30	30	+0.040 +0.085	34	67	5.0	0.8	4.0	12.38
J200UMO-01-40	40	+0.040 +0.085	44	79	6.0	1.3	5.0	20.18
J200UMO-01-50	50	+0.050 +0.100	55	99	7.0	1.3	6.0	38.60
J200UMO-01-60[79]	60	+0.050 +0.100	65	124	8.0	2.5	6.5	60.10

Installation drawings housing bore for Liner J200UMO-01
Dimensions [mm]

Part No.	Shaft Ø	di H7	B h10	W +0.2	r +0.05	t +0.1	f +0.5	z +0.2
J200UMO-01-10	10	12	29	7.3	3.0	1.0	1.0	2.6
J200UMO-01-12	12	14	32	9.0	3.0	1.0	1.5	3.1
J200UMO-01-16	16	18	36	11.6	3.5	1.0	1.7	3.6
J200UMO-01-20	20	23	45	12.0	5.0	1.0	2.0	3.6
J200UMO-01-25	25	28	58	14.5	5.0	1.0	2.0	4.1
J200UMO-01-30	30	34	68	16.6	5.0	1.0	2.0	4.1
J200UMO-01-40	40	44	80	21.0	6.0	1.5	2.5	5.1
J200UMO-01-50	50	55	100	25.5	7.0	1.5	2.5	6.1
J200UMO-01-60[79]	60	65	125	27.2	8.0	2.5	3.0	6.5

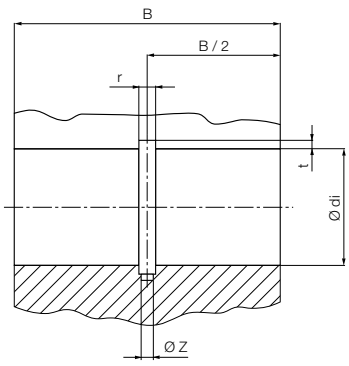

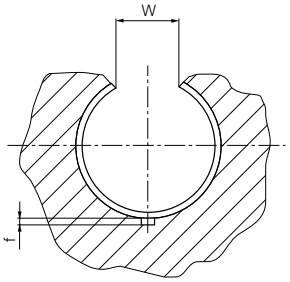

[78] According to igus® testing method ➤ Page 1096
Please note: Installation instructions ➤ Page 1003

Can be combined with:

OJUM-01/-03

OJUM-06/-06-LL

DryLin® R Linear - Product range

Closed, long design
For steel, chrome plated steel, stainless steel

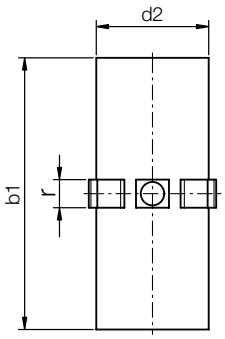

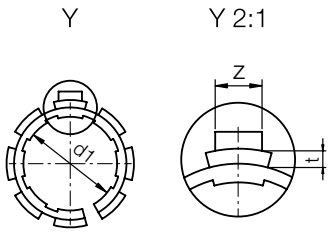

iglide® material options:
iglide® J: All around material
iglide® J200: Best for aluminum shafts
iglide® E7: Best for steel/stainless steel shafts
iglide® T500 (X)*: For high temps up to 356°F (180°C) in aluminum adapter, up to 482°F (250°C) in steel housing

Order key

Type				Size
E7	U	M	- 01	- 10
iglide® E7	Liner	Metric	Standard	d1

Dimensions [mm]

Part No.	d1	d1-Tolerance[78)]	d2	b1	r	t	z	Weight [g]
E7UM-01-10	10	+0.030 +0.070	12	28	3.0	0.8	2.5	0.73
E7UM-01-12	12	+0.030 +0.070	14	31	3.0	0.8	3.0	1.01
E7UM-01-16	16	+0.030 +0.070	18	35	3.5	0.8	3.5	1.45
E7UM-01-20	20	+0.030 +0.070	23	44	5.0	0.8	3.5	3.25
E7UM-01-25	25	+0.030 +0.070	28	57	5.0	0.8	4.0	5.44
E7UM-01-30	30	+0.040 +0.085	34	67	5.0	0.8	4.0	9.88
E7UM-01-40	40	+0.040 +0.085	44	79	6.0	1.3	5.0	17.3
E7UM-01-50	50	+0.050 +0.100	55	99	7.0	1.3	6.0	–
E7UM-01-60[79)]	60	+0.050 +0.100	65	124	8.0	2.5	6.5	–

Installation drawings housing bore for Liner E7UM-01
Dimensions [mm]

Part No.	Shaft Ø	di H7	B h10	r +0.05	t +0.1	f +0.5	z +0.2
E7UM-01-10	10	12	29	3.0	1.0	1.0	2.6
E7UM-01-12	12	14	32	3.0	1.0	1.5	3.1
E7UM-01-16	16	18	36	3.5	1.0	1.7	3.6
E7UM-01-20	20	23	45	5.0	1.0	2.0	3.6
E7UM-01-25	25	28	58	5.0	1.0	2.0	4.1
E7UM-01-30	30	34	68	5.0	1.0	2.0	4.1
E7UM-01-40	40	44	80	6.0	1.5	2.5	5.1
E7UM-01-50	50	55	100	7.0	1.5	2.5	6.1
E7UM-01-60[79)]	60	65	125	8.0	2.5	3.0	6.5

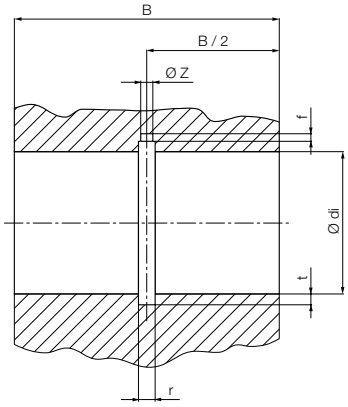

[78)] According to igus® testing method ➤ Page 1096
Please note: Installation instructions ➤ Page 1003

Can be combined with:

RJUM-01/-03
TJUM-01/-03

RJUM-06/-06-LL

FJUM-01/-02

DryLin® R Linear - Product range

Open, long design
For steel, chrome plated steel, stainless steel

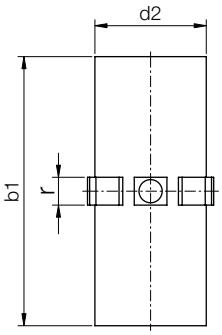

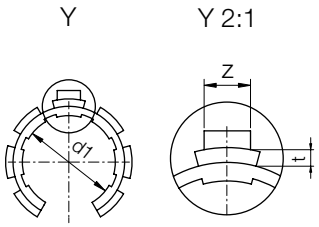

iglide® material options:
iglide® J: All around material
iglide® J200: Best for aluminum shafts
iglide® E7: Best for steel/stainless steel shafts
iglide® T500 (X)*: For high temps up to 356°F (180°C) in aluminum adapter, up to 482°F (250°C) in steel housing

Order key

Type					Size
E7	U	M	O	- 01 -	10
iglide® E7	Liner	Metric	Open	Standard	d1

Dimensions [mm]

Part No.	d1	d1-Tolerance[78)]	d2	b1	r	t	z	Weight [g]
E7UMO-01-10	10	+0.030 +0.070	12	28	3.0	0.8	2.5	0.90
E7UMO-01-12	12	+0.030 +0.070	14	31	3.0	0.8	3.0	1.16
E7UMO-01-16	16	+0.030 +0.070	18	35	3.5	0.8	3.5	1.71
E7UMO-01-20	20	+0.030 +0.070	23	44	5.0	0.8	3.5	4.16
E7UMO-01-25	25	+0.030 +0.070	28	57	5.0	0.8	4.0	6.97
E7UMO-01-30	30	+0.040 +0.085	34	67	5.0	0.8	4.0	12.38
E7UMO-01-40	40	+0.040 +0.085	44	79	6.0	1.3	5.0	20.18
E7UMO-01-50	50	+0.050 +0.100	55	99	7.0	1.3	6.0	38.60
E7UMO-01-60[79)]	60	+0.050 +0.100	65	124	8.0	2.5	6.5	60.10

Installation drawings housing bore for Liner E7UMO-01
Dimensions [mm]

Part No.	Shaft Ø	di H7	B h10	W +0.2	r +0.05	t +0.1	f +0.5	z +0.2
E7UMO-01-10	10	12	29	7.3	3.0	1.0	1.0	2.6
E7UMO-01-12	12	14	32	9.0	3.0	1.0	1.5	3.1
E7UMO-01-16	16	18	36	11.6	3.5	1.0	1.7	3.6
E7UMO-01-20	20	23	45	12.0	5.0	1.0	2.0	3.6
E7UMO-01-25	25	28	58	14.5	5.0	1.0	2.0	4.1
E7UMO-01-30	30	34	68	16.6	5.0	1.0	2.0	4.1
E7UMO-01-40	40	44	80	21.0	6.0	1.5	2.5	5.1
E7UMO-01-50	50	55	100	25.5	7.0	1.5	2.5	6.1
E7UMO-01-60[79)]	60	65	125	27.2	8.0	2.5	3.0	6.5

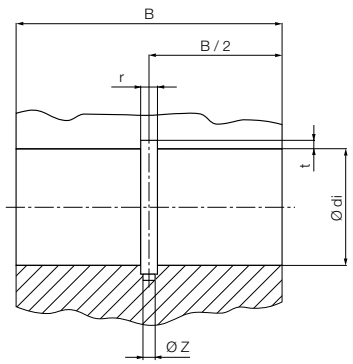

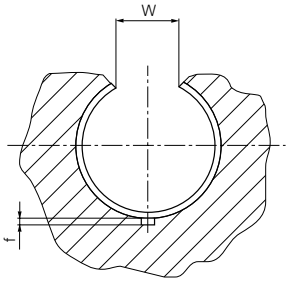

[78)] According to igus® testing method ➤ Page 1096
Please note: Installation instructions ➤ Page 1003

Can be combined with:

OJUM-01/-03

OJUM-06/-06-LL

DryLin® R Linear - Product range

Closed, long design - High temperature 482°F (250°C)

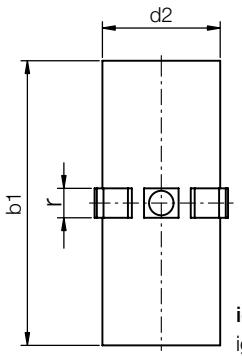

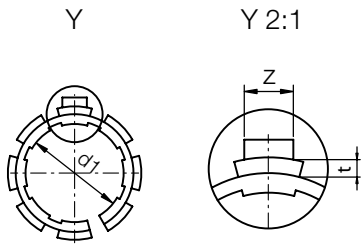

iglide® material options:
iglide® J: All around material
iglide® J200: Best for aluminum shafts
iglide® E7: Best for steel/stainless steel shafts
iglide® T500 (X)*: For high temps up to 356°F (180°C) in aluminum adapter, up to 482°F (250°C) in steel housing

Order key

Type				Size
T	U	M	- 01	- 10
iglide® T500 (X)*	Liner	Metric	Standard	d1

Dimensions [mm]

Part No.	d1	d1-Tolerance[78]	d2	b1	r	t	z	Weight [g]
TUM-01-12	12	+0.030 +0.070	14	31	3.0	0.8	3.0	1.46
TUM-01-14	14	+0.030 +0.070	16	30	3.5	0.6	3.5	1.81
TUM-01-16	16	+0.030 +0.070	18	35	3.5	0.8	3.5	2.13
TUM-01-20	20	+0.030 +0.070	23	44	5.0	0.8	3.5	4.7
TUM-01-25	25	+0.030 +0.070	28	57	5.0	0.8	4.0	8.27
TUM-01-30	30	+0.040 +0.085	34	67	5.0	0.8	4.0	15.57
TUM-01-40	40	+0.040 +0.085	44	79	6.0	1.3	5.0	24.0

Installation drawings housing bore for Liner TUM-01
Dimensions [mm]

Part No.	Shaft Ø	di H7	B h10	r +0.05	t +0.1	f +0.5	z +0.2
TUM-01-12	12	14	32	3.0	1.0	1.5	3.1
TUM-01-14	14	16	31	3.5	0.8	1.7	3.6
TUM-01-16	16	18	36	3.5	1.0	1.7	3.6
TUM-01-20	20	23	45	5.0	1.0	2.0	3.6
TUM-01-25	25	28	58	5.0	1.0	2.0	4.1
TUM-01-30	30	34	68	5.0	1.0	2.0	4.1
TUM-01-40	40	44	80	6.0	1.5	2.5	5.1

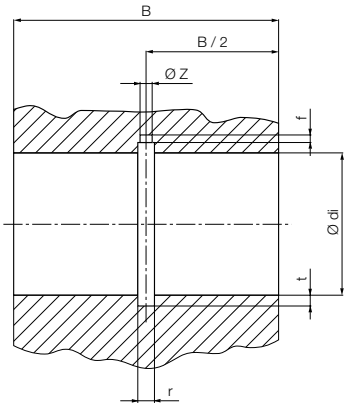

*European part numbers for the high temperature liner begin with X. Example XUM-...

[78] According to igus® testing method ➤ Page 1096
Please note: Installation instructions ➤ Page 1003

Can be combined with:

RJUM-01/-03
TJUM-01/-03

RJUM-06/-06-LL

FJUM-01/-02

DryLin® R Linear - Product range

Open, long design, high temperature – for supported shafts 482°F (250°C)

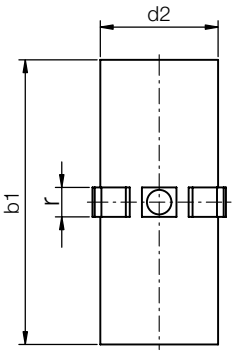

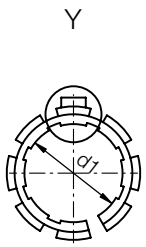

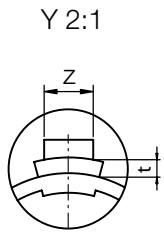

- Temperatures from -158 to +482°F (–100 to +250°C)
- Recommended in combination with stainless steel or chrome-plated shafts
- 2-parts, for supported shafts

iglide® material options:
iglide® J: All around material
iglide® J200: Best for aluminum shafts
iglide® E7: Best for steel/stainless steel shafts
iglide® T500 (X)*: For high temps up to 356°F (180°C) in aluminum adapter, up to 482°F (250°C) in steel housing

Order key

Type					Size
T	U	M	O	- 01 -	10
iglide® T500 (X)*	Liner	Metric	Open	Standard	d1

Dimensions [mm]

Part No.	d1	d1-Tolerance[78]	d2	b1	r	t	z	Weight [g]
TUMO-01-10[110]	10	+0.000 +0.020	12	28	3.0	0.8	2.5	1.0
TUMO-01-12	12	+0.030 +0.070	14	31	3.0	0.8	3.0	1.46
TUMO-01-16	16	+0.030 +0.070	18	35	3.5	0.8	3.5	2.13
TUMO-01-20	20	+0.030 +0.070	23	44	5.0	0.8	3.5	4.7
TUMO-01-25	25	+0.030 +0.070	28	57	5.0	0.8	4.0	8.27
TUMO-01-30	30	+0.040 +0.085	34	67	5.0	0.8	4.0	15.57
TUMO-01-40	40	+0.040 +0.085	44	79	6.0	1.3	5.0	24.0

Installation drawings housing bore for TUMO-01 | dimensions [mm]

Part No.	Shaft Ø	di H7	B h10	W +0.2	r +0.05	t +0.1	f +0.5	z +0.2
TUMO-01-10[110]	10	12	29	7.3	3.0	1.0	1.0	2.6
TUMO-01-12	12	14	32	9.0	3.0	1.0	1.5	3.1
TUMO-01-16	16	18	36	11.6	3.5	1.0	1.7	3.6
TUMO-01-20	20	23	45	12.0	5.0	1.0	2.0	3.6
TUMO-01-25	25	28	58	14.5	5.0	1.0	2.0	4.1
TUMO-01-30	30	34	68	16.6	5.0	1.0	2.0	4.1
TUMO-01-40	40	44	80	21.0	6.0	1.5	2.5	5.1

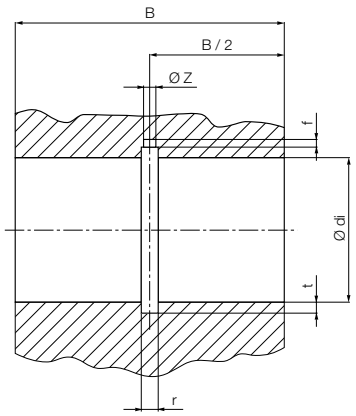

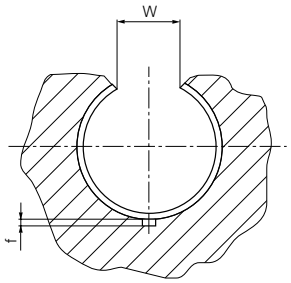

[110] one part

*European part numbers for the high temperature liner begin with X. Example XUMO-...

[78] According to igus® testing method ➤ Page 1096
Please note: Installation instructions ➤ Page 1003

Can be combined with:

OJUM-01/-03
TJUM-01/-03

OJUM-06/-06-LL

DryLin® R Linear - Product range

Closed, short design - High temperature

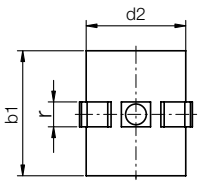

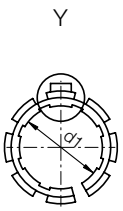

Other iglide® material options:
iglide® J: All around material
iglide® T500 (X)*: For high temps up to 356°F (180°C) in aluminum adapter, up to 482°F (250°C) in steel housing

Order key

Type				Size
T	U	M	- 02	- 10
iglide® T500 (X)*	Liner	Metric	Compact	d1

Dimensions [mm]

Part No.	d1	d1-Tolerance[78)]	d2	b1	r	t	z	Weight [g]
TUM-02-12	12	+0.030 +0.070	14	27	3.0	0.8	3.0	1.46
TUM-02-16	16	+0.030 +0.070	18	29	3.5	0.8	3.5	2.13
TUM-02-20	20	+0.030 +0.070	23	29	5.0	0.8	3.5	4.7
TUM-02-25	25	+0.030 +0.070	28	39	5.0	0.8	4.0	8.27
TUM-02-30	30	+0.040 +0.085	34	49	5.0	0.8	4.0	15.57
TUM-02-40	40	+0.040 +0.085	44	59	6.0	1.3	5.0	24.0
TUM-01-40	40	+0.040 +0.085	44	79	6.0	1.3	5.0	24.0

Installation drawings housing bore for Liner TUM-02
Dimensions [mm]

Part No.	Shaft Ø	di H7	B h10	r +0.05	t +0.1	f +0.5	z +0.2
TUM-02-12	12	14	28	3.0	1.0	1.5	3.1
TUM-02-16	16	18	30	3.5	1.0	1.7	3.6
TUM-02-20	20	23	30	5.0	1.0	2.0	3.6
TUM-02-25	25	28	40	5.0	1.0	2.0	4.1
TUM-02-30	30	34	50	5.0	1.0	2.0	4.1
TUM-02-40	40	44	60	6.0	1.5	2.5	5.1
TUM-01-40	40	44	80	6.0	1.5	2.5	5.1

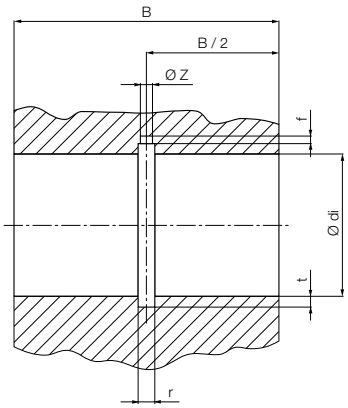

*European part numbers for the high temperature liner begin with X. Example XUM-...

[78)] According to igus® testing method ➤ Page 1096
Please note: Installation instructions ➤ Page 1003

Can be combined with:

RJUM-02

RJUM-05/RJUME-05
TJUM-05/RJUMT-05

FJUMT-01/-02

DryLin® R Linear - Product range

DryLin® slide discs (RSDJ-round slide disc)

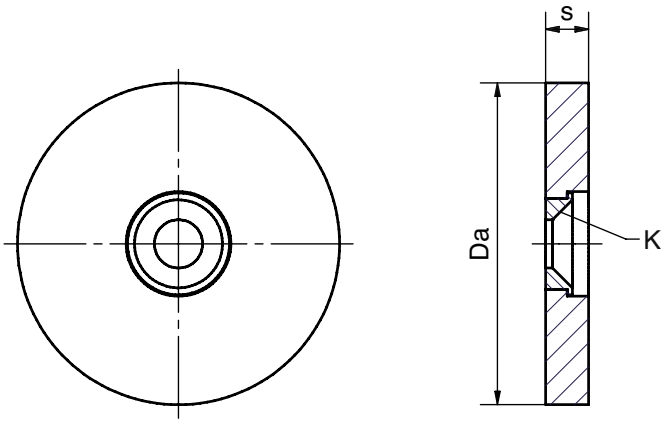

The DryLin® – slide disks from stock made from high performance iglide® J have very universal applications. Without external lubricants, heavy loads can be moved over a variety of surfaces (steel, aluminum, stainless steel, etc.) with very low friction. The plates are mounted by a screw through the bras reinforced bore in the center.

Order key

Type	Size		
RSD J	- 40	- 06	
Slide disc	iglide® J	Outer-Ø	Width

Material:
iglide® J ➤ Page 115

Dimensions [mm]

Part No.	Outer-Ø	Wear limit	With	For countersunk screw	Max. stat. load
	Da		s	K	[N]
RSDJ-40-06	40	1.5	6 ± 0.05	M6	28,500
RSDJ-60-08	60	2.5	8 ± 0.05	M8	66,000
RSDJ-80-08	80	2.5	8 ± 0.05	M8	120,000

DryLin® R Linear - Product range

Standard type made of iglide® J/pressfit

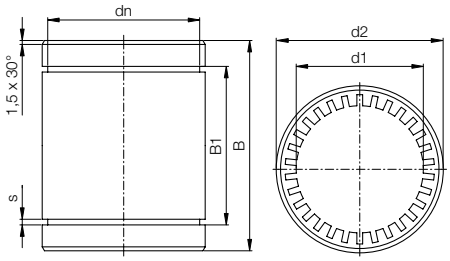

- Dimension equivalent to the standard for recirculating ball bearings
- Assembly by pressfitting **in an H7 housing**
  ➤ Press-in forces: see table
- Part oversized prior to pressfit

Order key

Type				Size
R	J	M	- 01	- 10
Closed	iglide® J	Metric	Standard	Diameter

Technical Data

Part No.	d1-Tolerance[78] after pressfit E9 [mm]	Fmax. dyn.[82] P = 2.5 MPa [N]	Fmax. stat[82] P = 17.5 MPa [N]	Weight [g]	Pressfit force[83] [N]
RJM-01-08	+0.025 +0.061	250	1,750	4	400
RJM-01-10	+0.032 +0.075	363	2,538	7	700
RJM-01-12	+0.032 +0.075	480	3,360	9	1,300
RJM-01-16	+0.032 +0.075	720	5,040	13	1,100
RJM-01-20	+0.040 +0.092	1,125	7,875	24	1,500
RJM-01-25	+0.040 +0.092	1,813	12,688	47	3,500
RJM-01-30	+0.040 +0.092	2,550	17,850	72	4,500
RJM-01-40	+0.050 +0.112	4,000	28,000	127	4,200

Dimensions [mm]

Part No.	d1	d2	B	B1	s	dn
RJM-01-08	8	16	25	16.2	1.10	15.2
RJM-01-10	10	19	29	21.6	1.30	17.5
RJM-01-12	12	22	32	22.6	1.30	20.5
RJM-01-16	16	26	36	24.6	1.30	24.2
RJM-01-20	20	32	45	31.2	1.60	29.6
RJM-01-25	25	40	58	43.7	1.85	36.5
RJM-01-30	30	47	68	51.7	1.85	43.5
RJM-01-40	40	62	80	60.3	2.15	57.8

[78] According to igus® testing method ➤ Page 1096
[82] Design standards ➤ Page 1001
[83] Applies to room temperature pressfit decreases with time depending on the temperature
Please note: Installation instructions ➤ Page 1003

Can be combined with:

RQA-04

RTA-04

RGAS-04

RGA-04

DryLin® R Linear - Product range

Standard type made of iglide® J - Low clearance/precision

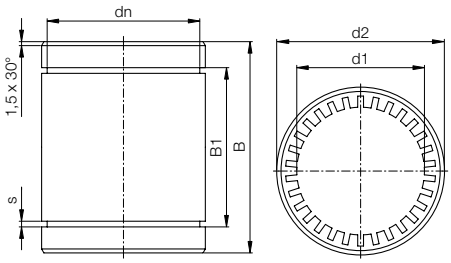

- Easy assembly by slip-fit
- Reduced bearing clearance
- Temperature range -4°F to +140°F (-20 °C to +60 °C)
- Secured by retaining clips (DIN 471/472)

Order key

Type						Size
R	J	M	P	-	01	10
Closed	iglide® J	Metric	Low clearance		Standard	Diameter

Technical Data

Part No.	d1-Tolerance[78)]	Fmax. dyn.[82)] P = 2.5 MPa	Fmax. stat.[82)] P = 2.5 MPa	Weight
	[mm]	[N]	[N]	[g]
RJMP-01-06	+0.000 +0.030	200	1,400	2
RJMP-01-08	+0.000 +0.040	250	1,750	4
RJMP-01-10	+0.000 +0.040	363	2,538	7
RJMP-01-12	+0.000 +0.040	480	3,360	9
RJMP-01-16	+0.000 +0.040	720	5,040	13
RJMP-01-20	+0.000 +0.040	1,125	7,875	24
RJMP-01-25	+0.000 +0.050	1,813	12,688	47
RJMP-01-30	+0.000 +0.050	2,550	17,850	72

Dimensions [mm]

Part No.	d1	d2	B	B1	s	dn
RJMP-01-06	6	12	19	13.5	1.10	11.5
RJMP-01-08	8	16	25	16.2	1.10	15.2
RJMP-01-10	10	19	29	21.6	1.30	17.5
RJMP-01-12	12	22	32	22.6	1.30	20.5
RJMP-01-16	16	26	36	24.6	1.30	24.2
RJMP-01-20	20	32	45	31.2	1.60	29.6
RJMP-01-25	25	40	58	43.7	1.85	36.5
RJMP-01-30	30	47	68	51.7	1.85	43.5

[78)] According to igus® testing method ➤ Page 1096
[82)] Design standards ➤ Page 1001
Please note: Installation instructions ➤ Page 1003

Can be combined with:

RQA-04

RTA-04

RGAS-04

RGA-04

DryLin® R Linear - Product range

Closed, anodized aluminum adapter

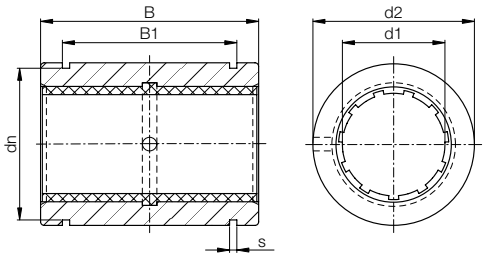

- Anodized aluminum adapter
- Dimensionally interchangeable with linear ball bearings
- Equipped with liner made of iglide® J
  Temperature range -40°F to +194°F (-40°C to +90°C)
  JUM-01 (standard)
- Secured by retaining clips according to DIN 471 or 472 (not included in delivery)
- Recommended housing bore H7

Order key

Type					Size
R	J	U	M	-	01-10
Closed	iglide® Material	Liner	Inch	Standard	Diameter

iglide® material options:
iglide® J: All around material
iglide® J200: Best for aluminum shafts
iglide® E7: Best for steel/stainless steel shafts
iglide® T500 (X)*: For high temps up to 356°F (180°C) in aluminum adapter

Dimensions [mm]

Part No.	d1	d1-Tolerance[78]	d2	B	B1	s	dn	Housing Bore Recommendations	
			h7	h10	H10	H10	h10	Min.	Max.
RJZM-01-05[81]	5	+0.025 +0.060	12	22	14.2	1.10	11.5	12.000	12.018
RJZM-01-06[81]	6	+0.025 +0.060	12	22	14.2	1.10	11.5	12.000	12.018
RJZM-01-08[81]	8	+0.032 +0.070	16	25	16.2	1.10	15.2	16.000	16.018
RJUM-01-10	10	+0.030 +0.088	19	29	21.6	1.30	17.5	19.000	19.021
RJUM-01-12	12	+0.030 +0.088	22	32	22.6	1.30	20.5	22.000	22.021
RJUM-01-16	16	+0.030 +0.088	26	36	24.6	1.30	24.2	26.000	26.021
RJUM-01-20	20	+0.030 +0.091	32	45	31.2	1.60	29.6	32.000	32.025
RJUM-01-25	25	+0.030 +0.091	40	58	43.7	1.85	36.5	40.000	40.025
RJUM-01-30	30	+0.040 +0.110	47	68	51.7	1.85	43.5	47.000	47.025
RJUM-01-40	40	+0.040 +0.115	62	80	60.3	2.15	57.8	62.000	62.030
RJUM-01-50	50	+0.050 +0.130	75	100	77.3	2.65	70.5	75.000	75.030
RJUM-01-60	60	+0.050 +0.140	90	125	101.7	3.15	86.5		

Load Data

Part No.	F max, dynamic p = 5 MPa (N)	F max, static p = 35 MPa (N)
RJZM-01-05[81]	525	3,675
RJZM-01-06[81]	525	3,675
RJZM-01-08[81]	960	6,720
RJUM-01-10	725	5,075
RJUM-01-12	960	6,720
RJUM-01-16	1,440	10,080
RJUM-01-20	2,250	15,750
RJUM-01-25	3,625	25,375
RJUM-01-30	5,100	35,700
RJUM-01-40	8,000	56,000
RJUM-01-50	9,000	87,500
RJUM-01-60	12,000	120,000

[78] According to igus® testing method ➤ Page 1096
[81] Ø < 10 mm use iglide® JSM sleeve bearings
[82] Design standards ➤ Page 1001
Please note: Installation instructions ➤ Page 1003

Also available with liners:

J200UM-01

E7UM-01

TUM-01

DryLin® R Linear - Product range

Closed, anodized aluminum adapter - Low clearance

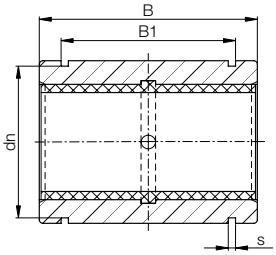

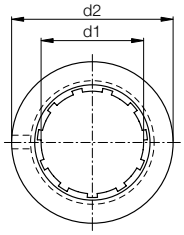

- Anodized aluminum adapter
- Dimensionally interchangeable with linear ball bearings
- Equipped with liner made of iglide® J
  Temperature range -40°F to +194°F (-40°C to +90°C)
  JUM-20 (standard)
- Secured by retaining clips according to DIN 471 or 472 (not included in delivery)
- Recommended housing bore H7

Order key

Type						Size	
R	J	U	M	-	21	-	10
Closed		iglide® Material	Liner	Inch		Low clearance	Diameter

iglide® material options:
iglide® J: All around material
iglide® J200: Best for aluminum shafts
iglide® E7: Best for steel/stainless steel shafts
iglide® T500 (X)*: For high temps up to 356°F (180°C) in aluminum adapter

Dimensions [mm]

Part No.	d1	d1-Tolerance[78)]	d2	B	B1	s	dn	Housing Bore Recommendations	
			h7	h10	H10	H10	h10	Min.	Max.
RJUM-21-10	10	+0.000 +0.058	19	29	21.6	1.30	17.5	19.000	19.021
RJUM-21-12	12	+0.000 +0.058	22	32	22.6	1.30	20.5	22.000	22.021
RJUM-21-16	16	+0.000 +0.058	26	36	24.6	1.30	24.2	26.000	26.021
RJUM-21-20	20	+0.000 +0.061	32	45	31.2	1.60	29.6	32.000	32.025
RJUM-21-25	25	+0.000 +0.061	40	58	43.7	1.85	36.5	40.000	40.025
RJUM-21-30	30	+0.000 +0.075	47	68	51.7	1.85	43.5	47.000	47.025
RJUM-21-40	40	+0.000 +0.080	62	80	60.3	2.15	57.8	62.000	62.030
RJUM-21-50	50	+0.000 +0.090	75	100	77.3	2.65	70.5	75.000	75.030

Load Data

Part No.	F max, dynamic p = 5 MPa (N)	F max, static p = 35 MPa (N)
RJUM-21-10	725	5,075
RJUM-21-12	960	6,720
RJUM-21-16	1,440	10,080
RJUM-21-20	2,250	15,750
RJUM-21-25	3,625	25,375
RJUM-21-30	5,100	35,700
RJUM-21-40	8,000	56,000
RJUM-21-50	12,500	87,500

[78)] According to igus® testing method ➤ Page 1096
[82)] Design standards ➤ Page 1001
Please note: Installation instructions ➤ Page 1003

Also available with liners:

J200UM-01

E7UM-01

TUM-01

DryLin® R Linear - Product range

Closed, anodized aluminum adapter - Self-aligning - iglide® J liner

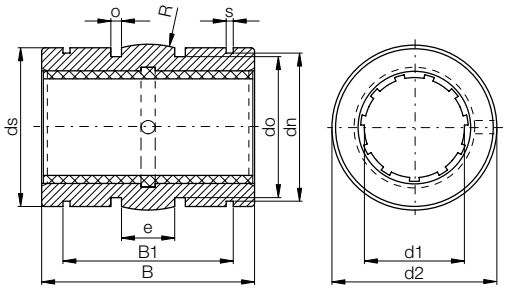

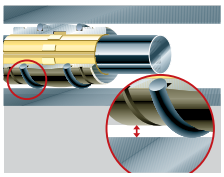

- With reduced outer diameter, spherical area on the outer diameter for automatic alignment compensation, O-rings for elastic seating, hard-anodized surface
- Equipped with JUM-01 liner made of iglide® J
- Dimensions otherwise equivalent to the standard for recirculating ball bearings
- Secured by retaining clips according to DIN 471 or 472 (not included in delivery)
- Recommended housing bore H7
- O-ring grease recommended for install

Order key

Type					Size
R	J	U	M	- 03 -	10
Closed	iglide® J	Liner	Metric	Self-aligning	Diameter

iglide® material options:
iglide® J: All around material
iglide® J200: Best for aluminum shafts
iglide® E7: Best for steel/stainless steel shafts
iglide® T500 (X)*: For high temps up to 356°F (180°C) in aluminum adapter

Dimensions [mm]

Part No.	Housing bore Ø H7 [mm]	d1 Tolerance[78)]	d2 h8	B h10	B1 H10	s H10	dn h10	ds h10	do	o +0.1	e	R
RJZM-03-08[81)]	16	+0.032 +0.070	15.8	24.9	16.4	1.10	15.0	15.5	13.2	1.86	5.0	20.0
RJUM-03-10	19	+0.030 +0.088	18.8	28.9	21.8	1.30	17.5	18.5	15.4	1.86	5.0	13.0
RJUM-03-12	22	+0.030 +0.088	21.8	31.9	22.8	1.30	20.5	21.5	18.4	1.86	6.0	18.0
RJUM-03-16	26	+0.030 +0.088	25.8	35.9	24.9	1.30	24.2	25.5	20.4	2.86	8.0	32.0
RJUM-03-20	32	+0.030 +0.091	31.8	44.8	31.5	1.60	29.6	31.5	26.4	2.86	10.0	50.0
RJUM-03-25	40	+0.030 +0.091	39.8	57.8	44.1	1.85	36.5	39.0	34.4	2.86	12.5	39.0
RJUM-03-30	47	+0.040 +0.110	46.7	67.8	52.1	1.85	43.5	46.0	41.4	2.86	15.0	57.0
RJUM-03-40	62	+0.040 +0.115	61.7	79.8	60.9	2.15	57.8	61.0	56.4	2.86	20.0	100.0
RJUM-03-50	75	+0.050 +0.130	74.7	99.8	78.0	2.65	70.5	74.0	69.4	2.86	25.0	157.0

[78)] according to igus® testing method ➤ Page 1096
[81)] Ø < 10 mm use iglide® JSM sleeve bearings
[82)] Design standards ➤ Page 1001
Please note: Installation instructions ➤Page 1003
Floating bearing ➤ Page 1001

Load Data

Part No.	F max, dynamic p = 5 MPa (N)	F max, static p = 35 MPa (N)
RJZM-03-08[81)]	960	6,720
RJUM-03-10	725	5,075
RJUM-03-12	960	6,720
RJUM-03-16	1,440	10,080
RJUM-03-20	2,250	15,750
RJUM-03-25	3,625	25,375
RJUM-03-30	5,100	35,700
RJUM-03-40	8,000	56,000
RJUM-03-50	12,500	87,500

Also available with liners:

J200UM-01

E7UM-01

TUM-01*

*European part numbers for the high temperature liner begin with X. Example XUM-...

DryLin® R Linear - Product range

Closed, anodized aluminum adapter

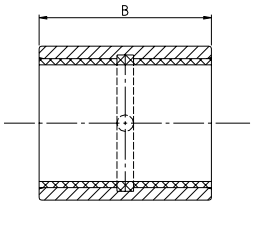

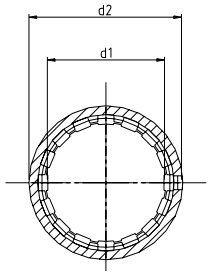

- Closed, anodized aluminum adapter
- Dimensions equivalent to the standard for recirculating ball bearings
- Equipped with JUM-02 liner made of iglide® J
- Secured by pressfit in a recommended housing bore
- Recommended housing bore H7 for steel housings or K7 for aluminum

Order key

Type						Size
R	J	U	M	- 02	-10	
Closed	iglide® J	Liner	Metric	-02 = Standard -22 = Low clearance		Diameter

iglide® material options:
iglide® J: All around material
iglide® T500 (X)*: For high temps up to 356°F (180°C) in aluminum adapter

RJUM-02, Standard Clearance

Dimensions [mm]

Part No.	Housing bore Ø H7/K7 [mm]	d1 Tolerance**	F max. Dynamic Load [N] P = 5 MPa	F max. Static Load {N] P = 35 MPa	Weight (g)	d1	d2 k7	B h10
RJZM-02-06[81)]	12	.0320 - .0700	600	4200	4	6	12	22
RJZM-02-08[81)]	15	.0320 - .0700	650	4550	6	8	15	24
RJUM-02-10	17	.0300 - .0880	650	4550	8	10	17	26
RJUM-02-12	19	.0300 - .0880	840	5880	10	12	19	28
RJUM-02-16	24	.0300 - .0880	1200	8400	17	16	24	30
RJUM-02-20	28	.0300 - .0910	1500	10500	18	20	28	30
RJUM-02-25	35	.0300 - .0910	2500	17500	42	25	35	40
RJUM-02-30	40	.0400 - .1100	3750	26250	56	30	40	50
RJUM-02-40	52	.0400 - .1150	6000	42000	113	40	52	60
RJUM-02-50	60	.0500 - .1300	8750	61250	147	50	60	70

RJUM-22, Low Clearance

Dimensions [mm]

Part No.	Housing bore Ø H7/K7 [mm]	d1 Tolerance**	F max. Dynamic Load [N] P = 5 MPa	F max. Static Load {N] P = 35 MPa	Weight (g)	d1	d2 k7	B h10
RJZM-02-06[81)]	12				4	6	12	22
RJZM-02-08[81)]	15	.0160 - .0350	215	1510	6	8	15	24
RJUM-02-10	17	.0150 - .0440	146	1022	8	10	17	26
RJUM-02-12	19	.0150 - .0440	188	1321	10	12	19	28
RJUM-02-16	24	.0150 - .0440	269	1888	17	16	24	30
RJUM-02-20	28	.0150 - .0455	337	2360	18	20	28	30
RJUM-02-25	35	.0150 - .0455	562	3934	42	25	35	40
RJUM-02-30	40	.0200 - .0550	843	5901	56	30	40	50
RJUM-02-40	52	.0200 - .0575	1348	9441	113	40	52	60
RJUM-02-50	60	.0250 - .0650	1967	13769	147	50	60	70

[78)] According to igus® testing method ➤ Page 924
[81)] Ø < 10 mm use iglide® JSM sleeve bearings, [82)] Design standards ➤ Page 1001
Please note: Installation instructions ➤ Page 1003

DryLin® R Linear - Product range

Closed, anodized aluminum adapter iglide® J200 liner for aluminum shafts

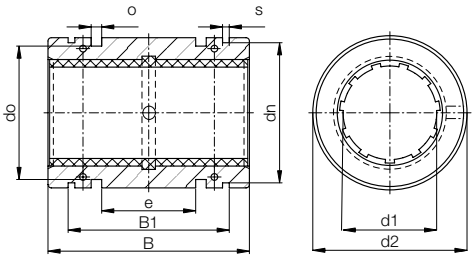

- Dimensionally interchangeable with linear ball bearings
- Equipped with liner made of iglide® J200
  Temperature range -40°F to +194°F (-40°C to +90°C)
  J200UM-01 (standard)
- T500 liner optional for chemicals/high temps TUM-01*
  (up to 482°F for steel housing, 356°F for aluminum)
- Suitable shafting for iglide® J: DryLin® AWM aluminum,

Order key

Type						Size
R	J200	U	M	- 01	- 10	
Closed	iglide® Material	Liner	Metric	Standard		Diameter

iglide® material options:
iglide® J: All around material
iglide® J200: Best for aluminum shafts
iglide® E7: Best for steel/stainless steel shafts
iglide® T500 (X)*: For high temps up to 356°F (180°C) in aluminum adapter

Dimensions [mm]

Part No.	d1	d1-Tolerance[78)]	d2	B	B1	s	dn
			h7	h10	H10	H10	h10
RJ200UM-01-10	10	+0.030 +0.088	19	29	21.6	1.30	17.5
RJ200UM-01-12	12	+0.030 +0.088	22	32	22.6	1.30	20.5
RJ200UM-01-16	16	+0.030 +0.088	26	36	24.6	1.30	24.2
RJ200UM-01-20	20	+0.030 +0.091	32	45	31.2	1.60	29.6
RJ200UM-01-25	25	+0.030 +0.091	40	58	43.7	1.85	36.5
RJ200UM-01-30	30	+0.040 +0.110	47	68	51.7	1.85	43.5
RJ200UM-01-40	40	+0.040 +0.115	62	80	60.3	2.15	57.8
RJ200UM-01-50	50	+0.050 +0.130	75	100	77.3	2.65	70.5
RJ200UM-01-60	60	+0.050 +0.140	90	125	101.7	3.15	86.5

Load Data

Part No.	F max, dynamic p = 5 MPa (N)	F max, static p = 35 MPa (N)
RJ200UM-01-10	725	5,075
RJ200UM-01-12	960	6,720
RJ200UM-01-16	1,440	10,080
RJ200UM-01-20	2,250	15,750
RJ200UM-01-25	3,625	25,375
RJ200UM-01-30	5,100	35,700
RJ200UM-01-40	8,000	56,000
RJ200UM-01-50	9,000	87,500
RJ200UM-01-60	12,000	120,000

[78)] According to igus® testing method ➤ Page 1096
[82)] Design standards ➤ Page 1001
Please note: Installation instructions ➤ Page 1003

*European part numbers for the high temperature liner begin with X.
Example XUM-...

Can be combined with:

RQA-01

RTA-01

RGA-01

RGAS-01

Also available with liners:

JUM-01

E7UM-01

TUM-01*

DryLin® R Linear - Product range

Closed, anodized aluminum adapter - Self-aligning iglide® J200 liner for aluminum shafts

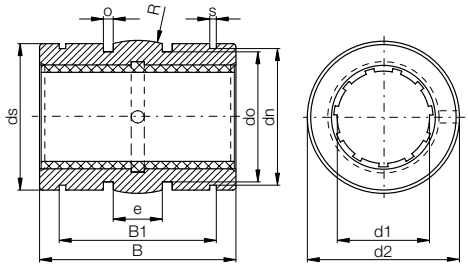

- Dimensionally interchangeable with linear ball bearings
- Equipped with liner made of iglide® J200
  Temperature range -40°F to +194°F (-40°C to +90°C)
  J200UM-01 (standard)
- T500 liner optional for chemicals/high temps TUM-01*
  (up to 482°F for steel housing, 356°F for aluminum)
- Suitable shafting for iglide® J: DryLin® AWM aluminum,

Order key

Type						Size
R	J200	U	M	- 03	- 10	
Closed	iglide® Material	Liner	Metric	self-aligning		Diameter

iglide® material options:
iglide® J: All around material
iglide® J200: Best for aluminum shafts
iglide® E7: Best for steel/stainless steel shafts
iglide® T500 (X)*: For high temps up to 356°F (180°C) in aluminum adapter

Dimensions [mm]

Part No.	Housing bore Ø H7 [mm]	d1 Tolerance[78]	d2 h8	B h10	B1 H10	s H10	dn h10	ds h10	do	o +0.1	e	R
RJ200UM-03-10	19	+0.030 +0.088	18.8	28.9	21.8	1.30	17.5	18.5	15.4	1.86	5.0	13.0
RJ200UM-03-12	22	+0.030 +0.088	21.8	31.9	22.8	1.30	20.5	21.5	18.4	1.86	6.0	18.0
RJ200UM-03-16	26	+0.030 +0.088	25.8	35.9	24.9	1.30	24.2	25.5	20.4	2.86	8.0	32.0
RJ200UM-03-20	32	+0.030 +0.091	31.8	44.8	31.5	1.60	29.6	31.5	26.4	2.86	10.0	50.0
RJ200UM-03-25	40	+0.030 +0.091	39.8	57.8	44.1	1.85	36.5	39.0	34.4	2.86	12.5	39.0
RJ200UM-03-30	47	+0.040 +0.110	46.7	67.8	52.1	1.85	43.5	46.0	41.4	2.86	15.0	57.0
RJ200UM-03-40	62	+0.040 +0.115	61.7	79.8	60.9	2.15	57.8	61.0	56.4	2.86	20.0	100.0
RJ200UM-03-50	75	+0.050 +0.130	74.7	99.8	78.0	2.65	70.5	74.0	69.4	2.86	25.0	157.0

Load Data

Part No.	F max, dynamic p = 5 MPa (N)	F max, static p = 35 MPa (N)
RJ200UM-03-10	725	5,075
RJ200UM-03-12	960	6,720
RJ200UM-03-16	1,440	10,080
RJ200UM-03-20	2,250	15,750
RJ200UM-03-25	3,625	25,375
RJ200UM-03-30	5,100	35,700
RJ200UM-03-40	8,000	56,000
RJ200UM-03-50	9,000	87,500

[78] According to igus® testing method ➤ Page 1096
[82] Design standards ➤ Page 1001
Please note: Installation instructions ➤ Page 1003

*European part numbers for the high temperature liner begin with X.
Example XUM-...

Can be combined with:

RQA-01

RTA-01

RGA-01

RGAS-01

Also available with liners:

JUM-01

E7UM-01

TUM-01*

DryLin® R Linear - Product range

Closed, anodized aluminum adapter - iglide® E7 liner
For steel, chrome plated, stainless steel shafting

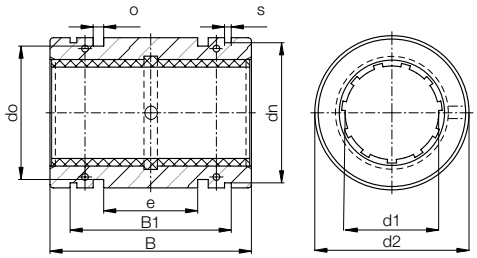

- Dimensionally interchangeable with linear ball bearings
- Equipped with liner made of iglide® E7
  Temperature range -40°F to +194°F (-40°C to +90°C) J200UM-01 (standard)
- T500 liner optional for chemicals/high temps TUM-01*
  (up to 482°F for steel housing, 356°F for aluminum)
- Suitable shafting for iglide® J: case-hardened, 300 series stainless, hard-chrome and hard-stainless steel

Order key

Type						Size	
R	E7	U	M	-	01	-	10
Closed	iglide® Material	Liner	Metric		Standard		Diameter

iglide® material options:
iglide® J: All around material
iglide® J200: Best for aluminum shafts
iglide® E7: Best for steel/stainless steel shafts
iglide® T500 (X)*: For high temps up to 356°F (180°C) in aluminum adapter

Dimensions [mm]

Part No.	d1	d1-Tolerance[78)]	d2	B	B1	s	dn
			h7	h10	H10	H10	h10
RE7UM-01-10	10	+0.030 +0.088	19	29	21.6	1.30	17.5
RE7UM-01-12	12	+0.030 +0.088	22	32	22.6	1.30	20.5
RE7UM-01-16	16	+0.030 +0.088	26	36	24.6	1.30	24.2
RE7UM-01-20	20	+0.030 +0.091	32	45	31.2	1.60	29.6
RE7UM-01-25	25	+0.030 +0.091	40	58	43.7	1.85	36.5
RE7UM-01-30	30	+0.040 +0.110	47	68	51.7	1.85	43.5
RE7UM-01-40	40	+0.040 +0.115	62	80	60.3	2.15	57.8
RE7UM-01-50	50	+0.050 +0.130	75	100	77.3	2.65	70.5
RE7UM-01-60	60	+0.050 +0.140	90	125	101.7	3.15	86.5

78) According to igus® testing method ➤ Page 1096
82) Design standards ➤ Page 1001
Please note: Installation instructions ➤ Page 1003

*European part numbers for the high temperature liner begin with X. Example XUM-...

Load Data

Part No.	F max, dynamic p = 5 MPa (N)	F max, static p = 35 MPa (N)
RE7UM-01-10	725	5,075
RE7UM-01-12	960	6,720
RE7UM-01-16	1,440	10,080
RE7UM-01-20	2,250	15,750
RE7UM-01-25	3,625	25,375
RE7UM-01-30	5,100	35,700
RE7UM-01-40	8,000	56,000
RE7UM-01-50	9,000	87,500
RE7UM-01-60	12,000	120,000

Can be combined with:

RQA-01

RTA-01

RGA-01

RGAS-01

Also available with liners:

JUM-01

J200UM-01

TUM-01*

DryLin® R Linear - Product range

Closed, anodized aluminum adapter - Self-aligning - iglide® E7 liner For steel, chrome plated, stainless steel shafting

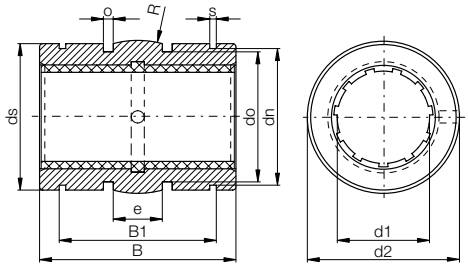

- Dimensionally interchangeable with linear ball bearings
- Equipped with liner made of iglide® E7
  Temperature range -40°F to +194°F (-40°C to +90°C) J200UM-01 (standard)
- T500 liner optional for chemicals/high temps TUM-01*
  (up to 482°F for steel housing, 356°F for aluminum)
- Suitable shafting for iglide® J: case-hardened, 300 series stainless, hard-chrome and hard-stainless steel

Order key

Type					Size
R	E7	U	M	- 03 -	10
Closed	iglide® Material	Liner	Metric	self-aligning	Diameter

iglide® material options:
iglide® J: All around material
iglide® J200: Best for aluminum shafts
iglide® E7: Best for steel/stainless steel shafts
iglide® T500 (X)*: For high temps up to 356°F (180°C) in aluminum adapter

Dimensions [mm]

Part No.	Housing bore Ø H7 [mm]	d1 Tolerance[78]	d2 h8	B h10	B1 H10	s H10	dn h10	ds h10	do	o +0.1	e	R
RE7UM-03-10	19	+0.030 +0.088	18.8	28.9	21.8	1.30	17.5	18.5	15.4	1.86	5.0	13.0
RE7UM-03-12	22	+0.030 +0.088	21.8	31.9	22.8	1.30	20.5	21.5	18.4	1.86	6.0	18.0
RE7UM-03-16	26	+0.030 +0.088	25.8	35.9	24.9	1.30	24.2	25.5	20.4	2.86	8.0	32.0
RE7UM-03-20	32	+0.030 +0.091	31.8	44.8	31.5	1.60	29.6	31.5	26.4	2.86	10.0	50.0
RE7UM-03-25	40	+0.030 +0.091	39.8	57.8	44.1	1.85	36.5	39.0	34.4	2.86	12.5	39.0
RE7UM-03-30	47	+0.040 +0.110	46.7	67.8	52.1	1.85	43.5	46.0	41.4	2.86	15.0	57.0
RE7UM-03-40	62	+0.040 +0.115	61.7	79.8	60.9	2.15	57.8	61.0	56.4	2.86	20.0	100.0
RE7UM-03-50	75	+0.050 +0.130	74.7	99.8	78.0	2.65	70.5	74.0	69.4	2.86	25.0	157.0

[78] According to igus® testing method ➤ Page 1096
[82] Design standards ➤ Page 1001
Please note: Installation instructions ➤ Page 1003

*European part numbers for the high temperature liner begin with X. Example XUM-...

Load Data

Part No.	F max, dynamic p = 5 MPa (N)	F max, static p = 35 MPa (N)
RE7UM-03-10	725	5,075
RE7UM-03-12	960	6,720
RE7UM-03-16	1,440	10,080
RE7UM-03-20	2,250	15,750
RE7UM-03-25	3,625	25,375
RE7UM-03-30	5,100	35,700
RE7UM-03-40	8,000	56,000
RE7UM-03-50	9,000	87,500

Can be combined with:

RQA-01

RTA-01

RGA-01

RGAS-01

Also available with liners:

JUM-01

J200UM-01

TUM-01*

DryLin® R Linear - Product range

Low-cost linear plain bearing

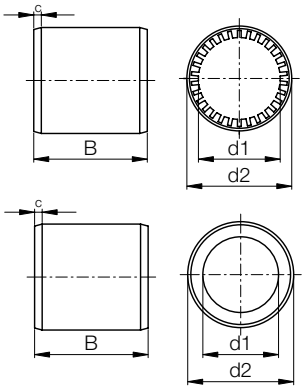

Order key

Type	Size
R J260 U M	-02-12

Closed | iglide® J260 | Liner | Metric | Compact | Diameter

- Dimensions equivalent to the standard for recirculating ball bearings
- 2 Variations: RJ260M (with plain design) and RJ260UM (grooved structure)

78) According to igus® testing method ➤ Page 1096
82) Design standards ➤ Page 1001
Please note: Installation instructions ➤ Page 1003

Technical Data and dimensions [mm]

Part No.	d1	d1-Tolerance[78)]	d2	B	C	F max. dynamic P = 5 MPa [N]	F max. static P = 35 MPa [N]	Weight [g]
Grooved bearing								
RJ260UM-02-12	12	+0.035 +0.080	19	28	1.5x15°	420	2,940	6.2
RJ260UM-02-16	16	+0.035 +0.080	24	30	1.5x15°	600	4,200	9.7
RJ260UM-02-20	20	+0.040 +0.095	28	30	2.0x15°	750	5,250	11.7
RJ260UM-02-25	25	+0.040 +0.095	35	40	2.0x15°	1,250	8,750	22.8

DryLin® R Linear - Product range

Closed, 303 stainless steel adapter (1.4305) - iglide® J liner

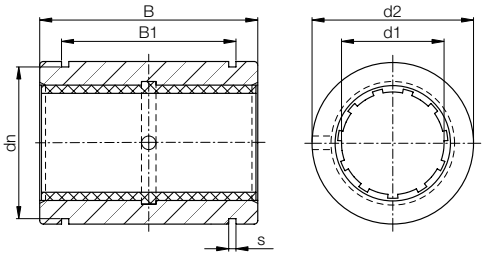

- 303 stainless steel adapter
- Dimensionally interchangeable with linear ball bearings
- Equipped with liner made of iglide® J
  Temperature range -40°F to +194°F (-40°C to +90°C) JUM-01 (standard)

Order key

Type					Size	Option
R	J	U	M	- 01	- 12	- ES
Closed	iglide® Material	Liner	Metric	Standard	Diameter	Stainless steel

iglide® material options:
iglide® J: All around material
iglide® J200: Best for aluminum shafts
iglide® E7: Best for steel/stainless steel shafts
iglide® T500 (X)*: For high temps up to 482°F (250°C)

Dimensions [mm]

Part No.	d1	d1-Tolerance[78)]	d2	B	B1	s	dn
			h7	h10	H10	H10	h10
RJUM-01-12ES	12	+0.030 +0.088	22	32	22.6	1.30	20.5
RJUM-01-16ES	16	+0.030 +0.088	26	36	24.6	1.30	24.2
RJUM-01-20ES	20	+0.030 +0.091	32	45	31.2	1.60	29.6
RJUM-01-25ES	25	+0.030 +0.091	40	58	43.7	1.85	36.5
RJUM-01-30ES	30	+0.040 +0.110	47	68	51.7	1.85	43.5

Load Data

Part No.	F max, dynamic p = 5 MPa (N)	F max, static p = 35 MPa (N)	Weight [g]
RJUM-01-12-ES	960	6,720	60
RJUM-01-16-ES	1,440	10,080	84
RJUM-01-20-ES	2,250	15,750	147
RJUM-01-25-ES	3,625	25,375	324
RJUM-01-30-ES	5,100	35,700	486

DryLin® STAINLESS STEEL

[78)] According to igus® testing method ➤ Page 1096
[81)] Ø < 10 mm use iglide® JSM sleeve bearings
[82)] Design standards ➤ Page 1001
Please note: Installation instructions ➤ Page 1003

Also available with liners:

J200UM-01

E7UM-01

TUM-01

DryLin® R Linear - Product range

Split anodized aluminum adapter - iglide® J liner

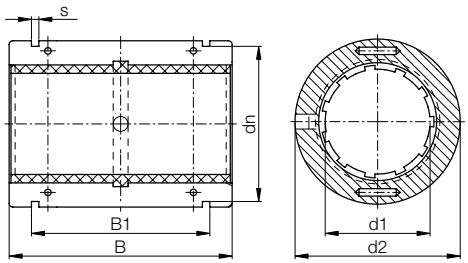

- Dimensions correspond to the standard for recirculating ball bearings
- Quick replacement of bearing lining without dismantling the shaft

78) According to igus® testing method ➤ Page 1096
82) Design standards ➤ Page 1001
Please note: Installation instructions ➤ Page 1003

Order key

Type						Size
T	J	U	M	-01	-10	
Split	iglide® Material	Liner	Metric	Standard	Diameter	

iglide® material options:
iglide® J: All around material
iglide® J200: Best for aluminum shafts
iglide® E7: Best for steel/stainless steel shafts
iglide® T500 (X)*: For high temps up to 356°F (180°C) in aluminum adapter

Technical Data

Part No.	d1-Tolerance[78] [mm]	F max. dynamic[82] P = 5 MPa [N]	F max. static[82] P = 35 MPa [N]	Weight [g]
TJUM-01-10	+0.030 +0.092	725	5,075	14
TJUM-01-12	+0.030 +0.097	960	6,720	19
TJUM-01-16	+0.030 +0.097	1,440	10,080	27
TJUM-01-20	+0.030 +0.103	2,250	15,750	49
TJUM-01-25	+0.030 +0.103	3,625	25,375	106
TJUM-01-30	+0.040 +0.124	5,100	35,700	166
TJUM-01-40	+0.040 +0.124	8,000	56,000	347
TJUM-01-50	+0.050 +0.146	12,500	87,500	577

Dimensions [mm]

Part No.	d1	d2	B h10	B1 H10	s H10	dn	Housing Bore Recommendations Min.	Max.
TJUM-01-10	10	**19** –0.020 –0.040	29	21.6	1.30	17.5	19.000	19.021
TJUM-01-12	12	**22** –0.020 –0.040	32	22.6	1.30	20.5	22.000	22.021
TJUM-01-16	16	**26** –0.020 –0.040	36	24.6	1.30	24.2	26.000	26.021
TJUM-01-20	20	**32** –0.020 –0.045	45	31.2	1.60	29.6	32.000	32.025
TJUM-01-25	25	**40** –0.030 –0.055	58	43.7	1.85	36.5	40.000	40.025
TJUM-01-30	30	**47** –0.030 –0.055	68	51.7	1.85	43.5	47.000	47.025
TJUM-01-40	40	**62** –0.030 –0.060	80	60.3	2.15	57.8	62.000	62.030
TJUM-01-50	50	**75** –0.030 –0.060	100	77.3	2.65	70.5	75.000	75.030

Can be combined with:

RQA-01

RTA-01

RGA-01

RGAS-01

Also available with liners:

JUM-11

XUM-01

E7UM-01

DryLin® R Linear - Product range

Split anodized aluminum adapter - Low clearance - iglide® J liner

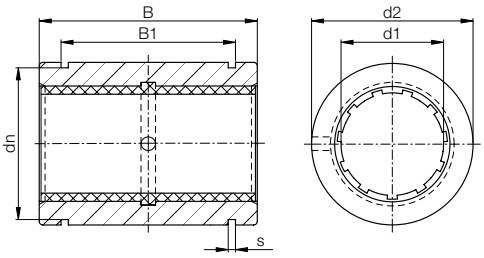

- Split, anodized aluminum adapter
- Dimensions equivalent to the standard for recirculating ball bearings
- Equipped with JUM-20 liner made of iglide® J
- Secured by retaining clips according to DIN 471 or 472 (not included in delivery)
- Recommended housing bore H7

Order key

Type						Size
T	J	U	M	-	21	-10
Split	iglide® Material	Liner	Inch		Low clearance	Diameter

iglide® material options:
iglide® J: All around material
iglide® J200: Best for aluminum shafts
iglide® E7: Best for steel/stainless steel shafts
iglide® T500 (X)*: For high temps up to 356°F (180°C) in aluminum adapter

Dimensions [mm]

Part No.	d1	d2	Tolerance	B h10	B1 H10	s H10	dn
TJUM-21-10	10	19	-.0200 /-.0400	29	21.6	1.30	17.5
TJUM-21-12	12	22	-.0200 /-.0400	32	22.6	1.30	20.5
TJUM-21-16	16	26	-.0200 /-.0400	36	24.6	1.30	24.2
TJUM-21-20	20	32	-.0200 /-.0450	45	31.2	1.60	29.6
TJUM-21-25	25	40	-.0300 /-.0550	58	43.7	1.85	36.5
TJUM-21-30	30	47	-.0300 /-.0550	68	51.7	1.85	43.5
TJUM-21-40	40	62	-.0300 /-.0600	80	60.3	2.15	57.8
TJUM-21-50	50	75	-.0300 /-.0600	100	77.3	2.65	70.5

Load Data

Part No.	Nominal Size	Tolerance* Bearing Inner Diameter	F max. Dynamic Load P = 5 MPa (N)	F max. Static Load P = 35 MPa (N)	Weight (g)
TJUM-21-10	10	.0150 - .0460	725	5075	14
TJUM-21-12	12	.0150 - .0485	960	6720	19
TJUM-21-16	16	.0150 - .0485	1440	10080	27
TJUM-21-20	20	.0150 - .0515	2250	15750	49
TJUM-21-25	25	.0150 - .0515	3625	25375	106
TJUM-21-30	30	.0200 - .0620	5100	35700	166
TJUM-21-40	40	.0200 - .0620	8000	56000	347
TJUM-21-50	50	.0250 - .0730	12500	87500	577

Also available with liners:

J200UM-01

E7UM-01

TUM-01

78) According to igus® testing method ➤ Page 1096
82) Design standards ➤ Page 1001
Please note: Installation instructions ➤ Page 1003

DryLin® R Linear - Product range

Split anodized aluminum adapter - self-aligning - iglide® J liner

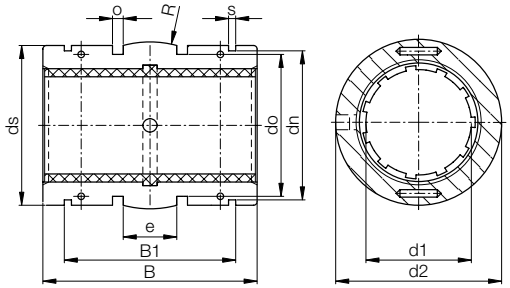

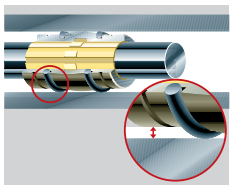

- With spherical area on the outer diameter for self aligning purposes and O-rings for elastic seating
- Dimensions correspond to the standard for recirculating ball bearings

[78] According to igus® testing method ➤ Page 1096
[82] Design standards ➤ Page 1001
Please note: Installation instructions ➤ Page 1003
Floating bearing ➤ Page 1001

Order key

Type				Size	
T	J	U	M	- 03	- 10
Split	iglide® J	Liner	Metric	Self aligning	Diameter

iglide® material options:
iglide® J: All around material
iglide® J200: Best for aluminum shafts
iglide® E7: Best for steel/stainless steel shafts
iglide® T500 (X)*: For high temps up to 356°F (180°C) in aluminum adapter

Technical Data

Part No.	d1-Tolerance[78] [mm]	F max. dynamic[82] P = 5 MPa [N]	F max. static[82] P = 35 MPa [N]	Weight [g]
TJUM-03-10	+0.030 +0.092	725	5,075	11
TJUM-03-12	+0.030 +0.097	960	6,720	17
TJUM-03-16	+0.030 +0.097	1,440	10,080	23
TJUM-03-20	+0.030 +0.103	2,250	15,750	44
TJUM-03-25	+0.030 +0.103	3,625	25,375	92
TJUM-03-30	+0.040 +0.124	5,100	35,700	145
TJUM-03-40	+0.040 +0.124	8,000	56,000	311
TJUM-03-50	+0.050 +0.146	12,500	87,500	542

Dimensions [mm]

Part No.	d1	d2	B h10	B1 H10	s H10	dn h10	ds h10	do	o +0.1	e	R
TJUM-03-10	10	**19** –0.020 –0.040	28.9	21.8	1.30	17.5	18.5	15.4	1.86	5.0	13.0
TJUM-03-12	12	**22** –0.020 –0.040	31.9	22.8	1.30	20.5	21.5	18.4	1.86	6.0	18.0
TJUM-03-16	16	**26** –0.020 –0.040	35.9	24.9	1.30	24.2	25.5	20.4	2.86	8.0	32.0
TJUM-03-20	20	**32** –0.020 –0.045	44.8	31.5	1.60	29.6	31.5	26.4	2.86	10.0	50.0
TJUM-03-25	25	**40** –0.030 –0.055	57.8	44.1	1.85	36.5	39.0	34.4	2.86	12.5	39.0
TJUM-03-30	30	**47** –0.030 –0.055	67.8	52.1	1.85	43.5	46.0	41.4	2.86	15.0	57.0
TJUM-03-40	40	**62** –0.030 –0.060	79.8	60.9	2.15	57.8	61.0	56.4	2.86	20.0	100.0
TJUM-03-50	50	**75** –0.030 –0.060	99.8	78.0	2.65	70.5	74.0	69.4	2.86	25.0	157.0

Can be combined with:

RQA-03

RTA-03

RGA-03

RGAS-03

Also available with liners:

JUM-11

XUM-01

E7UM-01

DryLin® R Linear - Product range

Open anodized aluminum adapter

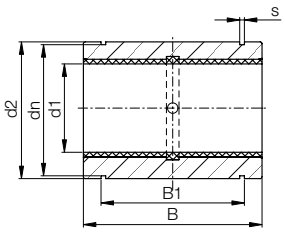

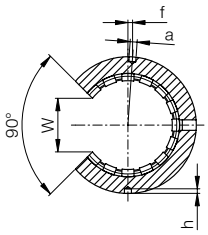

- For supported shafts
- Dimensions equivalent to the standard for recirculating ball bearings

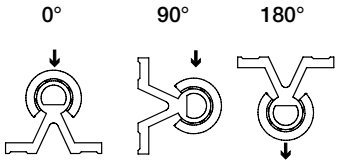

Order key

Type						Size
O	J	U	M	-01	-10	
Open	iglide® J	Liner	Metric	Standard		Diameter

[78] According to igus® testing method ➤ Page 1096
[82] Design standards ➤ Page 1001
Please note: Installation instructions ➤ Page 1003

iglide® material options:
iglide® J: All around material
iglide® J200: Best for aluminum shafts
iglide® E7: Best for steel/stainless steel shafts
iglide® T500 (X)*: For high temps up to 356°F (180°C) in aluminum adapter

Technical Data

Part No.	d1-Tolerance[78]	F max. [N] dyn.[82] P = 5 MPa			F max. [N] stat.[82] P = 35 MPa			Weight
		0°	90°	180°	0°	90°	180°	[g]
OJUM-01-10	+0.030 +0.088	725	500	196	5,075	3,500	1,370	11
OJUM-01-12	+0.030 +0.088	960	635	240	6,720	4,445	1,680	15
OJUM-01-16	+0.030 +0.088	1,440	990	396	10,080	6,943	2,772	21
OJUM-01-20	+0.030 +0.091	2,250	1,800	900	15,750	12,600	6,300	42
OJUM-01-25	+0.030 +0.091	3,625	2,953	1,523	25,375	20,670	10,658	70
OJUM-01-30	+0.040 +0.110	5,100	4,250	2,278	35,700	29,735	15,946	132
OJUM-01-40	+0.040 +0.115	8,000	6,810	3,800	56,000	47,660	26,660	278
OJUM-01-50	+0.050 +0.130	12,500	10,750	6,125	87,500	75,265	42,875	479

Dimensions [mm]

Part No.	d1	d2	B	W	a	dn	B1	s	f	h
		h7	h10	–1	+0.1	h10	H10	H10	±0.2	-0.5
OJUM-01-10	10	19	29	7.3	0.0	17.5	21.6	1.30	0	1.2
OJUM-01-12	12	22	32	9.0	3.0	20.5	22.6	1.30	1.33 (7°)	1.2
OJUM-01-16	16	26	36	11.6	2.2	24.2	24.6	1.30	0	1.2
OJUM-01-20	20	32	45	12.0	2.2	29.6	31.2	1.60	0	1.2
OJUM-01-25	25	40	58	14.5	3.0	36.5	43.7	1.85	–1.5 (–4.3°)	1.5
OJUM-01-30	30	47	68	16.6	3.0	43.5	51.7	1.85	2 (4.9°)	2.0
OJUM-01-40	40	62	80	21.0	3.0	57.8	60.3	2.15	1.5 (2.8°)	2.0
OJUM-01-50	50	75	100	25.5	5.0	70.5	77.3	2.65	2.5 (3.8°)	2.0

Can be combined with:

OQA-01

OGA-01

OTA-01

OGAS-01

Also available with liners:

TUMO-01

JUMO-11

DryLin® R Linear - Product range

Open anodized aluminum adapter - Low clearance - iglide® J liner

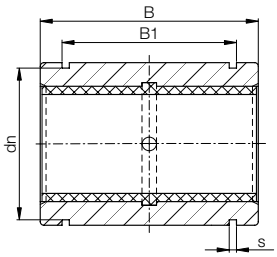

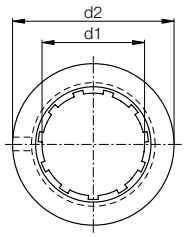

- Open, anodized aluminum adapter for supported shafts
- Dimensions equivalent to the standard for recirculating ball bearings
- Equipped with JUMO-20 liner made of iglide® J
- Recommended housing bore H7
- Secured the bearing with set screws (not included in the delivery)

Order key

Type					Size
O	J	U	M	- 21	-10
Open	iglide® J	Liner	Inch	Low clearance	Diameter

iglide® material options:
iglide® J: All around material
iglide® J200: Best for aluminum shafts

Dimensions [mm]

Part No.	d1	d2	B	W	a	dn	B1	s	f	h
		h7	h10		+0.1	h10	H10	H10	±0.2	-0.5
OJUM-21-10	10	19	29	7.3	0.0	17.5	21.6	1.30	0	1.2
OJUM-21-12	12	22	32	9.0	3.0	20.5	22.6	1.30	1.33 (7°)	1.2
OJUM-21-16	16	26	36	11.6	2.2	24.2	24.6	1.30	0	1.2
OJUM-21-20	20	32	45	12.0	2.2	29.6	31.2	1.60	0	1.2
OJUM-21-25	25	40	58	14.5	3.0	36.5	43.7	1.85	-1.5 (-4.3°)	1.5
OJUM-21-30	30	47	68	16.6	3.0	43.5	51.7	1.85	2 (4.9°)	2.0
OJUM-21-40	40	62	80	21.0	3.0	57.8	60.3	2.15	1.5 (2.8°)	2.0
OJUM-21-50	50	75	100	25.5	5.0	70.5	77.3	2.65	2.5 (3.8°)	2.0

Load Data

Part No.	Nominal Size	Tolerance* Bearing Inner Diameter	F max. Dynamic Load P = 5 MPa (N)			F max. Static Load P = 35 MPa (N)			Weight (g)
			0°	90°	180°	0°	90°	180°	
OJUM-21-10	10	.0150 - .0440	725	500	196	5075	3500	1370	11
OJUM-21-12	12	.0150 - .0440	960	635	240	6720	4445	1680	15
OJUM-21-16	16	.0150 - .0440	1440	990	396	10080	6943	2772	21
OJUM-21-20	20	.0150 - .0455	2250	1800	900	15750	12600	6300	42
OJUM-21-25	25	.0150 - .0455	3625	2953	1523	25375	20670	10658	70
OJUM-21-30	30	.0200 - .0550	5100	4250	2278	35700	29735	15946	132
OJUM-21-40	40	.0200 - .0575	8000	6810	3800	56000	47660	26660	278
OJUM-21-50	50	.0250 - .0650	12500	10750	6125	87500	75265	42875	479

[78] According to igus® testing method ➤ Page 1096
[82] Design standards ➤ Page 1001
Please note: Installation instructions ➤ Page 1003

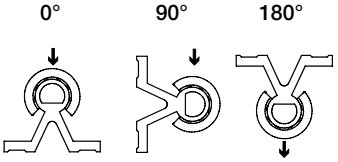

Also available with liners:

J200UM-01

E7UM-01

TUM-01

DryLin® R Linear - Product range

Open anodized aluminum adapter - self-aligning - iglide® J liner

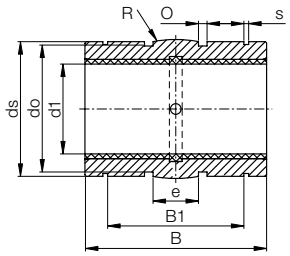

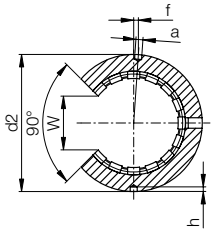

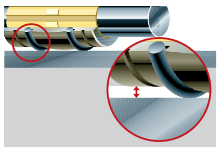

- With reduced outer diameter, spherical area on the outer diameter, O-rings for elastic seating and hard anodized surface
- Dimensions correspond to the standard for recirculating ball bearings
- Equipped with JUMO liner made of iglide® J
- Recommended housing bore H7
- Attachment by mounting bolts (not included in delivery)

78) According to igus® testing method ➤ Page 1096
82) Design standards ➤ Page 1001
Please note: Installation instructions ➤ Page 1003
Floating bearing ➤ Page 1001

Order key

Type						Size
O	J	U	M	-03-10		
Open	iglide® Material	Liner	Metric	Self-aligning		Diameter

iglide® material options:
iglide® J: All around material
iglide® J200: Best for aluminum shafts
iglide® E7: Best for steel/stainless steel shafts
iglide® T500 (X)*: For high temps up to 356°F (180°C) in aluminum adapter

Dimensions [mm]

Part No.	d1	d2	ds	e	o	do	B1	s	B	R	W	a	f	h
		h7	h10		+0.1		H10	H10	h10		–1	+0.1	±0.2	–0.5
OJUM-03-10	10	18.8	18.5	5.0	1.86	15.4	21.8	1.30	28.9	13.0	7.3	0.0	0	1.2
OJUM-03-12	12	21.8	21.5	6.0	1.86	18.4	22.8	1.30	31.9	18.0	9.0	3.0	1.33 (7°)	1.2
OJUM-03-16	16	25.8	25.5	8.0	2.86	20.4	24.9	1.30	35.9	32.0	11.6	2.2	0	1.2
OJUM-03-20	20	31.8	31.5	10.0	2.86	26.4	31.5	1.60	44.8	50.0	12.0	2.2	0	1.2
OJUM-03-25	25	39.8	39.0	12.5	2.86	34.4	44.1	1.85	57.8	39.0	14.5	3.0	–1.5 (–4.3°)	1.5
OJUM-03-30	30	46.7	46.0	15.0	2.86	41.4	52.1	1.85	67.8	57.0	16.6	3.0	2 (4.9°)	2
OJUM-03-40	40	61.7	61.0	20.0	2.86	56.4	60.9	2.15	79.8	100.0	21.0	3.0	1.5 (2.8°)	2
OJUM-03-50	50	74.7	74.0	25.0	2.86	69.4	78.0	2.65	99.8	157.0	25.5	5.0	2.5 (3.8°)	2

Technical Data

Part No.	Housing bore	d1-Tolerance78)	F max. [N] dyn82) P = 5 MPa			F max. [N] stat.82) P = 35 MPa			Weight
	Ø H7 [mm]		0°	90°	180°	0°	90°	180°	[g]
OJUM-03-10	19	+0.030 +0.088	725	500	196	5,075	3,500	1370	10
OJUM-03-12	22	+0.030 +0.088	960	635	240	6,720	4,445	1,680	13
OJUM-03-16	26	+0.030 +0.088	1,440	990	396	10,080	6,943	2,772	19
OJUM-03-20	32	+0.030 +0.091	2,250	1,800	900	15,750	12,600	6,300	38
OJUM-03-25	40	+0.030 +0.091	3,625	2,953	1,523	25,375	20,670	10,658	63
OJUM-03-30	47	+0.040 +0.110	5,100	4,250	2,278	35,700	29,735	15,946	119
OJUM-03-40	62	+0.040 +0.115	8,000	6,810	3,800	56,000	47,660	26,600	250
OJUM-03-50	75	+0.050 +0.130	12,500	10,750	6,125	87,500	75,265	42,875	431

Can be combined with:

OQA-01

OGA-01

OTA-01

OGAS-01

Also available with liners:

TUMO-01

JUMO-11

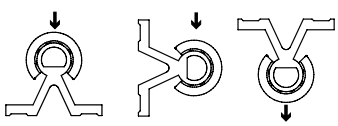

3D-CAD files, prices and delivery time ➤ www.igus.com/drylinR

DryLin® R Linear - Product range

Closed, anodized aluminum housing - short - iglide® J liner

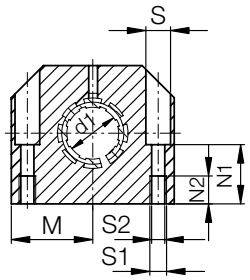

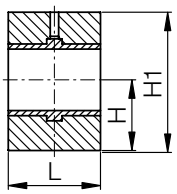

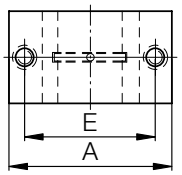

Order key

Type						Size	
R	J	U	M	-	05	-	10
Closed	iglide® J	Liner	Metric		Compact		Diameter

Dimensions [mm]

Part No.	d1	H	H1	A	M	E	S	S1	S2	N1	N2	L
		+0.01 -0.014				±0.15						
RJZM-[ ]-08[81]	8	14	27	32	16.0	23	6.0	M4	3.4	13	9	24
RJUM-[ ]-10	10	16	33	40	20.0	29	8.0	M5	4.3	16	11	26
RJUM-[ ]-12	12	17	33	40	20.0	29	8.0	M5	4.3	16	11	28
RJUM-[ ]-16	16	19	38	45	22.5	34	8.0	M5	4.3	18	11	30
RJUM-[ ]-20	20	23	45	53	26.5	40	9.5	M6	5.3	22	13	30
RJUM-[ ]-25	25	27	54	62	31.0	48	11.0	M8	6.6	26	18	40
RJUM-[ ]-30	30	30	60	67	33.5	53	11.0	M8	6.6	29	18	50
RJUM-[ ]-40	40	39	76	87	43.5	69	15.0	M10	8.4	38	22	60
RJUM-[ ]-50	50	47	92	103	51.5	82	18.0	M12	10.5	46	26	70

Technical Data

Part No.	d1-Tolerance[78]	F max, dynamic[82]	F max, static[82]	Weight
	[mm]	P = 5 MPa [N]	P = 35 MPa [N]	[g]
RJZM-[ ]-08[81]	+0.032 +0.070	960	6,720	46
RJUM-[ ]-10	+0.030 +0.088	650	4,550	71
RJUM-[ ]-12	+0.030 +0.088	840	5,880	78
RJUM-[ ]-16	+0.030 +0.088	1,200	8,400	106
RJUM-[ ]-20	+0.030 +0.091	1,500	10,500	132
RJUM-[ ]-25	+0.030 +0.091	2,500	17,500	253
RJUM-[ ]-30	+0.040 +0.110	3,750	26,250	374
RJUM-[ ]-40	+0.040 +0.115	6,000	42,000	713
RJUM-[ ]-50	+0,050 +0,130	8,750	61,250	1,168

Supplement the part number with one of the following choices.
Example: RJUM-05-10 for a standard version

For Standard version use 05
For Low Clearance version use 35

Also available with liners:

TUM-02

JUM-12

[78] According to igus® testing method ➤ Page 1096
[81] Ø < 10 mm use iglide® JSM sleeve bearings
[82] Design standards ➤ Page 1001
Please note: Installation instructions ➤Page 1003

DryLin® R Linear - Product range

Adjustable, anodized aluminum housing - short - iglide® J liner

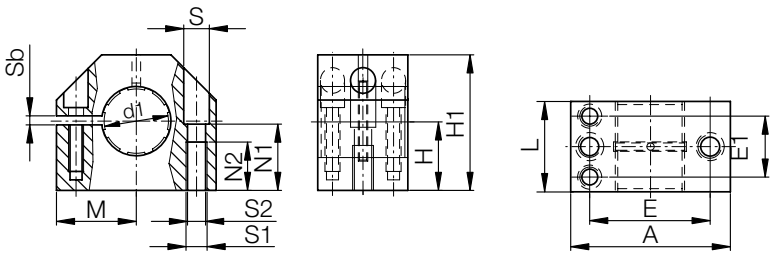

● With adjustable clearance for shaft diameters 12 to 50 mm

Order key

Type	Size
R J U M E	-05-12

Closed	iglide® J	Liner	Metric	Adjustable	Compact	Diameter

Dimensions [mm]

Part No.	d1	H +0.01 -0.014	H1	A	M	E ±0.15	E1 ±0.15	S	S1	S2	Sb	N1	N2	L
RJUME-□-12	12	17	33	40	20.0	29	18.0	8.0	4.3	M5	2	16	11	28
RJUME-□-16	16	19	38	45	22.5	34	19.0	8.0	4.3	M5	2	18	11	30
RJUME-□-20	20	23	45	53	26.5	40	20.0	9.5	5.3	M6	2	22	13	30
RJUME-□-25	25	27	54	62	31.0	48	25.5	11.0	6.6	M8	2	26	18	40
RJUME-□-30	30	30	60	67	33.5	53	30.5	11.0	6.6	M8	2	29	18	50
RJUME-□-40	40	39	76	87	43.5	69	36.0	15.0	8.4	M10	2	38	22	60
RJUME-□-50	50	47	92	103	51.5	82	44.0	18.0	10.5	M12	2	46	26	70

Technical Data

Part No.	d1-Tolerance[78] [mm]	F max. dynamic[82] P = 5 MPa [N]	F max. static[82] P = 35 MPa [N]	Weight [g]
RJUME-□-12	adjustable	840	5,880	78
RJUME-□-16	adjustable	1,200	8,400	106
RJUME-□-20	adjustable	1,500	10,500	132
RJUME-□-25	adjustable	2,500	17,500	253
RJUME-□-30	adjustable	3,750	26,250	374
RJUME-□-40	adjustable	6,000	42,000	713
RJUME-□-50	adjustable	8,750	61,250	1,168

Supplement the part number with one of the following choices.
Example: RJUM-05-10 for a standard version

For Standard version use 05
For Low Clearance version use 35

Also available with liners:

TUM-02

JUM-12

[78] According to igus® testing method ➤ Page 1096
[82] Design standards ➤ Page 1001
Please note: Installation instructions ➤ Page 1003

DryLin® R Linear - Product range

Split, anodized aluminum housing - short - iglide® J liner

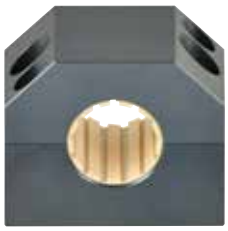

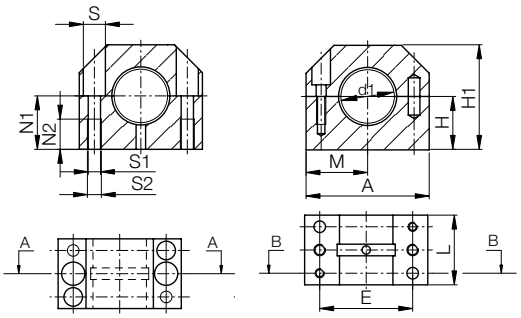

Sectional view A Sectional view B

Order key

Type					Size
T	J	U	M	-05	-16
Split	iglide® J	Liner	Metric	Compact	Diameter

- Replacement of the liner is possible without removing the shaft

[78] According to igus® testing method ➤ Page 1096
[82] Design standards ➤ Page 1001
Please note: Installation instructions ➤ Page 1003

Dimensions [mm]

Part No.	d1	H	H1	A	M	E	S	S1	S2	N1	N2	L
		±0.02				±0.15						
TJUM-□-16	16	19	38	45	22.5	34	8.0	M5	4.3	18	11	30
TJUM-□-20	20	23	45	53	26.5	40	9.5	M6	5.3	22	13	30
TJUM-□-25	25	27	54	62	31.0	48	11.0	M8	6.6	26	18	40
TJUM-□-30	30	30	60	67	33.5	53	11.0	M8	6.6	29	18	50
TJUM-□-40	40	39	76	87	43.5	69	15.0	M10	8.4	38	22	60

Technical Data

Part No.	d1-Tolerance[78]	F max. dynamic[82] P = 5 MPa	F max. static[82] P = 35 MPa	Weight
	[mm]	[N]	[N]	[g]
TJUM-□-16	+0.030 +0.120	1,200	8,400	105
TJUM-□-20	+0.030 +0.120	1,500	10,500	137
TJUM-□-25	+0.030 +0.120	2,500	17,500	253
TJUM-□-30	+0.040 +0.135	3,750	26,250	377
TJUM-□-40	+0.040 +0.135	6,000	42,000	720

Supplement the part number with one of the following choices.
Example: TJUM-[05]-10 for a standard version

For Standard version use [05]
For Low Clearance version use [35]

Also available with liners:

TUM-02

JUM-12

DryLin® R Linear - Product range

Closed, anodized aluminum housing - short twin - iglide® J liner

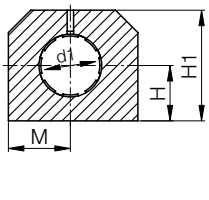

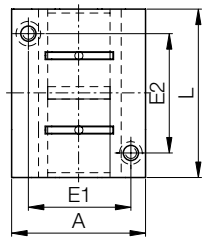

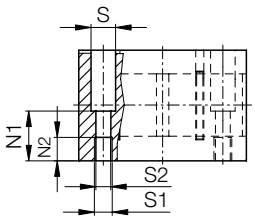

Order key

Type							Size
R	J	U	M	T	-	05-12	
Closed	iglide® J	Liner	Metric	Tandem	Compact	Diameter	

- Twin design
- Equipped with 2 JUM-02 liners to increase the guide length

78) According to igus® testing method ➤ Page 1096
82) Design standards ➤ Page 1001
Please note: Installation instructions ➤ Page 1003

Dimensions [mm]

Part No.	d1	H +0.01 -0.014	H1	A	M	E1 ±0.15	E2 ±0.15	S	S1	S2	N1	N2	L
RJUMT-05-12	12	17	33	40	20	29	35	8.0	M5	4.3	16.0	11	60
RJUMT-05-16	16	19	38	45	22.5	34	40	8.0	M5	4.3	18.0	11	65
RJUMT-05-20	20	23	45	53	26.5	40	45	9.5	M6	5.3	22.0	13	65
RJUMT-05-25	25	27	54	62	31	48	55	11.0	M8	6.6	26.0	18	85
RJUMT-05-30	30	30	60	67	33.5	53	70	11.0	M8	6.6	29.0	18	105
RJUMT-05-40	40	39	76	87	43.5	69	85	15.0	M10	8.4	38.0	22	125
RJUMT-05-50[84]	50	47	92	103	51.5	82	100	18.0	M12	10.5	46.0	26	145

Technical Data

Part No.	d1-Tolerance[78]	F max. dynamic[82] P = 5 MPa	F max. static[82] P = 35 MPa	Weight
	[mm]	[N]	[N]	[g]
RJUMT-05-12	+0.030 +0.088	840	5,880	170
RJUMT-05-16	+0.030 +0.088	1,200	8,400	250
RJUMT-05-20	+0.030 +0.091	1,500	10,500	300
RJUMT-05-25	+0.030 +0.091	2,500	17,500	550
RJUMT-05-30	+0.040 +0.110	3,750	26,250	750
RJUMT-05-40	+0.040 +0.115	6,000	42,000	1,500
RJUMT-05-50[84]	+0.050 +0.130	8,750	61,250	2,400

Also available with liners:

TUM-02

JUM-12

DryLin® R Linear - Product range

Closed, anodized aluminum housing - long - iglide® J liner

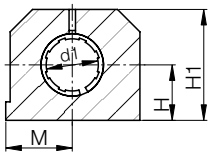

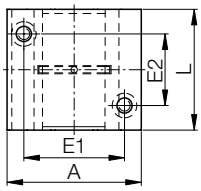

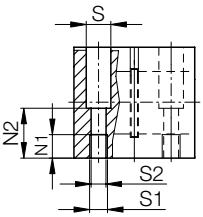

Order key

Type						Size
R	J	U	M	-06	-12	
Closed	iglide® Material	Liner	Metric	Long design		Diameter

[78] According to igus® testing method ➤ Page 1096
[82] Design standards ➤ Page 1001
Please note: Installation instructions ➤ Page 1003

iglide® material options:
iglide® J: All around material
iglide® J200: Best for aluminum shafts
iglide® E7: Best for steel/stainless steel shafts
iglide® T500 (X)*: For high temps up to 356°F (180°C) in aluminum adapter

Dimensions [mm]

Part No.	d1	H	H1	A	M	E1	E2	S	S1	S2	N1	N2	L
		+0.01 -0.014				±0.15	±0.15						
RJUM-□-12	12	18	35	43	21.5	32	23	8.0	M5	4.3	16.5	11	39
RJUM-□-16	16	22	42	53	26.5	40	26	10.0	M6	5.3	21.0	13	43
RJUM-□-20	20	25	50	60	30.0	45	32	11.0	M8	6.6	24.0	18	54
RJUM-□-25	25	30	60	78	39.0	60	40	15.0	M10	8.4	29.0	22	67
RJUM-□-30	30	35	70	87	43.5	68	45	15.0	M10	8.4	34.0	22	79
RJUM-□-40	40	45	90	108	54.0	86	58	18.0	M12	10.5	44.0	26	91
RJUM-□-50	50	50	105	132	66.0	108	50	20.0	M16	13.5	49.0	34	113

Technical Data

Part No.	d1-Tolerance[78]	F max. dynamic[82] P = 5 MPa	F max. static[82] P = 35 MPa	Weight
	[mm]	[N]	[N]	[g]
RJUM-□-12	+0.030 +0.088	960	6,720	121
RJUM-□-16	+0.030 +0.088	1,440	10,080	211
RJUM-□-20	+0.030 +0.091	2,250	15,750	323
RJUM-□-25	+0.030 +0.091	3,625	25,375	651
RJUM-□-30	+0.040 +0.110	5,100	35,700	1,050
RJUM-□-40	+0.040 +0.115	8,000	56,000	1,820
RJUM-□-50	+0.050 +0.130	12,500	87,500	3,250

Supplement the part number with one of the following choices.
Example: RJUM-06-10 for a standard version

For Standard version use 06
For Low Clearance version use 36

Can be combined with:

RGA-01

RGA-03

RJUM-06-LL

Also available with liners:

TUM-01

JUM-11

E7UM-01

DryLin® R Linear - Product range

Closed, floating pillow block - iglide® J liner

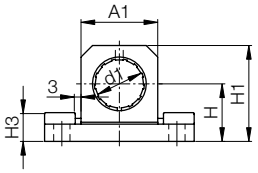

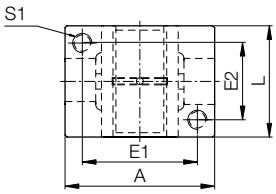

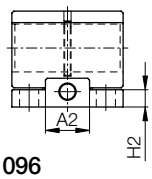

±3.0 mm

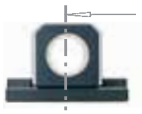

- Compensation of parallelism errors up to 6 mm
- Quick assembly on raw profiles

78) According to igus® testing method ➤ Page 1096
82) Design standards ➤ Page 1001
Please note: Installation instructions ➤ Page 1003
Floating bearing ➤ Page 1001

Order key

Type			Size	Options
R	J	U	M	-06-12 - LL
Closed	iglide® Material	Liner	Metric	Long design	Diameter	Floating

iglide® material options:
iglide® J: All around material
iglide® J200: Best for aluminum shafts
iglide® E7: Best for steel/stainless steel shafts
iglide® T500 (X)*: For high temps up to 356°F (180°C) in aluminum adapter

Dimensions [mm]

Part No.	d1	H	H1	A	E1	E2	S1	L	A1	A2	H2	H3
		±0.01			±0.15	±0.15						
RJUM-□-12 LL	12	18	28	43	32	23	M5	32	20	13	6	11
RJUM-□-16 LL	16	22	35	53	40	26	M6	36	26	15	7	11
RJUM-□-20 LL	20	25	41	60	45	32	M8	45	32	19	7	12.5
RJUM-□-25 LL	25	30	50	78	60	40	M10	58	40	23	9	15
RJUM-□-30 LL	30	35	59	87	68	45	M10	68	48	28	10	15
RJUM-□-40 LL	40	45	76	108	86	58	M12	80	62	80	20	20
RJUM-□-50 LL	50	50	89	132	108	50	M16	100	78	100	24	24

Technical Data

Part No.	d1-Tolerance78)	F max. static or dynamic82)	Weight
	[mm]	[N]	[g]
RJUM-□-12 LL	+0.030 +0.088	560	50
RJUM-□-16 LL	+0.030 +0.088	920	80
RJUM-□-20 LL	+0.030 +0.091	2,100	130
RJUM-□-25 LL	+0.030 +0.091	3,550	280
RJUM-□-30 LL	+0.040 +0.110	5,300	430
RJUM-□-40 LL	+0.040 +0.115	8,000	850
RJUM-□-50 LL	+0.050 +0.130	12,500	1,550

Supplement the part number with one of the following choices.
Example: RJUM-06-10 LL for a standard version

For Standard version use 06
For Low Clearance version use 36

Can be combined with:

RGA-01

RGA-03

RJUM-06

Also available with liners:

TUM-01

JUM-11

E7UM-01

DryLin® R Linear - Product range

Open, anodized aluminum housing - long - iglide® J liner

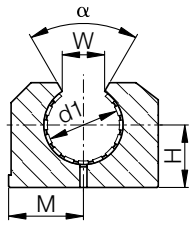

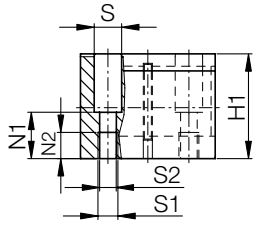

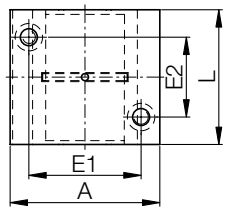

Order key

Type						Size
O	J	U	M	-	06	12
Open	iglide® Material	Liner	Metric	Long design		Diameter

[78] According to igus® testing method ➤ Page 1096
[82] Design standards ➤ Page 1001
Please note: Installation instructions ➤ Page 1003

iglide® material options:
iglide® J: All around material
iglide® J200: Best for aluminum shafts
iglide® E7: Best for steel/stainless steel shafts
iglide® T500 (X)*: For high temps up to 356°F (180°C) in aluminum adapter

Dimensions [mm]

Part No.	d1	H	H1	A	M	E1	E2	S	S1	S2	N1	N2	W	α	L
		+0.01; –0.014				±0.15	±0.15						–1	[°]	
OJUM-□-12	12	18	28	43	21.5	32	23	8.0	M5	4.3	16.5	11	10.2	78	39
OJUM-□-16	16	22	35	53	26.5	40	26	10.0	M6	5.3	21.0	13	11.6	78	43
OJUM-□-20	20	25	42	60	30.0	45	32	11.0	M8	6.6	24.0	18	12.0	60	54
OJUM-□-25	25	30	51	78	39.0	60	40	15.0	M10	8.4	29.0	22	14.5	60	67
OJUM-□-30	30	35	60	87	43.5	68	45	15.0	M10	8.4	34.0	22	16.6	57	79
OJUM-□-40	40	45	77	108	54.0	86	58	18.0	M12	10.5	44.0	26	21.0	56	91
OJUM-□-50	50	50	88	132	66.0	108	50	20.0	M16	13.5	49.0	34	25.5	54	113

Technical Data

Part No.	d1-Tolerance[78] [mm]	F max. Dynamic Load (N) P = 5 MPa			F max. Static Load (N) P = 35 MPa			Weight [g]
		0°	90°	180°	0°	90°	180°	
OJUM-□-12	+0.030 +0.088	960	635	240	6,720	4,445	1,680	95
OJUM-□-16	+0.030 +0.088	1440	990	396	10,080	6,943	2,772	158
OJUM-□-20	+0.030 +0.091	2250	1,800	900	15,750	12,600	6,300	266
OJUM-□-25	+0.030 +0.091	3625	2,953	1,523	25,375	20,670	10,658	530
OJUM-□-30	+0.040 +0.110	5100	4,250	2,278	35,700	29,735	15,946	818
OJUM-□-40	+0.040 +0.115	8000	6,810	3,800	56,000	47,660	26,600	1,485
OJUM-□-50	+0.050 +0.130	12,500	10,750	6,125	87,500	75,265	42,875	2,750

Supplement the part number with one of the following choices.
Example: OJUM-06-10 for a standard version

For Standard version use 06
For Low Clearance version use 36

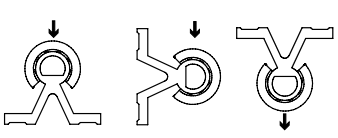

Can be combined with:

OGA-01

OGA-03

OJUM-06-LL

Also available with liners:

TUMO-01

JUMO-11

DryLin® R Linear - Product range

Open, anodized aluminum housing - long - adjustable - iglide® J liner

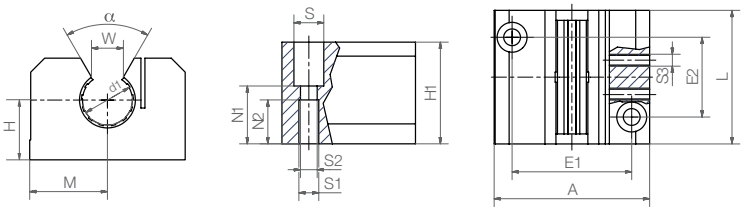

● With two set screws (DIN 913), clearance adjustment possible

78) According to igus® testing method ➤ Page 1096
82) Design standards ➤ Page 1001
Please note: Installation instructions ➤ Page 1003

iglide® material options:
iglide® J: All around material
iglide® J200: Best for aluminum shafts
iglide® E7: Best for steel/stainless steel shafts
iglide® T500 (X)*: For high temps up to 356°F (180°C) in aluminum adapter

Order key

Type							Size
O	J	U	M	E	-	06	10
Open	iglide® Material	Liner	Metric	Adjustable	Long design		Diameter

Dimensions [mm]

Part No.	d1	H	H1	A	M	E1	E2	S	S1	S2	S3	N1	N2	W	∝	L
		+0.01; –0.014				±0.15	±0.15							–1	[°]	
OJUME-□-12	12	18	28	43	21.5	32	23	8.0	M5	4.3	M4	16.5	11	10.2	78	39
OJUME-□-16	16	22	35	53	26.5	40	26	10.0	M6	5.3	M4	21.0	13	11.6	78	43
OJUME-□-20	20	25	42	60	30.0	45	32	11.0	M8	6.6	M5	24.0	18	12.0	60	54
OJUME-□-25	25	30	51	78	39.0	60	40	15.0	M10	8.4	M6	29.0	22	14.5	60	67
OJUME-□-30	30	35	60	87	43.5	68	45	15.0	M10	8.4	M6	34.0	22	16.6	57	79
OJUME-□-40	40	45	77	108	54.0	86	58	18.0	M12	10.5	M8	44.0	26	21.0	56	91
OJUME-□-50	50	50	88	132	66.0	108	50	20.0	M16	13.5	M8	49.0	34	25.5	54	113

Technical Data

Part No.	d1-Tolerance78) [mm]	F max. Dynamic Load (N) P = 5 MPa			F max. Static Load (N) P = 35 MPa			Weight [g]
		0°	90°	180°	0°	90°	180°	
OJUME-□-12	adjustable	960	635	240	6,720	4,445	1,680	100
OJUME-□-16	adjustable	1,440	990	396	10,080	6,943	2,772	160
OJUME-□-20	adjustable	2,250	1,800	900	15,750	12,600	6,300	270
OJUME-□-25	adjustable	3,625	2,953	1,523	25,375	20,670	10,658	530
OJUME-□-30	adjustable	5,100	4,250	2,278	35,700	29,735	15,946	820
OJUME-□-40	adjustable	8,000	6,810	3,800	56,000	47,660	26,600	1,490
OJUME-□-50	adjustable	12,500	10,750	6,125	87,500	75,265	42,875	2,750

Supplement the part number with one of the following choices.
Example: OJUME-06-10 for a standard version

For Standard version use 06
For Low Clearance version use 36

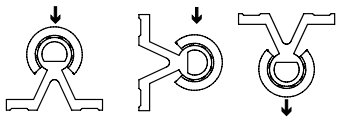

Can be combined with:

OGA-01

OGA-03

OJUM-06

Also available with liners:

TUMO-01

JUMO-11

DryLin® R Linear - Product range

Open, floating pillow block - iglide® J liner

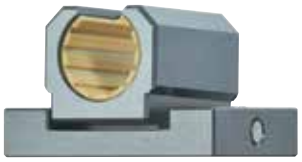

- Compensation of parallelism errors up to 6 mm

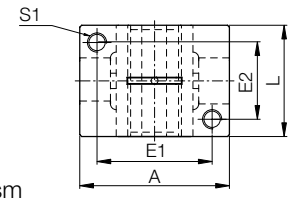

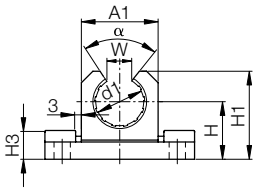

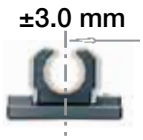

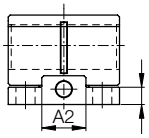

Order key

Type							Size	Options
O	J	U	M	- 06	-12	- LL		
Open	iglide® Material	Liner	Metric	Long design	Diameter	Floating bearing		

78) According to igus® testing method ➤ Page 1096
82) Design standards ➤ Page 1001
Please note: Installation instructions ➤ Page 1003
Floating Bearing ➤ Page 1001

iglide® material options:
iglide® J: All around material
iglide® J200: Best for aluminum shafts
iglide® E7: Best for steel/stainless steel shafts
iglide® T500 (X)*: For high temps up to 356°F (180°C) in aluminum adapter

Dimensions [mm]

Part No.	d1	H ±0.01	H1	A	E1 ±0.15	E2 ±0.15	S1	L	A1	A2	H2	H3	W –1	α [°]
OJUM-□-12 LL	12	18	24.5	43	32	23	M5	32	20	13	6	11	10.2	90
OJUM-□-16 LL	16	22	30.5	53	40	26	M6	36	26	15	7	11	11.6	90
OJUM-□-20 LL	20	25	37.0	60	45	32	M8	45	32	19	7	12.5	12.0	60
OJUM-□-25 LL	25	30	44.0	78	60	40	M10	58	40	23	9	15	14.5	60
OJUM-□-30 LL	30	35	52.5	87	68	45	M10	68	48	28	10	15	16.8	60
OJUM-□-40 LL	40	45	69.0	108	86	58	M12	80	62	80	20	20	21.0	60
OJUM-□-50 LL	50	50	80.0	132	108	50	M16	100	78	100	24	24	25.5	60

Technical Data

Part No.	d1-Tolerance78) [mm]	F max. static or dynamic82) [N]	F max. dynamic load at 180°82) [N]	Weight [g]
OJUM-□-12 LL	+0.030 +0.088	560	240	40
OJUM-□-16 LL	+0.030 +0.088	920	400	70
OJUM-□-20 LL	+0.030 +0.091	2,100	900	115
OJUM-□-25 LL	+0.030 +0.091	3,550	1,520	240
OJUM-□-30 LL	+0.040 +0.110	5,100	2,280	370
OJUM-□-40 LL	+0.040 +0.115	8,000	3,800	750
OJUM-□-50 LL	+0.050 +0.130	12,500	6,100	1,400

Supplement the part number with one of the following choices.
Example: OJUM-06-10 LL for a standard version

For Standard version use 06 (See page 27.25)
For Low Clearance version use 36 (See page 27.25)

Can be combined with:

OGA-01

OGA-03

OJUM-06

Also available with liners:

TUMO-01

JUMO-11

DryLin® R Linear - Product range

Round flange, pillow block - iglide® J liner

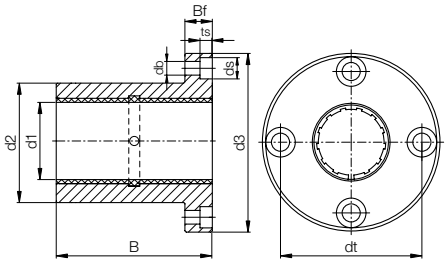

Order key

Type						Size
F	J	U	M	-01	-10	
Flange	iglide® Material	Liner	Metric	Round		Diameter

Dimensions [mm]

Part No.	d1	d2 h7	d3	dt	B	Bf	ts	db	ds
FJZM-☐-08	8	16	32	24	25	8	3.1	3.5	6.0
FJUM-☐-10	10	19	39	29	29	9	4.1	4.5	7.5
FJUM-☐-12	12	22	42	32	32	9	4.1	4.5	7.5
FJUM-☐-16	16	26	46	36	36	9	4.1	4.5	7.5
FJUM-☐-20	20	32	54	43	45	11	5.1	5.5	9.0
FJUM-☐-25	25	40	62	51	58	11	5.1	5.5	9.0
FJUM-☐-30	30	47	76	62	68	14	6.1	6.6	11.0
FJUM-☐-40	40	62	98	80	80	18	8.1	9.0	14.0
FJUM-☐-50	50	75	112	94	100	18	8.1	9.0	14.0

Technical Data

Part No.	d1-Tolerance[78]	F max. dynamic[82]	F max. static[82]	Weight
	[mm]	P = 5 MPa [N]	P = 35 MPa [N]	[g]
FJZM-☐-08	+0.032 +0.070	960	6,720	20
FJUM-☐-10	+0.030 +0.088	725	5,075	32
FJUM-☐-12	+0.030 +0.088	960	6,720	42
FJUM-☐-16	+0.030 +0.088	1,440	10,080	51
FJUM-☐-20	+0.030 +0.091	2,250	15,750	88
FJUM-☐-25	+0.030 +0.091	3,625	25,375	152
FJUM-☐-30	+0.040 +0.110	5,100	35,700	266
FJUM-☐-40	+0.040 +0.115	8,000	56,000	552
FJUM-☐-50	+0.050 +0.130	12,500	87,500	853

Supplement the part number with one of the following choices.
Example: FJUM-01-10 LL for a standard version

For Standard version use 01
For Low Clearance version use 31

Also available with liners:

TUM-01

JUM-11

E7UM-01

[78] According to igus® testing method ➤ Page 1096
[82] Design standards ➤ Page 1001
Please note: Installation instructions ➤ Page 1003

DryLin® R Linear - Product range

Square flange, pillow block - iglide® J liner

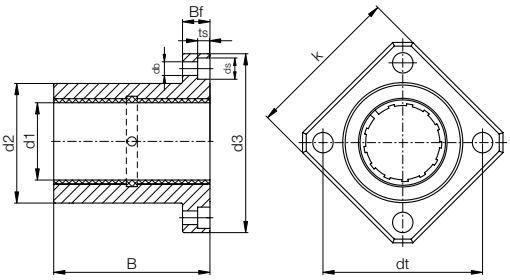

Order key

Type					Size	
F	J	U	M	- 02	-	10
Flange	iglide® J	Liner	Metric	Square		Diameter

Technical Data

Part No.	d1-Tolerance[78]	F max. dynamic[82] P = 5 MPa [N]	F max. static[82] P = 35 MPa [N]	Weight [g]
FJZM-☐-08	+0.032 +0.070	960	6,720	17
FJUM-☐-10	+0.030 +0.088	725	5,075	25
FJUM-☐-12	+0.030 +0.088	960	6,720	32
FJUM-☐-16	+0.030 +0.088	1,440	10,080	41
FJUM-☐-20	+0.030 +0.091	2,250	15,750	73
FJUM-☐-25	+0.030 +0.091	3,625	25,375	135
FJUM-☐-30	+0.030 +0.110	5,100	35,700	228
FJUM-☐-40	+0.030 +0.115	8,000	56,000	454
FJUM-☐-50	+0.030 +0.130	12,500	87,500	735

Dimensions [mm]

Part No.	d1	d2 h7	d3	dt	k	B	Bf	ts	db	ds
FJZM-☐-08	8	16	32	24	25	25	8	3.1	3.5	6.0
FJUM-☐-10	10	19	39	29	30	29	9	4.1	4.5	7.5
FJUM-☐-12	12	22	42	32	32	32	9	4.1	4.5	7.5
FJUM-☐-16	16	26	46	36	35	36	9	4.1	4.5	7.5
FJUM-☐-20	20	32	54	43	42	45	11	5.1	5.5	9.0
FJUM-☐-25	25	40	62	51	50	58	11	5.1	5.5	9.0
FJUM-☐-30	30	47	76	62	60	68	14	6.1	6.6	11.0
FJUM-☐-40	40	62	98	80	75	80	18	8.1	9.0	14.0
FJUM-☐-50	50	75	112	94	88	100	18	8.1	9.0	14.0

Supplement the part number with one of the following choices.
Example: FJUM-☐02☐-10 LL for a standard version

For Standard version use 02
For Low Clearance version use 32

Also available with liners:

TUM-01

JUM-11

E7UM-01

[78] According to igus® testing method ➤ Page 1096
[82] Design standards ➤ Page 1001
Please note: Installation instructions ➤ Page 1003

DryLin® R Linear - Product range

Round flange, twin pillow block - iglide® J liner

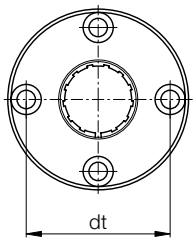

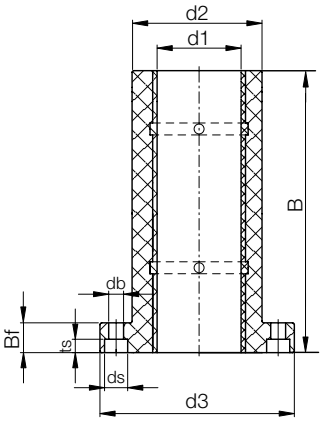

- Equipped with two JUM-02 liners for increased guiding length

Order key

Type							Size
F	J	U	M	T	- 01		- 10
Flange	iglide® J	Liner	Metric	Tandem	Round		Diameter

Technical Data

Part No.	Nominal size	d1-Tolerance[78] [mm]	Effective surface area [mm]	Weight [g]
FJZMT-01-08[85]	8	+0.032 +0.070	256	27,13
FJUMT-01-10	10	+0.030 +0.088	250	43,75
FJUMT-01-12	12	+0.030 +0.088	324	57,00
FJUMT-01-16	16	+0.030 +0.088	464	78,28
FJUMT-01-20	20	+0.030 +0.091	580	126,42
FJUMT-01-25	25	+0.030 +0.091	975	248,85
FJUMT-01-30	30	+0.030 +0.110	1,470	388,37
FJUMT-01-40	40	+0.030 +0.115	2,360	835,00
FJUMT-01-50	50	+0.030 +0.130	3,450	1352,30

Dimensions [mm]

Part No.	d1	d2 h7	d3	dt	B	Bf	ts	db	ds
FJZMT-01-08[85]	8	16	32	24	45	8	3.1	3.5	6.0
FJUMT-01-10	10	19	39	29	52	9	4.1	4.5	7.5
FJUMT-01-12	12	22	42	32	57	9	4.1	4.5	7.5
FJUMT-01-16	16	26	46	36	70	9	4.1	4.5	7.5
FJUMT-01-20	20	32	54	43	80	11	5.1	5.5	9.0
FJUMT-01-25	25	40	62	51	112	11	5.1	5.5	9.0
FJUMT-01-30	30	47	76	62	123	14	6.1	6.6	11.0
FJUMT-01-40	40	62	98	80	151	18	8.1	9.0	14.0
FJUMT-01-50	50	75	112	94	192	18	8.1	9.0	14.0

[78] According to igus® testing method ➤ Page 1096
[85] FJZMT-01/02-08 are fitted with 2 pieces of JSM-0810-16
Please note: Installation instructions ➤ Page 1003

DryLin® R Linear - Product range

Square flange, twin pillow block - iglide® J liner

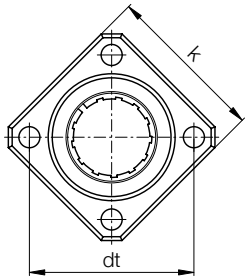

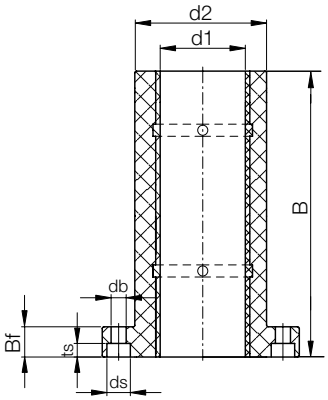

- Equipped with two JUM-02 liners for increased guiding length

Order key

Type						Size
F	J	U	M	T	- 02	- 10
Flange	iglide® J	Liner	Metric	Tandem	Round	Diameter

Technical Data

Part No.	Nominal size	d1-Tolerance[78]	Effective surface area	Weight
		[mm]	[mm]	[g]
FJZMT-02-08[85]	8	+0.032 +0.070	256	23,00
FJUMT-02-10	10	+0.030 +0.088	250	36,58
FJUMT-02-12	12	+0.030 +0.088	324	48,19
FJUMT-02-16	16	+0.030 +0.088	464	67,79
FJUMT-02-20	20	+0.030 +0.091	580	110,06
FJUMT-02-25	25	+0.030 +0.091	975	230,06
FJUMT-02-30	30	+0.030 +0.110	1,470	350,74
FJUMT-02-40	40	+0.030 +0.115	2,360	739,30
FJUMT-02-50	50	+0.030 +0.130	3,450	1249,30

Dimensions [mm]

Part No.	d1	d2 h7	d3	dt	k	B	Bf	ts	db	ds
FJZMT-02-08[85]	8	16	32	24	25	45	8	3.1	3.5	6.0
FJUMT-02-10	10	19	39	29	30	52	9	4.1	4.5	7.5
FJUMT-02-12	12	22	42	32	32	57	9	4.1	4.5	7.5
FJUMT-02-16	16	26	46	36	35	70	9	4.1	4.5	7.5
FJUMT-02-20	20	32	54	43	42	80	11	5.1	5.5	9.0
FJUMT-02-25	25	40	62	51	50	112	11	5.1	5.5	9.0
FJUMT-02-30	30	47	76	62	60	123	14	6.1	6.6	11.0
FJUMT-02-40	40	62	98	80	75	151	18	8.1	9.0	14.0
FJUMT-02-50	50	75	112	94	88	192	18	8.1	9.0	14.0

[78] According to igus® testing method ➤ Page 1096
[85] FJZMT-01/02-08 are fitted with 2 pieces of JSM-0810-16
Please note: Installation instructions ➤ Page 1003

Notes

DryLin® R Linear - Product range

Quad block - Closed design

- Housing: Aluminum, equipped with four DryLin® R linear plain bearings

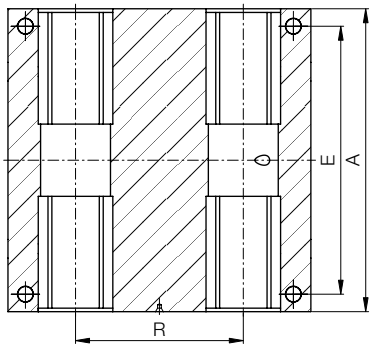

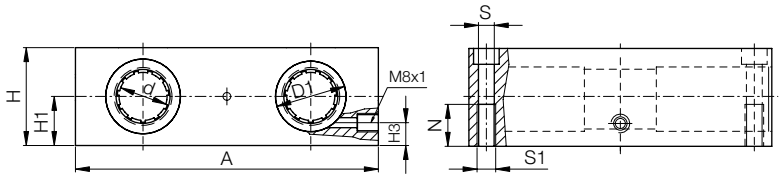

Order key

Type	Options	Size
R Q A	- 01	- 10
Quad block with RJUM bearings	Aluminum housing	Standard with RJUM-01	Diameter

Options:
01: Standard with RJUM-01
03: with RJUM-03
04: with RJM-01

Dimensions [mm]

Part No.			d	D1	A	H	H1	H3	R	N	E	S	S1
Standard	Self-aligning	Solid plastic											
with RJUM-01	with RJUM-03	with RJM-01											
RQA-01-08	–	**RQA-04-08**	8	16	65	23	11.5	8	32	11	55	4.3	M5
RQA-01-10	**RQA-03-10**	**RQA-04-10**	10	19	70	25	12.5	10	34	13	60	4.3	M5
RQA-01-12	**RQA-03-12**	**RQA-04-12**	12	22	85	32	16	13	42	13	73	5.3	M6
RQA-01-16	**RQA-03-16**	**RQA-04-16**	16	26	100	36	18	15	54	13	88	5.3	M6
RQA-01-20	**RQA-03-20**	**RQA-04-20**	20	32	130	46	23	19	72	18	115	6.6	M8
RQA-01-25	**RQA-03-25**	**RQA-04-25**	25	40	160	56	28	24	88	22	140	8.4	M10
RQA-01-30	**RQA-03-30**	**RQA-04-30**	30	47	180	64	32	27	96	26	158	10.5	M12
RQA-01-40	**RQA-03-40**	**RQA-04-40**	40	62	230	80	40	35	122	34	202	13.5	M16

Are equipped with:

RJUM-01

RJUM-03

RJM-01

Please note: Installation instructions ➤ Page 1003

DryLin® R Linear - Product range

Quad block - Open design

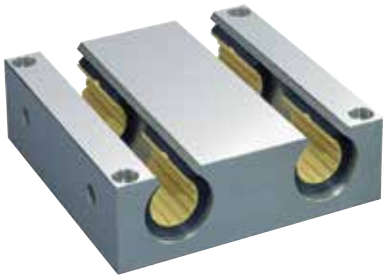

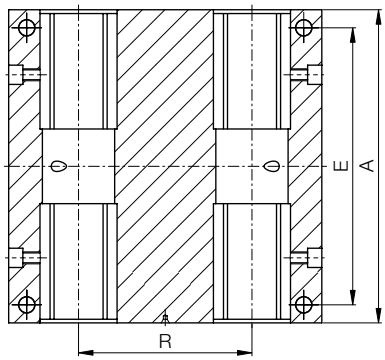

- Housing: Aluminum, equipped with four DryLin® R linear plain bearings

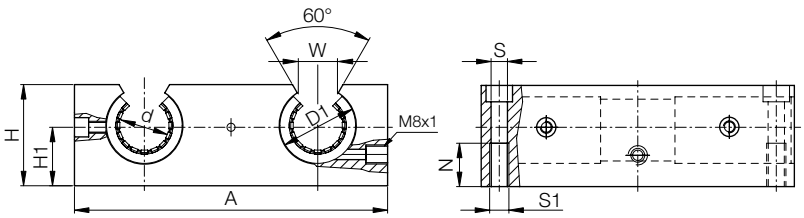

Order key

Type	Options	Size
O Q A	- 01	- 12
Quad block with OJUM bearings	Aluminium housing	Standard with OJUM-01	Diameter

Options:
01: Standard with OJUM-01
03: with OJUM-03

Dimensions [mm]

Part No.		d	D1	A	H	H1	W	R	N	E	S	S1
Standard with OJUM-01	**Self-aligning** with OJUM-03											
OQA-01-12	**OQA-03-12**	12	22	85	30	18	14	42	13	73	5.3	M6
OQA-01-16	**OQA-03-16**	16	26	100	35	22	17	54	13	88	5.3	M6
OQA-01-20	**OQA-03-20**	20	32	130	42	25	17	72	18	115	6.8	M8
OQA-01-25	**OQA-03-25**	25	40	160	51	30	21	88	22	140	9.0	M10
OQA-01-30	**OQA-03-30**	30	47	180	60	35	21	96	26	158	10.5	M12
OQA-01-40	**OQA-03-40**	40	62	230	77	45	27	122	34	202	13.5	M16

Are equipped with:

OJUM-01

OJUM-03

Please note: Installation instructions ➤ Page 1003

DryLin® R Linear - Product range

Pillow block - Closed - Twin design

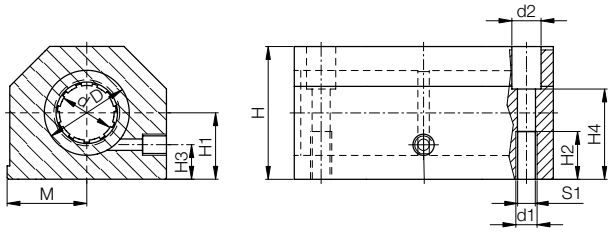

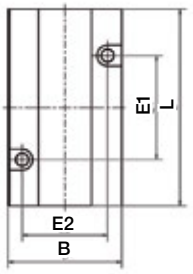

- Housing: Aluminum, equipped with 2 DryLin® R linear plain bearings to increase the guide length

Order key

Type	Options	Size
R T A	- 01	- 08

Tandem housing with RJUM bearing
Aluminum housing
Standard with RJUM-01
Diameter

Options:
01: Standard with RJUM-01
03: with RJUM-03
04: with RJM-01

Dimensions [mm]

Part No. Standard with RJUM-01	Self-aligning with RJUM-03	Solid plastic with RJM-01	d	D H6	H	H1 +0.01 −0.02	H2	H3	H4	S1	B	L +0.3	M ±0.02	E1 ±0.15	E2 ±0.15	d1	d2
RTA-01-08	–	**RTA-04-08**	8	16	28	13	13	8	23	M5	35	62	17.5	35	25	4.20	8
RTA-01-12	**RTA-03-12**	**RTA-04-12**	12	22	35	18	13	10	25	M6	43	76	21.5	40	30	5.20	10
RTA-01-16	**RTA-03-16**	**RTA-04-16**	16	26	42	22	13	12	30	M6	53	84	26.5	45	36	5.20	10
RTA-01-20	**RTA-03-20**	**RTA-04-20**	20	32	50	25	18	13	34	M8	60	104	30.0	55	45	6.80	11
RTA-01-25	**RTA-03-25**	**RTA-04-25**	25	40	60	30	22	15	40	M10	78	130	39.0	70	54	8.60	15
RTA-01-30	**RTA-03-30**	**RTA-04-30**	30	47	70	35	26	16	48	M12	87	152	43.5	85	62	10.30	18
RTA-01-40	**RTA-03-40**	**RTA-04-40**	40	62	90	45	34	20	60	M16	108	176	54.0	100	80	14.25	20

Are equipped with:

RJUM-01

RJUM-03

RJM-01

Please note: Installation instructions ➤ Page 1003

DryLin® R Linear - Product range

Pillow block - Open - Twin design

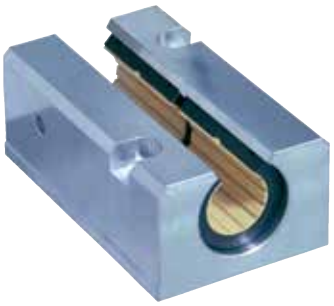

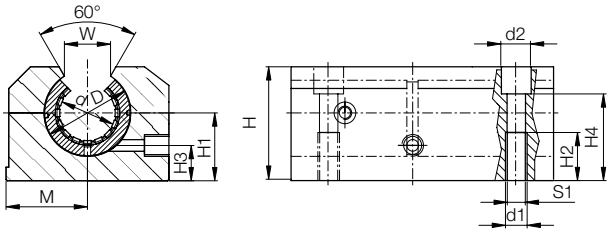

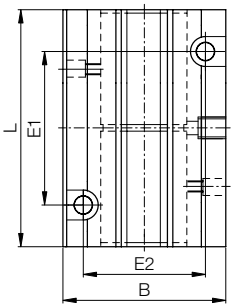

- Housing: Aluminum, equipped with 2 DryLin® R linear plain bearings to increase the guide length

Order key

Type	Options	Size
OTA	- 01	- 12

Tandem housing with OJUM bearing
Aluminum housing
Standard with OJUM-01
Diameter

Options:
01: Standard with OJUM-01
03: with OJUM-03

Dimensions [mm]

Part No.		d	D	H	H1	H2	H3	H4	S1	B	L	M	E1	E2	d1	d2	W
Standard	Self-aligning		H6		+0.01 −0.02						+0.3	±0.02	±0.15	±0.15			
with OJUM-01	with OJUM-03																
OTA-01-12	**OTA-03-12**	12	22	30	18	13	10	25	M6	43	76	21.5	40	30	5.20	10	14
OTA-01-16	**OTA-03-16**	16	26	35	22	13	12	30	M6	53	84	26.5	45	36	5.20	10	17
OTA-01-20	**OTA-03-20**	20	32	42	25	18	13	34	M8	60	104	30.0	55	45	6.80	11	17
OTA-01-25	**OTA-03-25**	25	40	51	30	22	15	40	M10	78	130	39.0	70	54	8.60	15	21
OTA-01-30	**OTA-03-30**	30	47	60	35	26	16	48	M12	87	152	43.5	85	62	10.30	18	21
OTA-01-40	**OTA-03-40**	40	62	77	45	34	20	60	M16	108	176	54.0	100	80	14.25	20	27

Are equipped with:

OJUM-01

OJUM-03

Please note: Installation instructions ➤ **Page 1003**

DryLin® R Linear - Product range

Pillow block - Closed - Long design

- Housing: Aluminum, equipped with 2 DryLin® R linear plain bearings

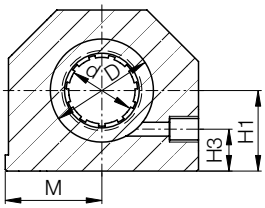

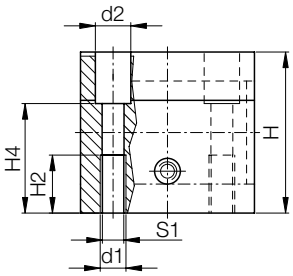

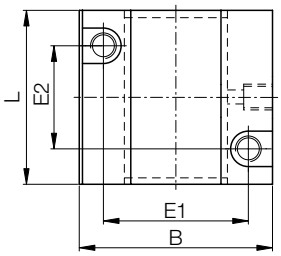

Order key

Type	Options	Size
R G A	- 01	- 12
Linear housing with RJUM bearings	Aluminum housing	Standard with RJUM-01	Diameter

Options:
01: Standard with RJUM-01
03: with RJUM-03
04: with RJM-01

Dimensions [mm]

Part No.			d	D	H	H1	H2	H3	H4	S1	B	L	M	E1	E2	d1	d2
Standard	Self-aligning	Solid plastic		H6		+0.01 −0.02						±0.3	±0.02	±0.15	±0.15		
with RJUM-01	with RJUM-03	with RJM-01															
RGA-01-08	–	RGA-04-08	8	16	28	13	10	8	14	M4	35	32	17.5	25	20	3.2	6
RGA-01-12	RGA-03-12	RGA-04-12	12	22	35	18	11	10	25	M5	43	39	21.5	32	23	4.2	6
RGA-01-16	RGA-03-16	RGA-04-16	16	26	42	22	13	12	30	M6	53	43	26.5	40	26	5.2	10
RGA-01-20	RGA-03-20	RGA-04-20	20	32	50	25	18	13	34	M8	60	54	30.0	45	32	6.8	11
RGA-01-25	RGA-03-25	RGA-04-25	25	40	60	30	22	15	40	M10	78	67	39.0	60	40	8.6	15
RGA-01-30	RGA-03-30	RGA-04-30	30	47	70	35	22	16	48	M10	87	79	43.5	68	45	8.6	15
RGA-01-40	RGA-03-40	RGA-04-40	40	62	90	45	26	20	60	M12	108	91	54.0	86	58	10.3	18

Please note: Installation instructions ➤ Page 1003

Are equipped with:

RJUM-01

RJUM-03

RJM-01

Can be combined with:

RJUM-06

DryLin® R Linear - Product range

Pillow block - Open - Long design

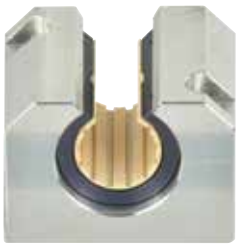

- Housing: Aluminum, equipped with 2 DryLin® R linear plain bearings

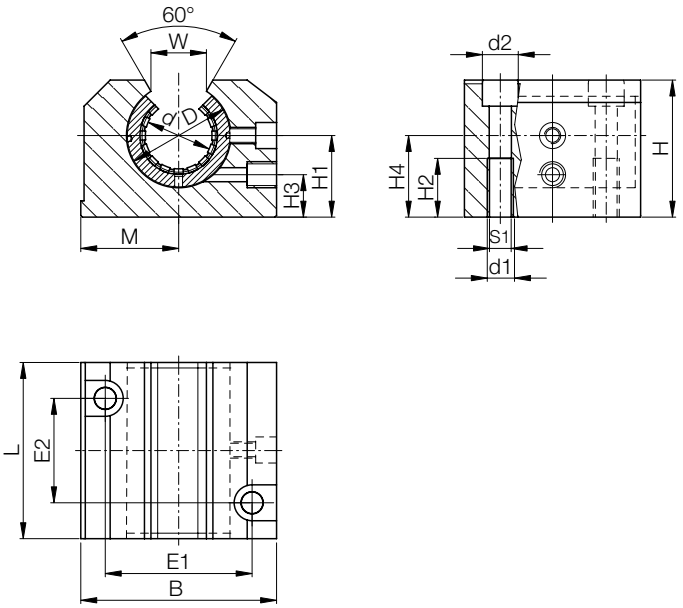

Order key

Type	Options	Size
O G A	- 01	- 12

Linear housing with OJUM bearings | Aluminum housing | Standard with OJUM-01 | Diameter

Options:
01: Standard with OJUM-01
03: with OJUM-03

Dimensions [mm]

Part No. Standard with OJUM-01	Self-aligning with OJUM-03	d	D H6	H	H1 +0.01 −0.02	H2	H3	H4	S1	B	L ±0.3	M ±0.02	E1 ±0.15	E2 ±0.15	d1	d2	W +0.6
OGA-01-12	**OGA-03-12**	12	22	28	18	11	8	25	M5	43	39	21.5	32	23	4.2	8	14
OGA-01-16	**OGA-03-16**	16	26	35	22	13	12	30	M6	53	43	26.5	40	26	5.2	10	17
OGA-01-20	**OGA-03-20**	20	32	42	25	18	13	34	M8	60	54	30.0	45	32	6.8	11	17
OGA-01-25	**OGA-03-25**	25	40	51	30	22	15	40	M10	78	67	39.0	60	40	8.6	15	21
OGA-01-30	**OGA-03-30**	30	47	60	35	22	16	48	M10	87	79	43.5	68	45	8.6	15	21
OGA-01-40	**OGA-03-40**	40	62	77	45	26	20	60	M12	108	91	54.0	86	58	10.3	18	27

Please note: Installation instructions ➤ Page 1003

Are equipped with:

OJUM-01

OJUM-03

Can be combined with:

OJUM-06

DryLin® R Linear - Product range

Pillow block - Closed - Short design

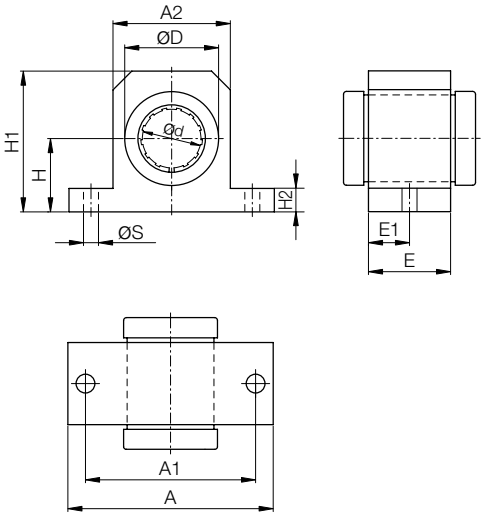

- Housing: Aluminum, equipped with DryLin® R linear plain bearings
- Variations:
  Standard: RGAS-01-Ø
  Self-aligning: RGAS-03-Ø
  Solid polymer bearing: RGAS-04-Ø
  (cost-effective, light)

Order key

Type				Options	Size
R	G	A	S	- 01	- 12
Linear Housing with RJUM bearings	Aluminum housing	Small	Standard with RJUM-01		Diameter

Options:
01: Standard with RJUM-01
03: with RJUM-03
04: with RJM-01

Dimensions [mm]

Part No.			d	D	H	H1	H2	A	A1	A2	E	E1	S
Standard	Self-aligning	Solid plastic											
with RJUM-01	with RJUM-03	with RJM-01											
RGAS-01-12	**RGAS-03-12**	**RGAS-04-12**	12	22	18	35.0	6	52	42	30	20	10	5.3
RGAS-01-16	**RGAS-03-16**	**RGAS-04-16**	16	26	22	40.5	7	56	46	34	22	11	5.3
RGAS-01-20	**RGAS-03-20**	**RGAS-04-20**	20	32	25	48.0	8	70	58	40	28	14	6.4
RGAS-01-25	**RGAS-03-25**	**RGAS-04-25**	25	40	30	58.0	10	80	68	50	40	20	6.4
RGAS-01-30	**RGAS-03-30**	**RGAS-04-30**	30	47	35	67.0	10	88	76	58	48	24	6.4
RGAS-01-40	**RGAS-03-40**	**RGAS-04-40**	40	62	45	85.0	12	108	94	74	56	28	8.4

Please note: Installation instructions ➤ Page 1003

Are equipped with:

RJUM-01

RJUM-03

RJM-01

DryLin® R Linear - Product range

Pillow block - Open - Short design

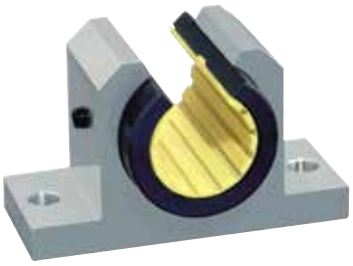

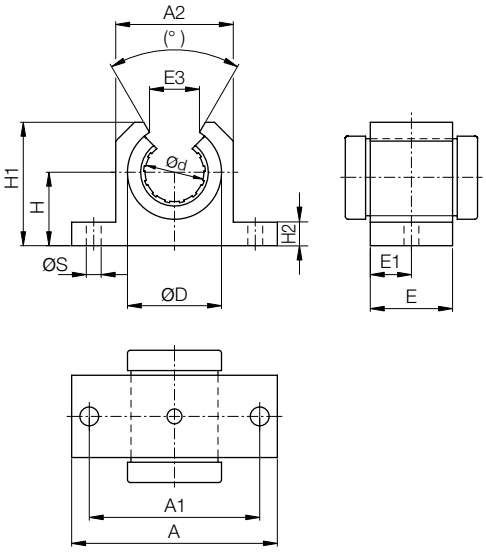

- Housing: Aluminum, equipped with DryLin® R linear plain bearings
- Variations:
  Standard: OGAS-01-Ø
  Self-aligning: OGAS-03-Ø

Order key

Type				Options	Size
O	G	A	S	- 01	- 12
Linear Housing with OJUM bearings	Aluminum housing	Small	Standard with OJUM-01		Diameter

Options:
01: Standard with OJUM-01
03: with OJUM-03

Dimensions [mm]

Part No.		d	D	H	H1	H2	A	A1	A2	E	E1	E3	(°)	S
Standard	Self-aligning													
with OJUM-01	with OJUM-03													
OGAS-01-12	**OGAS-03-12**	12	22	18	28	6	52	42	30	20	10	14	78	5.3
OGAS-01-16	**OGAS-03-16**	16	26	22	33.5	7	56	46	34	22	11	17	78	5.3
OGAS-01-20	**OGAS-03-20**	20	32	25	42	8	70	58	40	28	14	17	60	6.4
OGAS-01-25	**OGAS-03-25**	25	40	30	51	10	80	68	50	40	20	21	60	6.4
OGAS-01-30	**OGAS-03-30**	30	47	35	60	10	88	76	58	48	24	21	54	6.4
OGAS-01-40	**OGAS-03-40**	40	62	45	77	12	108	94	74	56	28	27	54	8.4

Please note: Installation instructions ➤ Page 1003

Are equipped with:

OJUM-01

OJUM-03

DryLin® R Linear - igus® testing method

igus® testing method for measuring the tolerance of DryLin® plain bearings

In order to ensure the function of the DryLin® linear plain bearing, it is necessary to use the bearing with a defined clearance. The quality control of this product line is performed with a cylinder gauge test. For this purpose, a certain force is defined, with which the cylinder gauge is loaded when the plain bearing is tested.

Part No.	Test force [N]	Øi test housing	Min. bearing Øi (c. gauge-free)	Max. bearing Øi (with c. gauge)
JUM-01/02-10	0.981	12.000 mm	10.030 mm	10.070 mm
JUM-01/02-12	1.373	14.000 mm	12.030 mm	12.070 mm
JUM-01/02-16	1.864	18.000 mm	16.030 mm	16.070 mm
JUM-01/02-20	2.649	23.000 mm	20.030 mm	20.070 mm
JUM-01/02-25	3.729	28.000 mm	25.030 mm	25.070 mm
JUM-01/02-30	4.807	34.000 mm	30.040 mm	30.090 mm
JUM-01/02-40	7.063	44.000 mm	40.040 mm	40.090 mm
JUM-01/02-50	9.810	55.000 mm	50.050 mm	50.100 mm
JUI-01-06	0.981	0.4684 Inch	0.3768 Inch	0.3776 Inch
JUI-01-08	1.373	0.5934 Inch	0.5016 Inch	0.5024 Inch
JUI-01-10	1.864	0.7184 Inch	0.6268 Inch	0.6276 Inch
JUI-01-12	2.649	0.8747 Inch	0.7516 Inch	0.7524 Inch
JUI-01-16	3.729	1.1247 Inch	1.0016 Inch	1.0024 Inch
JUI-01-20	4.807	1.4058 Inch	1.2520 Inch	1.2531 Inch
JUI-01-24	7.063	1.6558 Inch	1.5020 Inch	1.5031 Inch
JUI-01-32	9.810	2.1870 Inch	2.0024 Inch	2.0039 Inch
RJM-01-08	0.981	16.000 mm	8.025 mm	8.061 mm
RJM-01-10	0.981	19.000 mm	10.025 mm	10.061 mm
RJM-01-12	1.373	22.000 mm	12.032 mm	12.075 mm
RJM-01-16	1.864	26.000 mm	16.032 mm	16.075 mm
RJM-01-20	2.649	32.000 mm	20.040 mm	20.092 mm
RJM-01-25	3.729	40.000 mm	25.040 mm	25.092 mm
RJM-01-30	4.807	47.000 mm	30.040 mm	30.092 mm
RJM-01-40	7.063	62.000 mm	40.050 mm	40.112 mm
RJI-01-06	0.981	0.6250 Inch	0.3762 Inch	0.3776 Inch
RJI-01-08	1.373	0.8750 Inch	0.5013 Inch	0.5030 Inch
RJI-01-10	1.864	1.1250 Inch	0.6265 Inch	0.6282 Inch
RJI-01-12	2.649	1.2500 Inch	0.7516 Inch	0.7536 Inch
RJI-01-16	3.729	1.5625 Inch	1.0035 Inch	1.0056 Inch
RJI-01-20	4.807	2.0000 Inch	1.2520 Inch	1.2544 Inch
RJI-01-24	7.063	2.3750 Inch	1.5020 Inch	1.5044 Inch
RJI-01-32	9.810	3.0000 Inch	2.0024 Inch	2.0053 Inch
RJ260(U)M-02-12	1.373	19.000 mm	12.032 mm	12.084 mm
RJ260(U)M-02-16	1.864	24.000 mm	16.032 mm	16.084 mm
RJ260(U)M-02-20	2.649	28.000 mm	20.040 mm	20.100 mm
RJ260(U)M-02-25	3.729	35.000 mm	25.040 mm	25.100 mm

DryLin® R Linear - igus® testing method

Part No.	Test force [N]	Øi test housing	Min. bearing Øi (c. gauge-free)	Max. bearing Øi (with c. gauge)
TUMO-01-10	0.981	12.000 mm	9.98 mm	10.02 mm
TUM-01/02-12	1.373	14.000 mm	12.02 mm	12.06 mm
TUM-01-14	1.5	16.000 mm	14.02 mm	14.06 mm
TUM-01/02-16	1.864	18.000 mm	16.02 mm	16.06 mm
TUM-01/02-20	2.649	23.000 mm	20.03 mm	20.07 mm
TUM-01/02-25	3.729	28.000 mm	24.97 mm	25.01 mm
TUM-01/02-30	4.807	34.000 mm	29.96 mm	30.01 mm
TUM-01/02-40	7.063	44.000 mm	40.00 mm	40.05 mm

Explanation:
The iglide® T500 (X)* material has a higher stiffness than iglide® J. This causes shifts – depending on the diameter – compared to the ratio of test force to LD diameter. The parts are designed in such a way that under load the clearance between the iglide® T500 (X)* and iglide® J bearings is as identical as possible. Thereby in the use of iglide® T500 (X)* liners, increased shifting forces can occur in the unloaded new condition on an h-toleranced shaft.

When using a plain bearing (JUM/RJM) in connection with a housing (RJUM, OJUM, RGA) the factory tolerance of the housing bore (standard case: H7) is also added to the minimum clearance stated above. The total from these two values then produces the maximum possible bearing tolerance.

The effective clearance is also influenced by the shaft tolerance. The maximum shaft undersize value should be added to give the maximum possible clearance.

Fmax dynamic:
The maximum values are the result of the projected surface and 5 MPa surface pressure.

Fmax static:
The maximum values are the result of the projected surface and 35 MPa surface pressure.

Installation instructions ➤ Page 1003

Tightening torque for DryLin® connections between metal parts

Metric thread (Da)	Torque [Nm]	Recommended torque [Nm]
M4	1.0 - 2.8	1.5
M5	2.0 - 5.5	3.0
M6	4.0 - 10.0	6.0
M8	8.0 - 23.0	15.0
M10	22.0 - 46.0	30.0

Note the minimal screw in depth for aluminum and zinc parts: 1.5 x Da

*X is the European equivalent material for iglide® T500

Notes

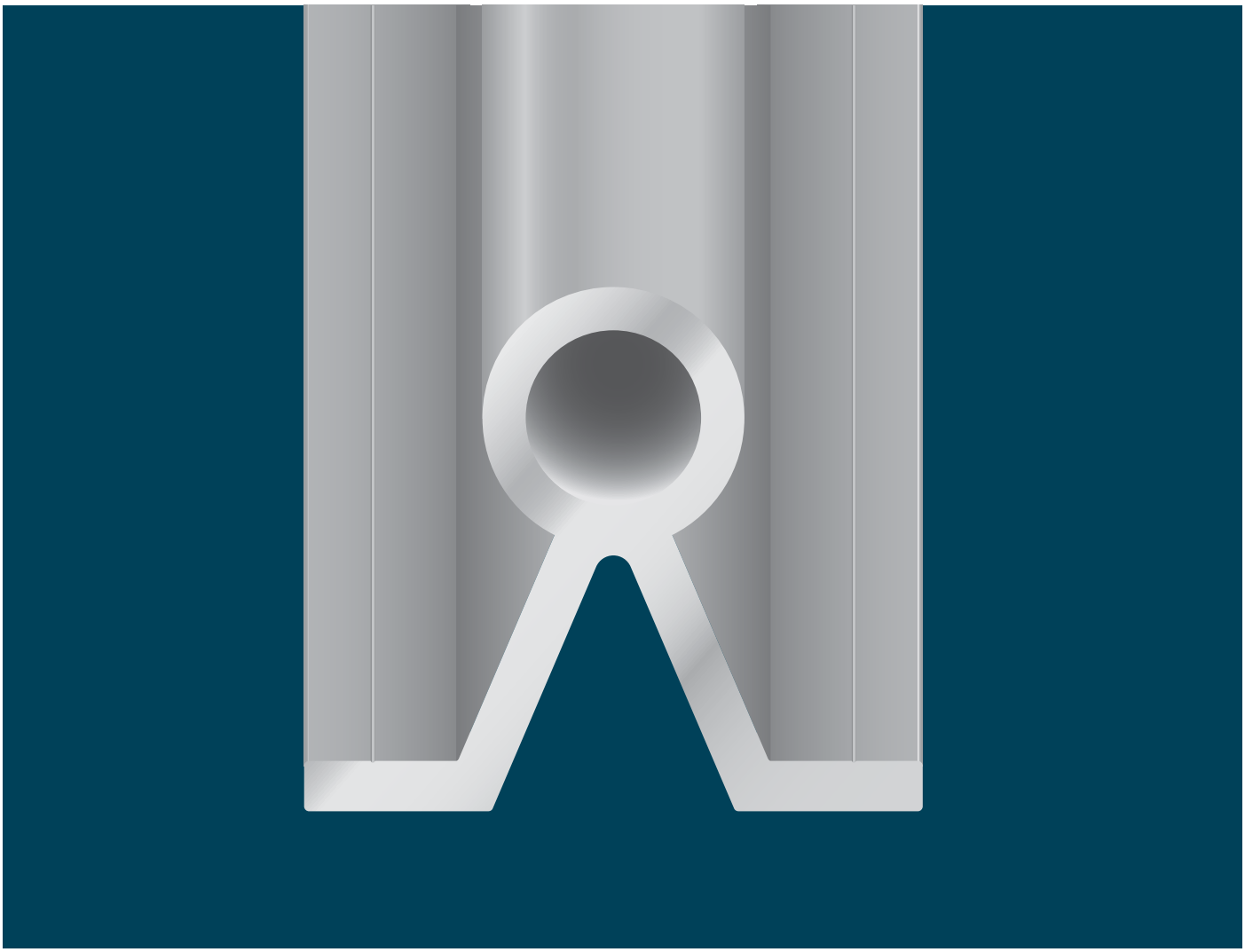

DryLin® Metric Shafting

- 8 shaft materials to choose from
- Available in supported versions
- Aluminum for low weight
- Stainless steel for high corrosion resistance
- Special machining
- Diameters 6 - 60 mm
- Please contact igus for inch steel shafting

DryLin® Shafts

	The "all-rounder" – iglide® J	The specialist – iglide® J200	The extreme – iglide® T500 (X)*	The marathon runner – iglide® E7	FDA compliant – iglide® A180
Optimal shaft material(s)	all shaft materials	Aluminum, hard anodized	Hardened stainless steel Hard chromed plated steel	Steel stainless steel shaft	all shaft materials
Application temperature	-40°F to +194°F (-40°C to +90°C)	-40°F to +194°F (-40°C to +90°C)	-148°F to +482°F (-100°C to +250°C)	-40°F to +194°F (-40°C to +90°C)	-40°F to +194°F (-40°C to +90°C)
Best coefficient of friction with	Steel shaft	Aluminum, hard anodized	Steel, hard chrome-plated, SS	Steel stainless steel shaft	Stainless steel shaft
Maximum life time	Aluminum, hard anodized	Aluminum, hard anodized	Hardened stainless steel	Steel stainless steel shaft	Stainless steel shaft
Permissible stat. surface pressure	35 MPa	23 MPa	150 MPa	18 MPa	28 MPa
Moisture absorption	1.3% weight	0.7% weight	0.5% weight	< 0.1% weight	0.2% weight
Volume resistance	> 10^{13} Ωcm	> 10^{8} Ωcm	< 10^{5} Ωcm	> 10^{9} Ωcm	> 10^{12} Ωcm
Part No.	JUM-...	J200UM-...	TUM-.../XUM-...	E7UM-...	A180UM-...

Available shaft materials:

Aluminum

- Ideal in combination with liners made from iglide® J/J200
- Lightweight
- Lower wear
- Corrosion resistant
- Available from stock

Steel

- Ideal with E7 liner
- Low-priced standard
- High load capacity
- Dry area applications
- Hard chrome-plated also available
- Lower coefficient of friction against plastic bearings

Stainless steel

- Ideal with E7 liner
- High corrosion resistance
- High chemical resistance
- Ideal solution for wet applications
- 300 series for extremely chemical intensive applications

Please remember that this is a technical surface.
Small color variations are possible due to variable coating depths.

Wear

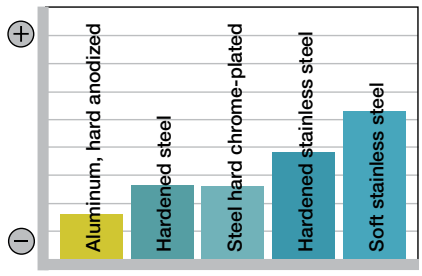

iglide ®J against particular shaft materials

Coefficient of friction

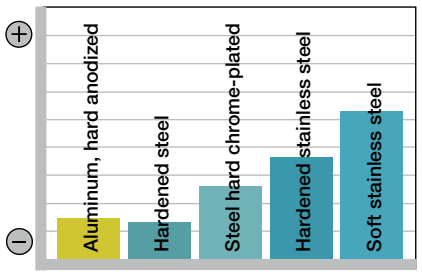

iglide ®J against particular shaft materials

Corrosion

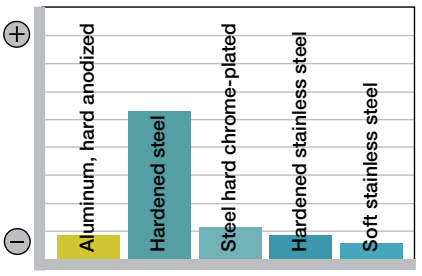

iglide ®J against particular shaft materials

Weight

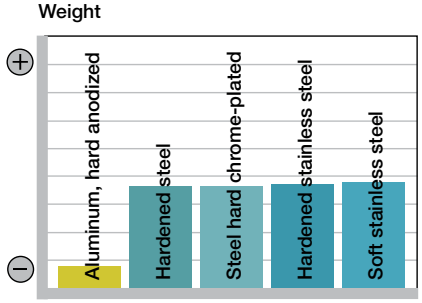

Costs

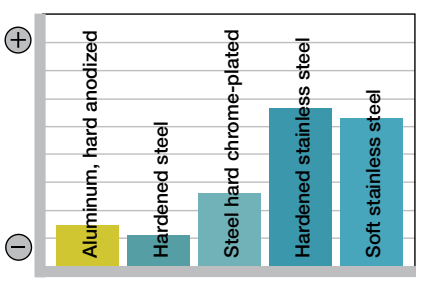

Chemical contamination

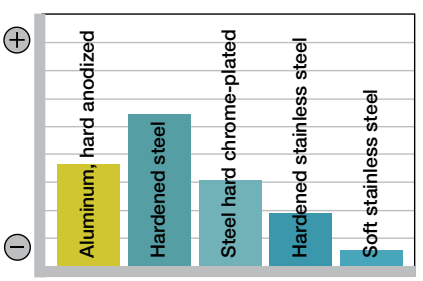

*X is the European equivalent material for iglide® T500

DryLin® Shafts - Product Range

	Aluminum			Steel				Hardened stainless steel				Soft stainless		Carbon fiber
Marking				SWUM		SWUMH		EWUM		EEWUM		EWUMS		CWM
	AWM	AWUM	AWMR	SWM	SWUMN	SWMH	SWUMHN	EWM	EWUMN	EEWM	EEWUMN	EWMR	EWMS	
Material	EN AW 6061/6060/6063			Case hardened (1.1213)		Hard Chromed (1.1213 HV)		440C (1.4125)		420C (1.4034)		304 (1.4301)	316 (1.4571)	CFK Composite
Ø 6	●			▲		▲		▲[2]		▲				
Ø 8	●			▲		▲		▲[2]		▲				
Ø 10	●	●		▲		▲		▲[2]		▲		▲	▲	
Ø 12	●	●	●	▲	▲	▲	▲	▲	▲	▲	▲	▲	▲	▲
Ø 16	●	●	●	▲	▲	▲	▲	▲	▲	▲	▲	▲	▲	▲
Ø 20	●	●	●	▲	▲	▲	▲	▲	▲	▲	▲	▲	▲	▲
Ø 25	●	●	●	▲	▲	▲	▲	▲	▲	▲	▲	▲	▲	
Ø 30	●[1]	●		▲	▲	▲	▲	▲	▲	▲	▲	▲	▲	▲
Ø 40	●[1]	●		▲	▲	▲	▲	▲	▲	▲				
Ø 50	●[1]			▲	▲	▲	▲	▲	▲	▲	▲			
Ø 60	●[1]													

Ø Tolerance	h8	–0.1	h9	h6	h6	h7	h7	h6	h6	h6	h6	h9	h9	-0.1 mm
Max. supply length Ø 8–10	3,000			3,000		3,000		3,000		3,000				2,000
Max. supply length Ø 12–50	3,000	4,000	3,000	6,000	6,000	6,000	6,000	6,000	6,000	6,000	6,000	3,000	3,000	2,000
Surface	Hard anodized			Hardened/ ground		Hard chrome-plated		Hardened/ ground		Hardened/ ground		Drawn, polished		UCU unidirectional/ cross winding/ unidirectional
Surface roughness Ra	< 0.6			0.15–0.3		0.15–0.3		0.15–0.3		0.15–0.3		0.3–0.6		< 0.6 µm
Hardness	450–550 HV			60+4 HRC		60+4 HRC		52+8 HRC		52+8 HRC		not hardened		
Roundness	≤ 1/2 ø Tolerance			≤ 1/2 ø Tolerance		≤ 1/2 ø Tolerance		≤ 1/2 ø Tolerance		≤ 1/2 ø Tolerance		≤ 1/2 ø Tolerance		± 0.05 mm

Delivery time: ● from stock ▲ 3–8 days; machined 12 days [1] Hollow profile [2] Material 440B (1.4112)

ISO Tolerances for Shafts (ISO 286-2)

	Nominal Shaft Size (mm)						
Over	3	6	10	18	30	40	50
Including	6	10	18	30	40	50	65
h6	+0/-0.008	+0/-0.009	+0/-0.011	+0/-0.013	+0/-0.016	+0/-0.016	+0/-0.019
h7	+0/-0.012	+0/-0.015	+0/-0.018	+0/-0.021	+0/-0.025	+0/-0.025	+0/-0.030
h8	+0/-0.018	+0/-0.022	+0/-0.027	+0/-0.033	+0/-0.039	+0/-0.039	+0/-0.046
h9	+0/-0.030	+0/-0.036	+0/-0.043	+0/-0.052	+0/-0.062	+0/-0.062	+0/-0.074
h10	+0/-0.048	+0/-0.058	+0/-0.070	+0/-0.084	+0/-0.100	+0/-0.100	+0/-0.120

Special machining
All shafts can be individually machined. Please send us your drawing. We can then provide a quotation quickly.

Inch dimensions available in most materials. Please contact igus® for more information.

DryLin® Shafts - Product range

Precision aluminum shafts

- The recommended shaft material for all linear plain bearings made from iglide® J and iglide® J200
- Material: EN AW 6061/6060
- Straightness: EN 754-3v
- Hardness: 75 HB
- Surface: hard anodized
- Surface hardness: 450-550 HV
- Due to the technical surface finish slight color variations may occur between shafts

Order key

Type		Size	Options
A	W	M* - 06	- 2000
Aluminum shaft	Metric	Outer Ø	Shaft length [mm]

AWM: Solid shaft up to Ø 25 mm
hollow shaft from Ø 30 mm
AWMR: Tube

Hard anodized surfaces
➤ Page 888

Dimensions [mm]

Part No.	Design	Outer Ø	Tolerance	Insulation thickness	Inner Ø	Max. length	Weight [kg/m]
AWM-06	Solid shaft	6	h8	–	–	3,000	0.08
AWM-08	Solid shaft	8	h8	–	–	3,000	0.14
AWM-10	Solid shaft	10	h8	–	–	3,000	0.22
AWM-12	Solid shaft	12	h8	–	–	3,000	0.32
AWM-16	Solid shaft	16	h8	–	–	3,000	0.56
AWM-20	Solid shaft	20	h8	–	–	3,000	0.88
AWM-25	Solid shaft	25	h8	–	–	3,000	1.37
AWM-30	Hollow shaft	30	h8	7.5	15	3,000	1.48
AWM-40	Hollow shaft	40	h8	10	20	3,000	2.63
AWM-50	Hollow shaft	50	h8	11	28	3,000	3.75
AWM-60	Hollow shaft	60	h8	11	38	3,000	4.7

*AWMP is the European part number equivalent for AWM

Part No.	Design	Outer Ø	Tolerance	Insulation thickness	Inner Ø	Max. length	Weight [kg/m]
AWMR-12	Tube	12	h8	2	8	3,000	0.17
AWMR-16	Tube	16	h8	2	12	3,000	0.25
AWMR-20	Tube	20	h9	2	16	3,000	0.32
AWMR-25	Tube	25	h9	3	19	3,000	0.59

Order example:
AWM-12-500 corresponds to a precision aluminum shaft Ø 12 mm, 500 mm in length

DryLin® Shafts - Product range

Supported aluminum shaft

Order key

Type	Size	Options
A W U M*	- 12	- 2000
Aluminum shaft	Supported	Metric	Outer Ø	Shaft length [mm]

- Material: EN AW 6061/6060
- Straightness: DIN 12020
- Hardness: 75 HB
- Surface: hard anodized
- Hardness: 450-550 HV
- Hole pitches symmetrical C5 = C6
- Due to the technical surface finish slight color variations may occur between shafts

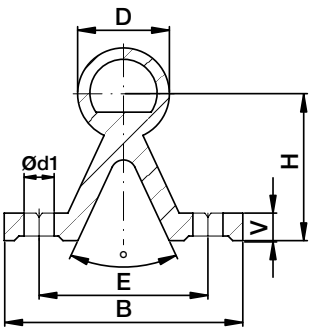

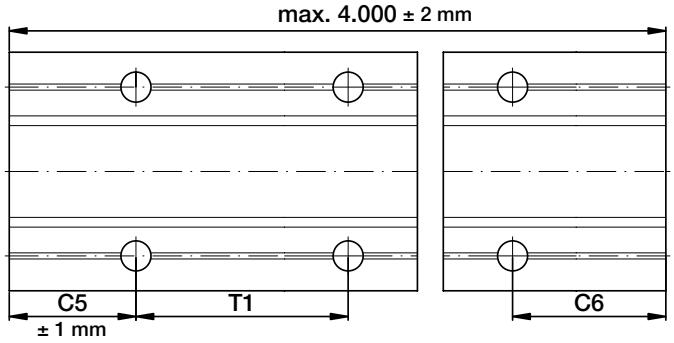

Hard anodized surfaces
➤ Page 888

Dimensions [mm]

Part No.	D	B	H	V	d1	(°)	E	T1	C5/C6		Max. length	Weight
	–0.1		±0.25				±0.25		min.	max.		[kg/m]
AWUM-12	12	40	22	5	4.5	50	29	75	20	57	4,000	0.75
AWUM-16	16	45	26	5	5.5	50	33	100	20	69	4,000	1.00
AWUM-20	20	52	32	6	6.6	50	37	100	20	69	4,000	1.42
AWUM-25	25	57	36	6	6.6	50	42	120	20	79	4,000	1.81
AWUM-30	30	69	42	7	9.0	50	51	150	20	94	4,000	2.69
AWUM-40[86)]	40	73	50	8	9.0	50	55	200	20	119	4,000	4.06

[86)] Tolerance for shaft diameter D is –0.15

*AWMU is the European part number equivalent for AWUM

Order example:
AWUM*-16-500 corresponds to a supported aluminum shaft Ø 16 mm, 500 mm in length

DryLin® Shafts - Product range

Standard steel shafts

- Materials available
  1050 Case Hardened Steel
  1050 Case Hardened
  Chrome-plated Steel
- Available supported or unsupported
- Max undersupport rail length - 600 mm
- T2 hole spacing standard
  T1 optional
- Symmetric hole pattern C5 = C6
- Inch dimensions available - contact igus®

Order key

Type		Size	Options
S	W	M	- 06 - 2000
Steel shaft		Metric	Outer Ø / Shaft length [mm]

- For supported shafts:
  - ➤ Shaft support supplied in lengths of 600 mm max.
  - ➤ Standard pitch T2, T1 also possible on request
  - ➤ Hole pitches symmetrical C5 = C6

Dimensions [mm] – 1050 steel shafting (1.1213)

Part No.	d	Weight [kg/m]	Max. length	Effective hardness depth (with 1.1213)
SWM-06	06	0.222	3,000	0.8
SWM-08	08	0.359	4,000	0.9
SWM-10	10	0.617	4,000	0.9
SWM-12	12	0.888	6,000	1.0
SWM-16	16	1.578	6,000	1.2
SWM-20	20	2.466	6,000	1.6
SWM-25	25	3.853	6,000	1.8
SWM-30	30	5.549	6,000	2.0
SWM-40	40	9.865	6,000	2.2
SWM-50	50	15.413	6,000	2.4

Dimensions [mm] – hard chromed 1050 steel shafting (1.1213)

Part No.	d	Weight [kg/m]	Max. length	Effective hardness depth (with 1.1213)
SWMH-06	06	0.222	3,000	0.8
SWMH-08	08	0.359	4,000	0.9
SWMH-10	10	0.617	4,000	0.9
SWMH-12	12	0.888	6,000	1.0
SWMH-16	16	1.578	6,000	1.2
SWMH-20	20	2.466	6,000	1.6
SWMH-25	25	3.853	6,000	1.8
SWMH-30	30	5.549	6,000	2.0
SWMH-40	40	9.865	6,000	2.2
SWMH-50	50	15.413	6,000	2.4

Order example:

SWM-16-500 corresponds to a steel shaft 16 mm Ø 1050 steel (1.1213), 500 mm in length

DryLin® Shafts - Product range

Supported steel shaft

SWUM

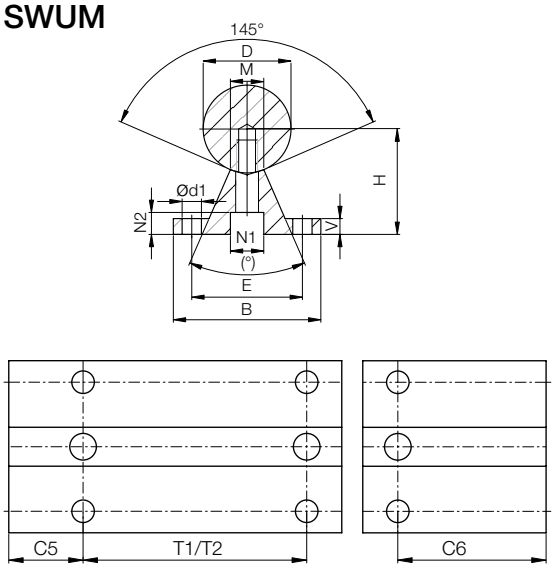

SWUMN

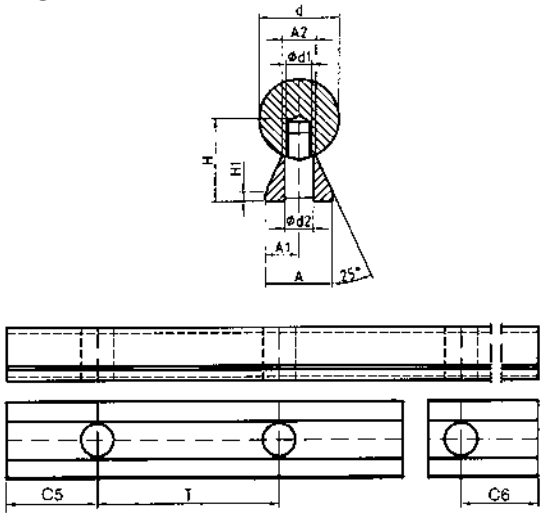

Dimensions [mm] – supported 1050 steel shafting (1.1213)

Part No.	D	B	H	V	N1	N2	d1	M	(°)	E	T1[87]	C5/C6		T2	C5/C6		Weight
			±0.02								±0.15	min. for T1	max. for T1	Standard	min. for T2 Standard	max. for T2 Standard	[kg/m]
SWUM-12	12	40	22	5	8.0	5.0	4.5	5.8	50	29	75	20	57	120	20	79	1.75
SWUM-16	16	45	26	5	9.5	6.0	5.5	7.0	50	33	100	20	69	150	20	94	2.64
SWUM-20	20	52	32	6	11.0	6.5	6.6	8.3	50	37	100	20	69	150	20	94	3.97
SWUM-25	25	57	36	6	14.0	8.5	6.6	10.8	50	42	120	20	79	200	20	119	5.65
SWUM-30	30	69	42	7	17.0	10.5	9.0	11.0	50	51	150	20	94	200	20	119	7.93
SWUM-40	40	73	50	8	17.0	10.5	9.0	15.0	50	55	200	20	119	300	20	169	12.88
SWUM-50	50	84	60	9	19.0	12.5	11.0	19.0	46	63	200	20	119	300	20	169	19.60

[87] Pitch T1 on request; standard is T2

Dimensions [mm] – supported 1050 steel shafting (1.1213)

Part No.	d	H	H1	A	A1	A2	d1	d2	T	C5/C6		Weight
			±0.02			±0.02				min.	max.	[kg/m]
SWUMN-12	12	14.5	3	11	5.5	5.4	M4	4.5	75	20	57	1.62
SWUMN-16	16	18	3	14	7.0	7.0	M5	5.5	75	20	57	2.54
SWUMN-20	20	22	3	17	8.5	8.1	M6	6.6	75	20	57	3.81
SWUMN-25	25	26	3	21	10.5	10.3	M8	9.0	75	20	57	5.62
SWUMN-30	30	30	3	23	11.5	11.0	M10	11.0	100	20	69.5	7.63
SWUMN-40	40	39	4	30	15.0	15.0	M12	13.5	100	20	69.5	13.47
SWUMN-50	50	46	5	35	17.5	19.0	M14	15.5	100	20	69.5	20.31

Low level supported shafts are delivered unassembled.

Order example:

SWUM-16-500 corresponds to a supported steel shaft 16 mm ø made from 1050 steel (1.1213), 500 mm in length

DryLin® Shafts - Product range

Stainless steel shafts

DryLin® STAINLESS STEEL

- Completely supported and mounted with standard aluminum support
- Inch dimensions available - contact igus®

- For supported shafts:
  - ➤ Shaft support supplied in lengths of 600 mm max.
  - ➤ Standard pitch T2, T1 also possible on request
  - ➤ Hole pitches symmetrical C5 = C6

Dimensions [mm] – hardened stainless steel 440C (1.4125)

Part No.	d	Weight [kg/m]	Max. length	Effective hardness depth with 440C (1.4125)
EWM-06[88)]	06	0.222	3,000	0.8
EWM-08[88)]	08	0.359	4,000	0.9
EWM-10[88)]	10	0.617	4,000	0.9
EWM-12	12	0.888	6,000	1.0
EWM-16	16	1.578	6,000	1.2
EWM-20	20	2.466	6,000	1.6
EWM-25	25	3.853	6,000	1.8
EWM-30	30	5.549	6,000	2.0
EWM-40	40	9.865	6,000	2.2
EWM-50	50	15.413	6,000	2.4

[88)] Material SAE 1084 (1.4112)

DryLin® Shafts - Product range

Stainless materials 440C (1.4125), 420C (1.4034), 304 (1.4301), 316 (1.4571)

Order key

Type		Size	Options
E	W M	- 06	- 2000
Steel shaft	Metric	Outer Ø	Shaft length [mm]

Available shaft materials:
Stainless steel 440C (1.4125 or 1.4112), hardened/ground ➤ EWM
Stainless steel 420C (1.4034), hardened/ground ➤ EEWM
Stainless steel 304 (1.4301), drawn ➤ EWMR
Stainless steel 316 (1.4571), drawn ➤ EWMS

Dimensions [mm] – hardened stainless steel 420C (1.4034)

Part No.	d	Weight [kg/m]	Max. length	Effective hardness depth with 420C (1.4034)
EEWM-06	06	0.222	3,000	0.8
EEWM-08	08	0.359	4,000	0.9
EEWM-10	10	0.617	4,000	0.9
EEWM-12	12	0.888	6,000	1.0
EEWM-16	16	1.578	6,000	1.2
EEWM-20	20	2.466	6,000	1.6
EEWM-25	25	3.853	6,000	1.8
EEWM-30	30	5.549	6,000	2.0
EEWM-40	40	9.865	6,000	2.2
EEWM-50	50	15.413	6,000	2.4

Dimensions [mm] – 304 stainless steel (1.4301) - EWMR, or 316 soft stainless steel (1.4571) - EWMS

Part No.	d	Weight [kg/m]	Max. length
EWMR-10	10	0.617	4,000
EWMS-10	10	0.617	4,000
EWMR-12	12	0.888	6,000
EWMR-16	16	1.578	6,000
EWMR-20	20	2.466	3,000
EWMS-20	20	2.466	6,000
EWMR-25	25	3.853	6,000
EWMR-30	30	5.549	6,000

Order example:
EWM-16-500 corresponds to a stainless steel shaft 16 mm Ø 440C (1.4125), 500 mm in length

DryLin® Shafts - Product range

Supported stainless steel shafts

EWUM

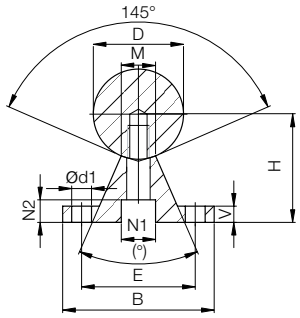

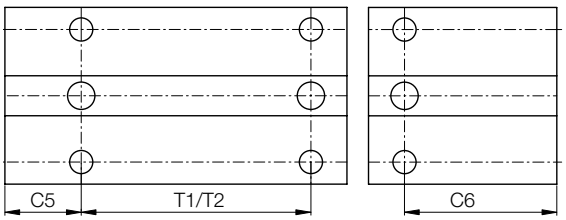

EWUMN

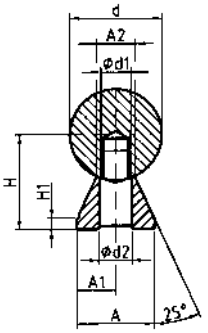

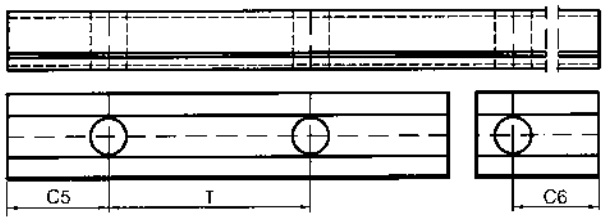

DryLin® STAINLESS STEEL

Dimensions [mm] – supported 440C stainless steel shafts (1.4125)

Part No.	D	B	H	V	N1	N2	d1	M	(°)	E	T1[87]	C5/C6		T2	C5/C6		Weight
												min.	max.	for T2	min.	max.	
			±0.02								±0.15	for T1		Standard	Standard		[kg/m]
EWUM-12	12	40	22	5	8.0	5.0	4.5	5.8	50	29	75	20	57	120	20	79	1.75
EWUM-16	16	45	26	5	9.5	6.0	5.5	7.0	50	33	100	20	69	150	20	94	2.64
EWUM-20	20	52	32	6	11.0	6.5	6.6	8.3	50	37	100	20	69	150	20	94	3.97
EWUM-25	25	57	36	6	14.0	8.5	6.6	10.8	50	42	120	20	79	200	20	119	5.65
EWUM-30	30	69	42	7	17.0	10.5	9.0	11.0	50	51	150	20	94	200	20	119	7.93
EWUM-40	40	73	50	8	17.0	10.5	9.0	15.0	50	55	200	20	119	300	20	169	12.88
EWUM-50	50	84	60	9	19.0	12.5	11.0	19.0	46	63	200	20	119	300	20	169	19.60

[87] Pitch T1 on request; standard is T2

Dimensions [mm] – low level supported 440C stainless steel shafts (1.4125)

Part No.	d	H	H1	A	A1	A2	d1	d2	T	C5/C6		Weight
		±0.02				±0.02				min.	max.	[kg/m]
EWUMN-12	12	14.5	3	11	5.5	5.4	M4	4.5	75	20	57	1.62
EWUMN-16	16	18	3	14	7.0	7.0	M5	5.5	75	20	57	2.54
EWUMN-20	20	22	3	17	8.5	8.1	M6	6.6	75	20	57	3.81
EWUMN-25	25	26	3	21	10.5	10.3	M8	9.0	75	20	57	5.62
EWUMN-30	30	30	3	23	11.5	11.0	M10	11.0	100	20	69.5	7.63
EWUMN-40	40	39	4	30	15.0	15.0	M12	13.5	100	20	69.5	13.47
EWUMN-50	50	46	5	35	17.5	19.0	M14	15.5	100	20	69.5	20.31

Narrow shaft supports are delivered unassembled.

Order example:
EWUMN-16-500 corresponds to a low level supported 440C stainless steel shaft (1.4125) 16 mm Ø, with length of 500 mm

DryLin® Shafts - Product range

Partially supported stainless steel shafts

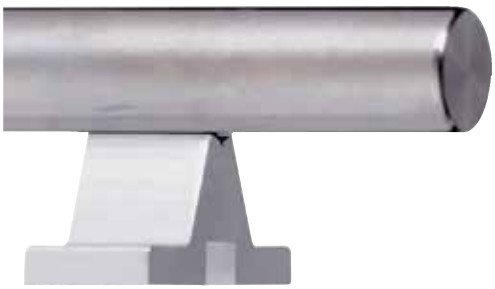

DryLin® STAINLESS STEEL

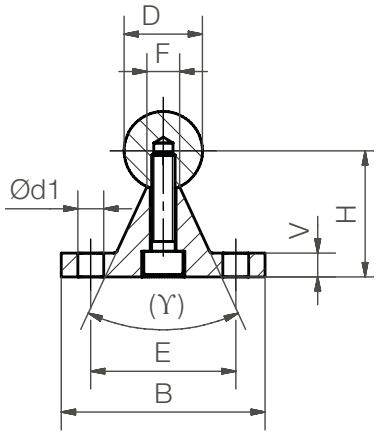

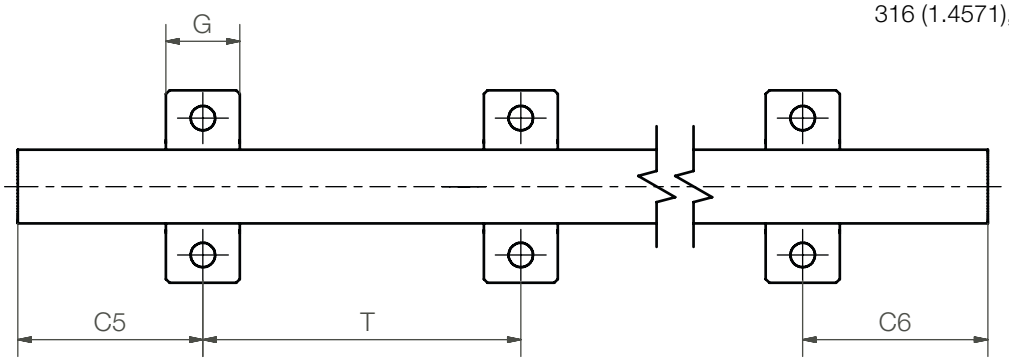

Order key

Type								Size	Length
EW	U	M	□	-	ES	-	20	-	2000
Stainless steel shafts	Supported	Metric	Blank = 440C stainless S = 316 Stainless		300 series Stainless Shaft support			Outer Ø	Shaft length [mm] (hole pattern)

Shaft support blocks for Ø 20 mm made from stainless steel 300 series SS

- Connecting dimensions as standard supports made from aluminum

Available materials and shafts:

440C (1.4125), max. 6.000 mm ➤ EWUM
316 (1.4571), max. 3.000 mm ➤ EWUMS

Dimensions [mm]

Part No. 440C (1.4125) Hard stainless	Part No. 316 (1.4571) Soft stainless	D h6	B	H ±0.02	V	d1	E	ϒ	F	G	T1	C5/C6 for T1 min.	C5/C6 for T1 max.	T2 Standard	C5/C6 for T2 min.	C5/C6 for T2 max.
EWUM-ES-12	**EWUMS-ES-12**	12	40	22	5	4.5	29	–	5.8	14	75	20	57	120	20	79
EWUM-ES-16	**EWUMS-ES-16**	16	45	26	5	5.5	33	–	7.0	16	100	20	69	150	20	94
EWUM-ES-20	**EWUMS-ES-20**	20	52	32	6	6.6	37	50°	8.3	20	100	20	69	150	20	94
EWUM-ES-25	**EWUMS-ES-25**	25	57	36	6	6.6	42	–	10.8	25	150	20	79	200	20	119
EWUM-ES-30	**EWUMS-ES-30**	30	69	42	7	9.0	51	–	11.0	25	150	20	94	200	20	119
EWUM-ES-40	**EWUMS-ES-40**	40	73	50	8	9.0	55	–	15.0	25	200	20	119	300	20	169

Cutting T2 = standard, T1 on request

Order example:
EWUM-ES-20-500 for a partially supported stainless steel shaft, cutting T2 = standard , outer Ø 20 mm with length of 500 mm

DryLin® Shafts - Product range

Carbon fiber shaft

- Material: CFK Composite
- Roundness tolerance: ± 0.05 mm
- Diameter tolerance: - 0.1 mm
- Application temperature: max. +80 °C
- Color: Black

Order key

Type		Size	Options
C	W M	- 12	- 1000
Carbon fiber shaft	Metric	Outer Ø	Shaft length [mm]

Dimensions [mm]

Part No.	Design	Diameter –0.1	Max. length	Weight [g]
CWM-12	Hollow shaft	12/9	2,000 mm	70
CWM-16	Hollow shaft	16/12.5	2,000 mm	120
CWM-20	Hollow shaft	20/16	2,000 mm	170
CWM-30	Hollow shaft	30/26	2,000 mm	270

Order example:
CWM-16, 500 corresponds to a carbon fiber shaft Ø 16 mm, 500 mm in length

DryLin® Shafts - Product range

Shaft end support, floating

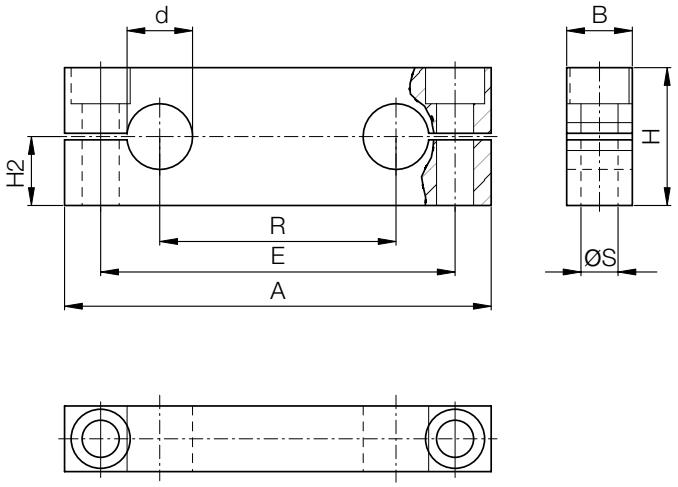

Order key

Type	Size
T A	- 08

Shaft end support, floating

Inner Ø

Material: Aluminum
Threaded fixing hole

Dimensions [mm]

Part No.	d	A	B	H	H2 ±0.015	ø S	E	R	Weight [g]
TA-08	8	65	12	22	11	M5	52	32	40
TA-10	10	70	12	21	10.5	M5	55	24	37
TA-12	12	85	14	28	14	M6	70	42	70
TA-16	16	100	18	32	16	M8	82	54	130
TA-20	20	130	20	42	21	M10	108	72	220
TA-25	25	160	25	52	26	M12	132	88	440
TA-30	30	180	25	58	29	M12	150	96	560
TA-40	40	230	30	72	36	M16	190	122	1,000

Order example:
TA-10 for a floating shaft end support with inner Ø 10 mm

DryLin® Shafts - Product range

Shaft end support, fixed

Order key

Type	Size
T A F	- 08

Shaft end support | Fixed | Inner Ø

Material: Aluminum
Mounting hole

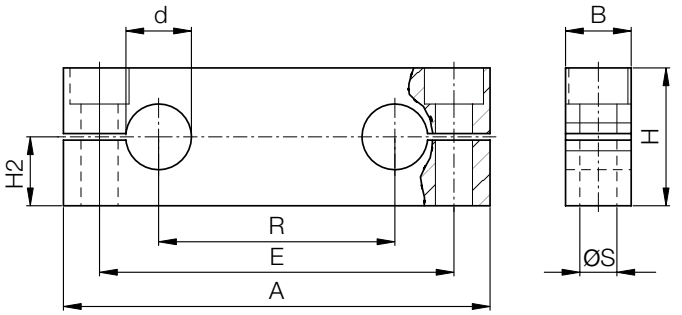

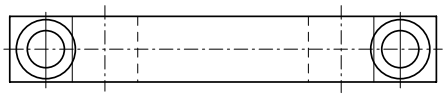

Dimensions [mm]

Part No.	d	A	B	H	H2 ±0.015	ø S	E	R	Weight [g]
TAF-08	8	65	12	23	12.5	5.5	52	32	40
TAF-10	10	70	12	25	14.0	5.5	55	24	45
TAF-12	12	85	14	32	18.0	6.6	70	42	90
TAF-16	16	100	18	36	20.0	9.0	82	54	140
TAF-20	20	130	20	46	25.0	11.0	108	72	250
TAF-25	25	160	25	56	30.0	13.5	132	88	470
TAF-30	30	180	25	64	35.0	13.5	150	96	620
TAF-40	40	230	30	80	44.0	17.5	190	122	1,150

Order example:
TAF-12 for a fixed shaft end support with inner Ø 12 mm

DryLin® Shafts - Product range

Shaft end block, standard version

Order key

Type	Size
W A	- 08

Shaft end block
Standard version

Inner Ø

Material: Aluminum

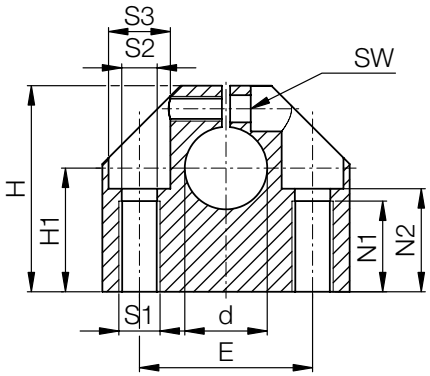

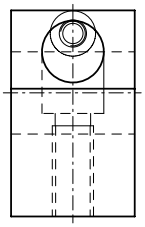

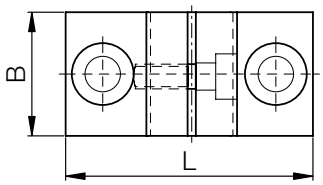

Dimensions [mm]

Part No.	d	B	H	H1 ±0.02	L	S1	S2	S3	E ±0.1	N1	N2	SW	Weight [g]
WA-08	8	18	28	15	32	M4	3.3	6	22	9	13.0	2.5	40
WA-12	12	20	35	20	43	M6	5.2	10	30	13	16.5	3.0	100
WA-16	16	24	42	25	53	M8	6.8	11	38	18	21.0	4.0	150
WA-20	20	30	50	30	60	M10	8.6	15	42	22	25.0	5.0	230
WA-25	25	38	60	35	78	M12	10.3	18	56	26	30.0	6.0	410
WA-30	30	40	70	40	87	M12	10.3	18	64	26	34.0	6.0	530
WA-40	40	48	90	50	108	M16	14.25	20	82	34	44.0	8.0	990
WA-50	50	58	105	60	132	M20	17.5	26	100	43	49.0	10.0	1,250
WA-60	60	74	130	75	164	M27	22	33	124	43	59.0	10.0	2,950

Order example:
WA-08 for a shaft block, standard design with inner Ø 8 mm

DryLin® Shafts - Product range

Shaft end block, compact version

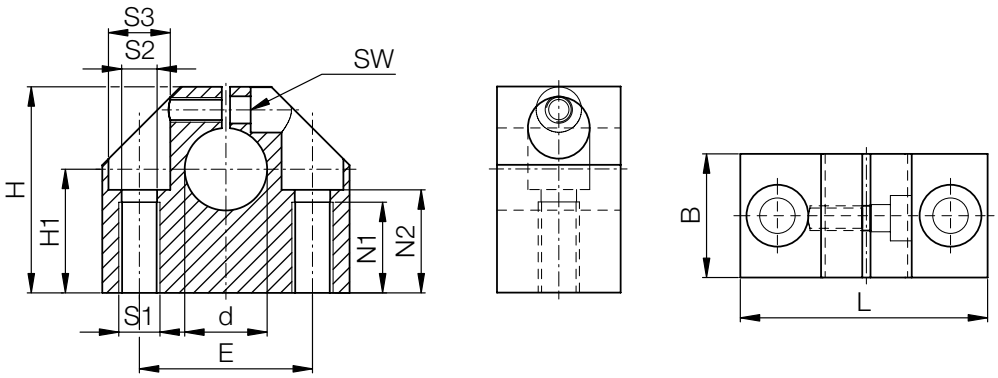

Order key

Type	Size
W A C	- 06

Shaft end block	Compact version	Inner Ø

Material: Aluminum

Dimensions [mm]

Part No.	d	B	H	H1 +0.01 up to +0.02	L	S1	S2	S3	E ±0.1	N1	N2	SW	Weight [g]
WAC-06	6	16	27	15	32	M5	4.2	8	22	11	13	2.5	30
WAC-08	8	16	27	16	32	M5	4.2	8	22	11	13	2.5	30
WAC-10	10	18	33	18	40	M6	5.2	10	27	13	16	3.0	50
WAC-12	12	18	33	19	40	M6	5.2	10	27	13	16	3.0	50
WAC-14	14	20	38	20	45	M6	5.2	10	32	13	18	3.0	70
WAC-16	16	20	38	22	45	M6	5.2	10	32	13	18	3.0	70
WAC-20	20	24	45	25	53	M8	6.8	11	39	18	22	4.0	120
WAC-25	25	28	54	31	62	M10	8.6	15	44	22	26	5.0	170
WAC-30	30	30	60	34	67	M10	8.6	15	49	22	29	5.0	220
WAC-40	40	40	76	42	87	M12	10.3	18	66	26	38	6.0	480
WAC-50	50	50	92	50	103	M16	14.25	20	80	34	46	8.0	820

Order example:
WAC-12 for a shaft block, compact design with inner Ø 12 mm

DryLin® Shafts - Product range

Shaft end block, narrow version

Order key

Type	Size
W A S	- 08

Shaft end block
Narrow version
Inner Ø

Material: Aluminum

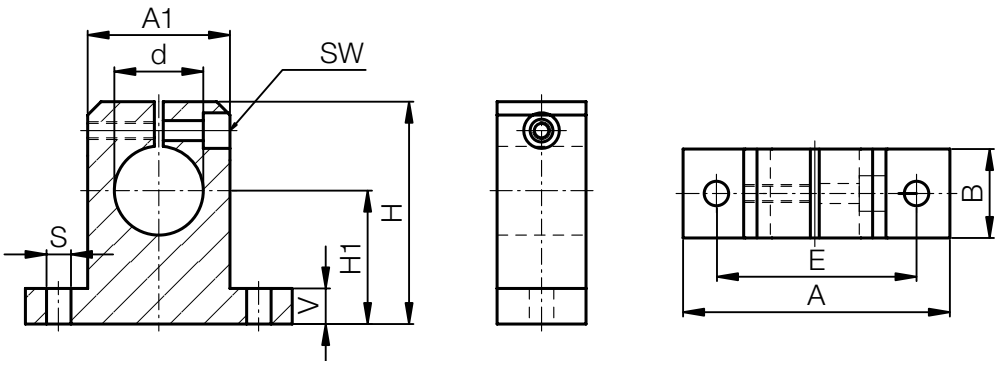

Dimensions [mm]

Part No.	d	H	H1 ±0.02	A	A1	B	E	S	V	SW	Weight [g]
WAS-08	8	27	15	32	16	10	25	4.5	5.0	2.5	12
WAS-12	12	35	20	42	20	12	32	5.5	5.5	3.0	23
WAS-16	16	42	25	50	26	16	40	5.5	6.5	3.0	35
WAS-20	20	50	30	60	32	20	45	5.5	8.0	4.0	67
WAS-25	25	58	35	74	38	25	60	6.6	9.0	4.0	140
WAS-30	30	68	40	84	45	28	68	9.0	10.0	5.0	200
WAS-40	40	86	50	108	56	32	86	11.0	12.0	6.0	480

Order example:
WAS-12 for a shaft block, narrow design with inner Ø 12 mm

DryLin® Shafts - Product range

Flanged shaft end block

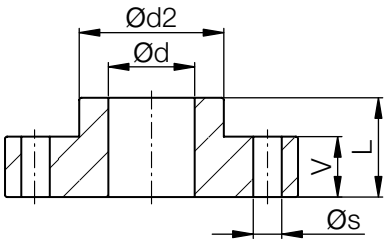

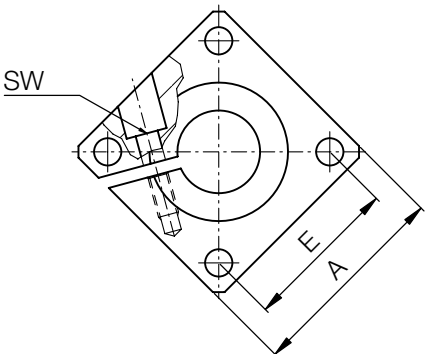

Order key

Type	Size
W A F -	12

Shaft end block | With flange | Inner Ø

Material: Aluminum

Dimensions [mm]

Part No.	Ø d	A	L	Ø d2	E	Ø s	V	SW	Weight [g]
WAF-12	12	40	20	23.5	30 ± 0.12	5.5	12	3	60
WAF-16	16	50	20	27.5	35 ± 0.12	5.5	12	3	80
WAF-20	20	50	23	33.5	38 ± 0.15	6.6	14	4	100
WAF-25	25	60	25	42.0	42 ± 0.15	6.6	16	5	150
WAF-30	30	70	30	49.5	54 ± 0.15	9.0	19	6	300
WAF-40	40	100	40	65.0	68 ± 0.25	11.0	26	8	700
WAF-50	50	100	50	75.0	75 ± 0.25	11.0	36	8	1,200

Order example:

WAF-16 for a flanged shaft block with inner Ø 16 mm

DryLin® Shafts - Product range

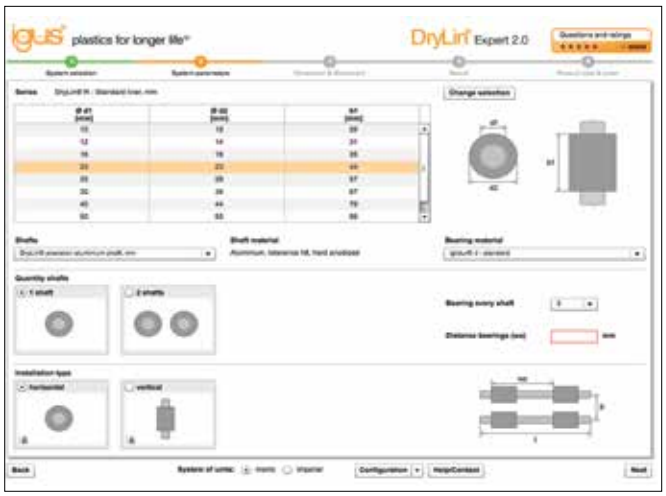

Configure and calculate linear bearings

Easily calculate and configure the service life of your required linear guide with only a few clicks. Select “DryLin® R” system and add the relevant environmental parameters. The performance and service life of the required bearing/shaft combination are quickly calculated.

➤ **www.igus.com/DryLin-expert**

DryLin® Shafts - Application examples

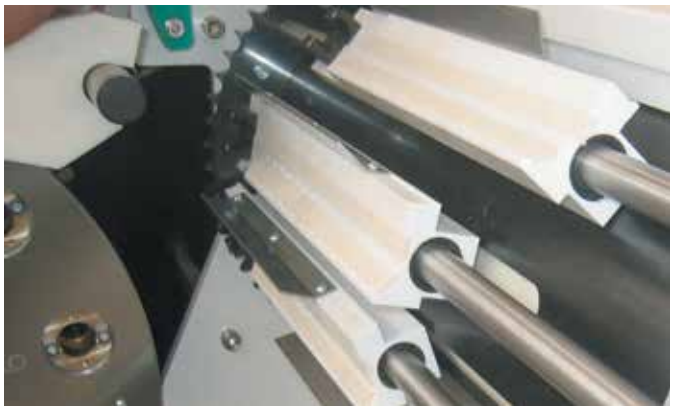

Aluminum shafts with iglide® J allow high speeds due to the low weight of the system.

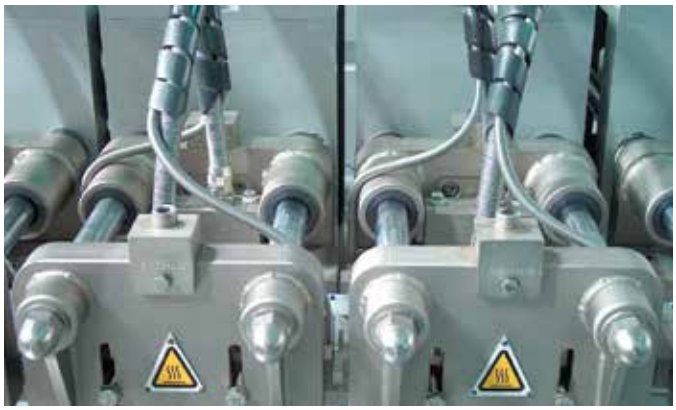

Stainless steel shafts combined with iglide® T500 (X)*, offer maximum resistance at 248°F (+120°C). Cleaning in filling machine.

Stainless steel combined with iglide® J in a cut-off grinding machine. DryLin® is resistant to the grinding particles and coolants in the extreme conditions.

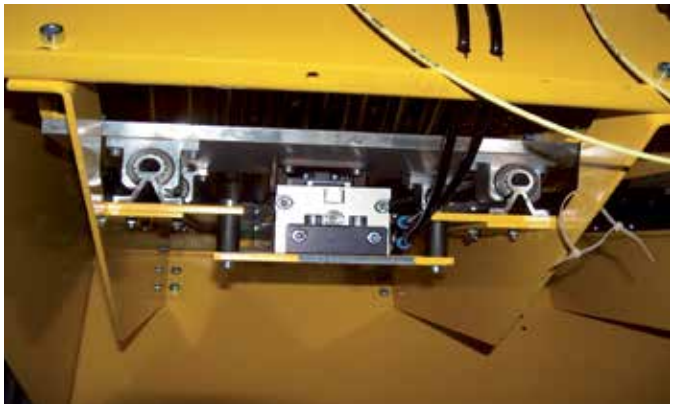

Machine tool carraige guide using low-cost DryLin® supported aluminum shafting

*X is the European equivalent material for iglide® T500

Notes

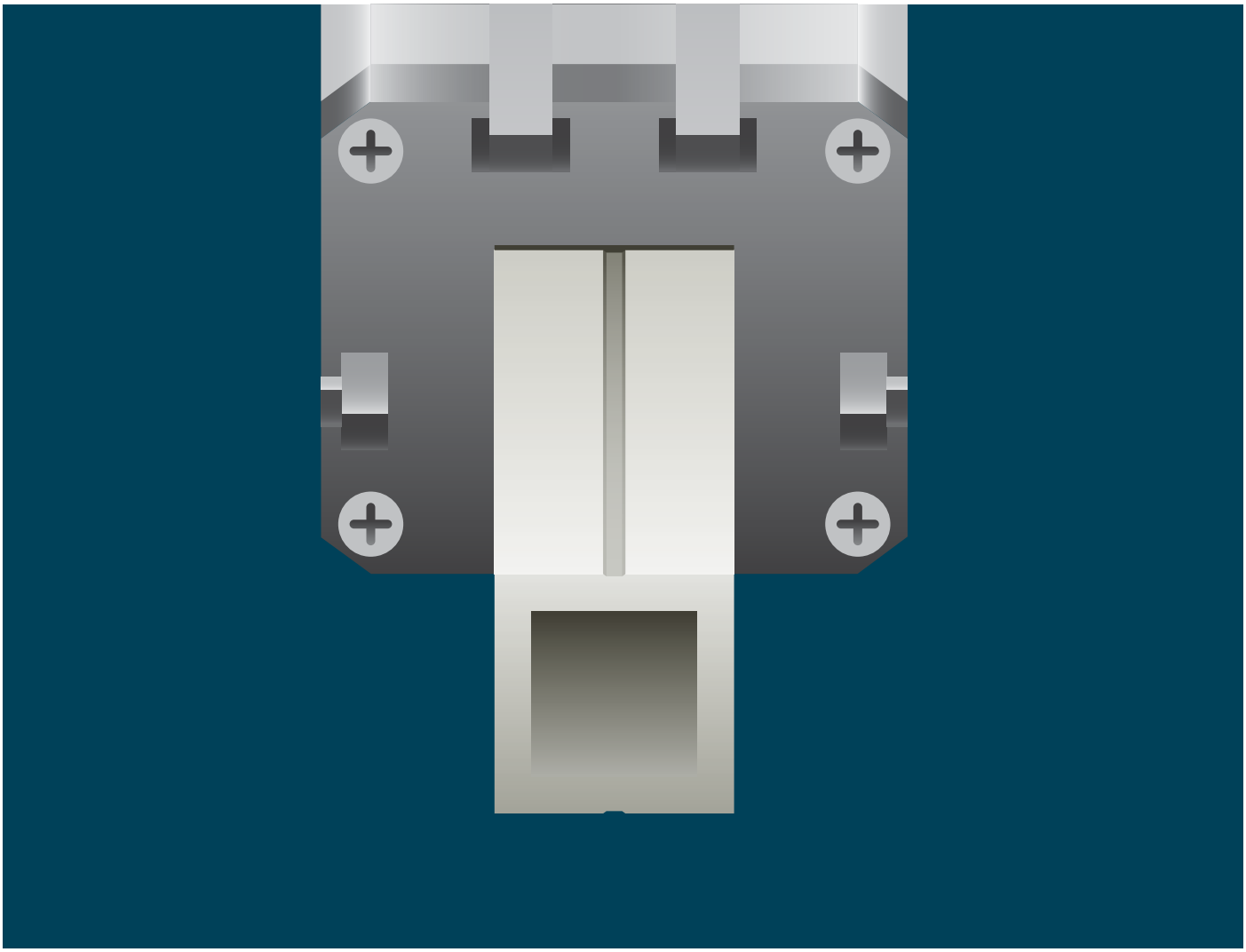

DryLin® Q Square Linear Guides

- Torque resistant
- Section rail made from hard anodized aluminum
- Apply moments up to 10 Nm
- Self-lubricating
- Lightweight
- Extensive accessories
- Fits standard aluminum framing systems

DryLin® Q - Square linear guides - Advantages

Torque resistant, space saving, light, unsupported installation

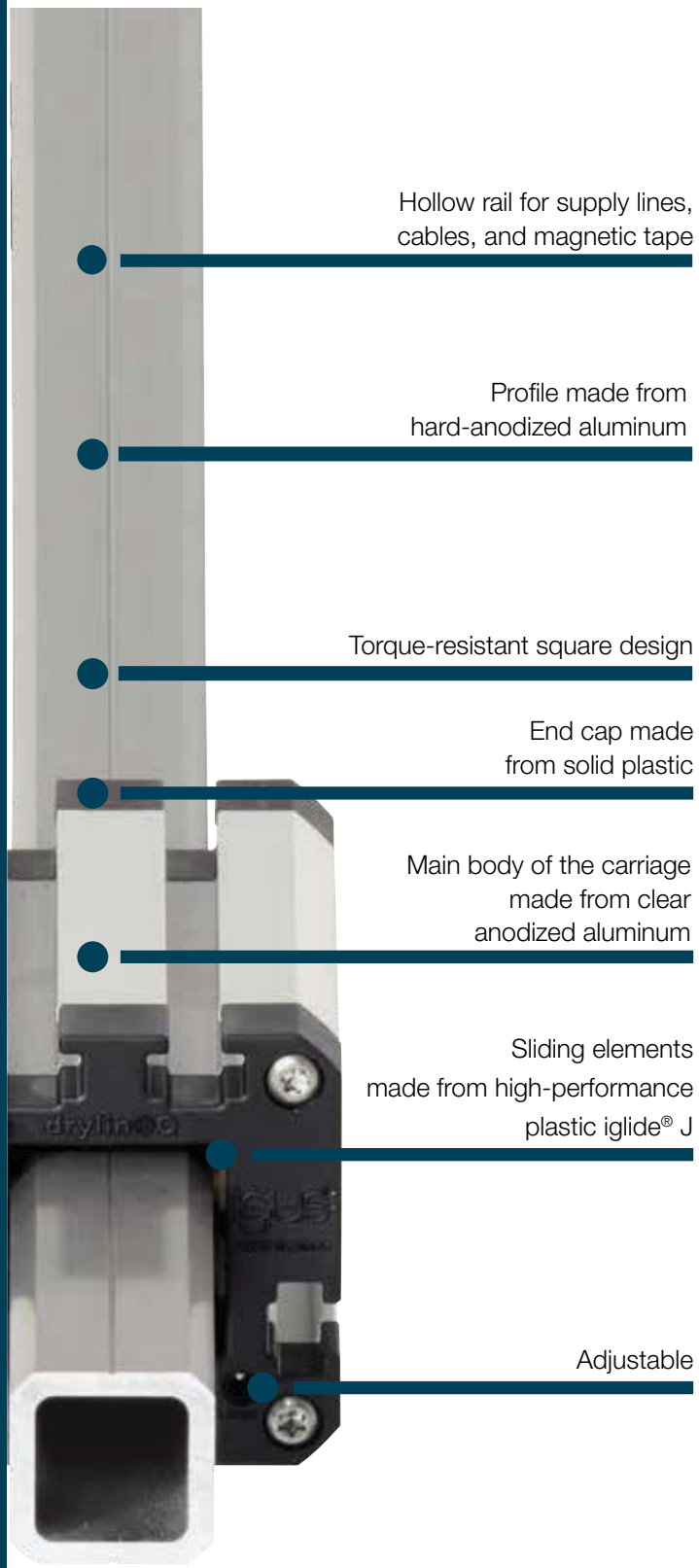

Self-lubricating square linear guides - DryLin® T

Linear movement with torque resistance, completely lubrication free. The DryLin® Q linear system offers maximum flexibility in design. Individual housing options such as solid plastic bearings and adjustable systems with and without manual clamp are available. Due to the hollow design, the rugged hard-anodized aluminum profile is very light and is suitable for the installation of supply cables. Options for mounting are extensive, among others, using slot nuts; size 20 can also be combined with all 20/20 aluminum framing profile kits.

- 100% self-lubricating
- Torque resistant
- Adjustable
- Applied forces from all directions possible
- Dirt resistance
- Low vibration and quiet
- Numerous mounting options

Typical application areas:

- Machine building
- Wood working industry
- Machine tools
- Handling, etc.
- Lab/liquid handling machines

Lifetime calculation online
➤ www.igus.com/drylin-expert

max. +194°F (+90°C)
min. –40°F (-40°C)

3 sizes (10/12/20)
Rail length: 1500 to 4,000 mm

Available from stock
Detailed information about delivery time online.

DryLin® Q - Square linear guides - Product overview

Linear system with individual housing versions

Square section rail

- Hard-anodized aluminum
- Robust, corrosion free, lightweight
- Apply moments up to 10 Nm
- For unsupported installation

➤ **Page 1122**

Linear carriage

- Unsupported carriage version with/without manual clamp
- Numerous fastening options on all sides via slot nuts
- Bearing clearance adjustable
- Can be combined with many aluminum framing profiles

➤ **Page 1123**

Bearing pillow block

- Enclosed anodized aluminum housing
- Standard type or twin housing
- Apply moments up to 3 Nm (Size 10) and up to 10 Nm (Size 20)
- Solid polymer housing available

➤ **Page 1125**

Square systems

- DryLin® Q system with integrated measuring system
- Hollow rail offers ideal protection of the magnetic tape
- Sensor integrated into the carriage, programmable functions

➤ **Page 1127**

- DryLin® E gripper axis with rack and pinion drive and stepper motor

➤ **Page 1338**

DryLin® Q - Square linear guides - Product range

Square section rail

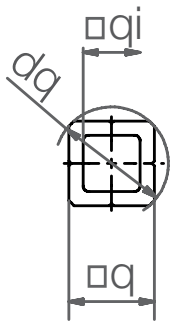

Order key

Type			Size	Option
A	W	M	Q - 10	- 1000
Aluminium shaft	Metric	Type square	Installation size	Length [mm]

Dimensions [mm]

Part No.	Weight [kg/m]	q	dq	qi ±0.02	Max. length
AWMQ-10	0.082	7.5	10	5	1,500
AWMQ-12	0.193	12	8.5	16	1,500
AWMQ-20	0.46	20	25	15	3,000

Matching accessories

Supports made from plastic

- Cost-effective mounting options
- Also can be used as floating support

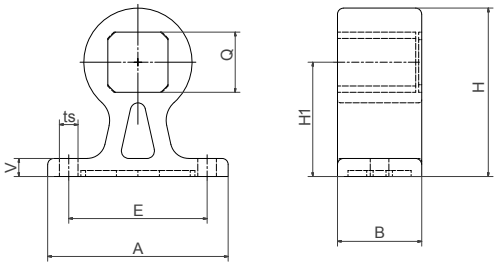

Dimensions [mm]

Part No.	A	H	B	Q	H1	E	ts	V
STZ-Q10-01-FL	30	21	14	7.5	14	20	3.3	3
STZ-Q20-01-FL	60	56	28	20	38	46	6.2	6

End caps for section rail

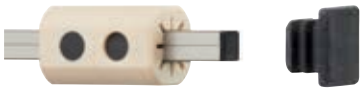

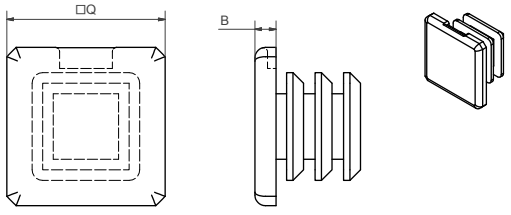

Dimensions [mm]

Part No.	Q	B
STZ-Q10-01-C	7.5	1
STZ-Q20-01-C	20	5

DryLin® Q - Square linear guides - Product range

Adjustable linear carriage

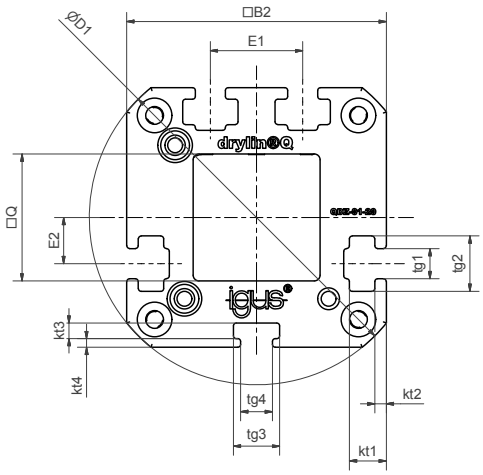

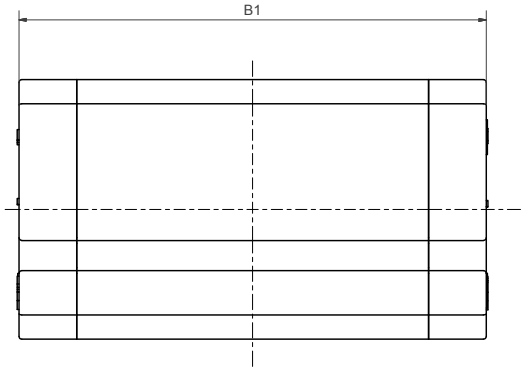

Order key

Type			Size
Q	W	E	- 01 - 20
Square	Linear carriage	Adjustable	Type standard	Installation size

Dimensions [mm]

Part No.	Weight [g]	M max. [Nm]	B1	B2 h7	D1	Q	E1	E2	tg1	tg2	tg3	tg4	kt1	kt2	kt3	kt4
QWE-01-12	110	5	80	34	44	12	12	6	5.5	8	8	–	–	–	3	1.25
QWE-01-20	210	10	81	45	58	20	16	8	5.5	9.6	8	5.5	6.4	2	2.7	1.5

Accessories: Slot nuts

Slot nuts offer mounting options (e.g. of sensors) on four sides of the housing. 8 pieces are included in the delivery of QWE carriages.
Part No. NOR-20602

Can be combined with:

AWMQ-12

AWMQ-20

DryLin® Q - Square linear guides - Product range

Adjustable linear carriage with manual clamp

Order key

Type	Size	Options
Q W E - 01 - 20 - HKA		

- Q: Square
- W: Linear carriage
- E: Adjustable
- 01: Type standard
- 20: Installation size
- HKA: Manual clamp

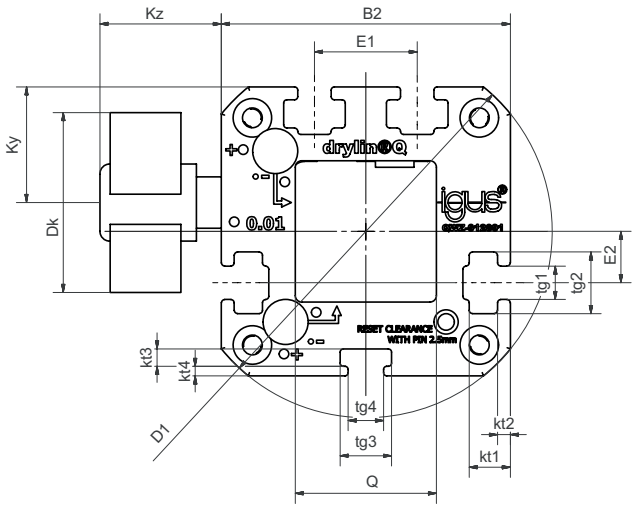

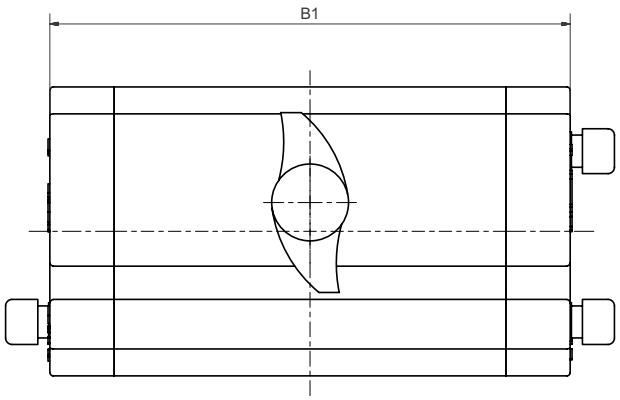

Dimensions [mm]

Part No.	Weight [g]	M max. [Nm]	B1	B2 h7	D1	Q	E1	E2	tg1	tg2	tg3	tg4
QWE-01-20-HKA	215	10	81	45	58	20	16	8	5.2	9.6	8	5.5

Part No.	kt1	kt2	kt3	kt4	Dk	Ky	Kz
QWE-01-20-HKA	6.4	2	2.7	1.5	28	18	19

The manual clamp has been developed for simple tasks. The creep behaviour of the clamped plastic causes a slackening in the clamping force over time (up to 70%). Therefore safety-related parts should not be clamped. Please contact our applications consultant if you require other options for the clamping.

Can be combined with:

AWMQ-20

DryLin® Q - Square linear guides - Product range

Q20 pillow block

Order key

Type							Size	
Q	J	R	M	T	-	05	-	20
Square	iglide® J	Closed design	Metric	Twin (optional)		Type compact		Installation size

QJRM-05-20

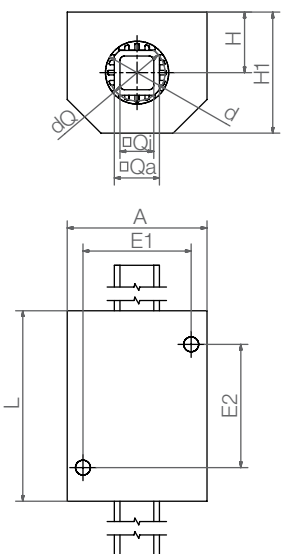

QJRMT-05-20

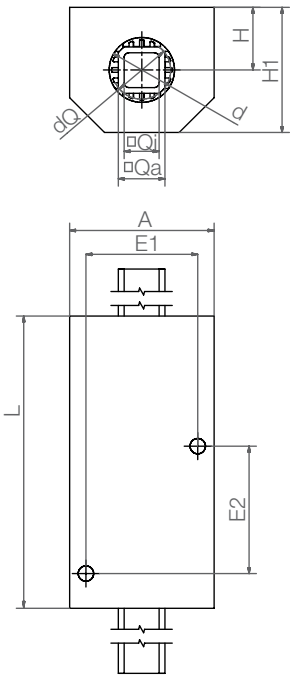

Dimensions [mm]

Part No.	Weight	A	H	H1	dQ	Qa	Qi	E1	E2	d	L
	[kg]		±0.02					±0.15	±0.15		
QJRMT-05-20	0.55	62	27	54	25	20	15	48	55	28	85
QJRM-05-20	0.25	62	27	54	25	20	15	48	–	28	40

Can be combined with:

AWMQ-20

DryLin® Q - Square linear guides - Product range

Flange pillow block

QJFM-01-...

QJFM-02-...

QJFMT-01-...

QJFMT-02-...

Order key

Type	Option	Size
Q J F M T	- 02	- 10

Square iglide® J	With flange	Metric	Twin (optional)	Type	Installation size

Options

01 = Round flange

02 = Square flange

QJFM-01

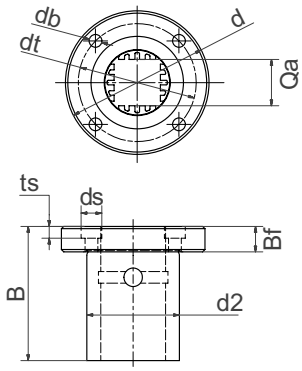

QJFM-02

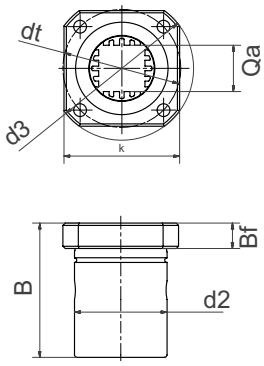

QJFMT-01

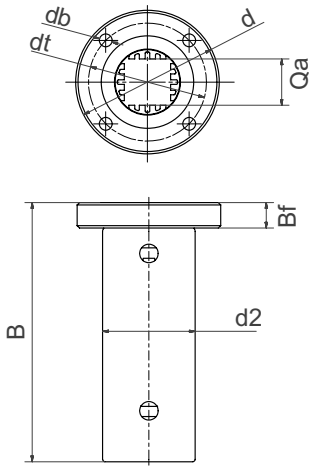

QJFMT-02

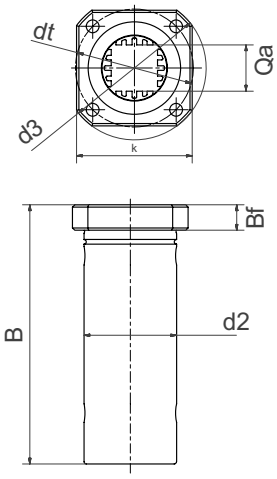

Dimensions [mm]

Part No.	Weight [kg]	k	d2 h7	Bf	Qa	d3 ±0.15	dt ±0.15	B	db	ds	ts
QJFMT-02-10	0.038	30	19	9	7.5	39	29	52	4.5	7.5	4.1
QJFMT-01-20	0.24	–	40	11	20	62	51	112	5.5	9.0	5.1
QJFMT-02-20	0.24	50	40	11	20	62	51	112	5.5	9.0	5.1
QJFM-01-20	0.14	–	40	11	20	62	51	58	5.5	9.0	5.1
QJFM-02-20	0.14	50	40	11	20	62	51	58	5.5	9.0	5.1

Can be combined with:

AWMQ-12

AWMQ-20

DryLin® Q - Square linear guides - Product range

Q10 pillow block

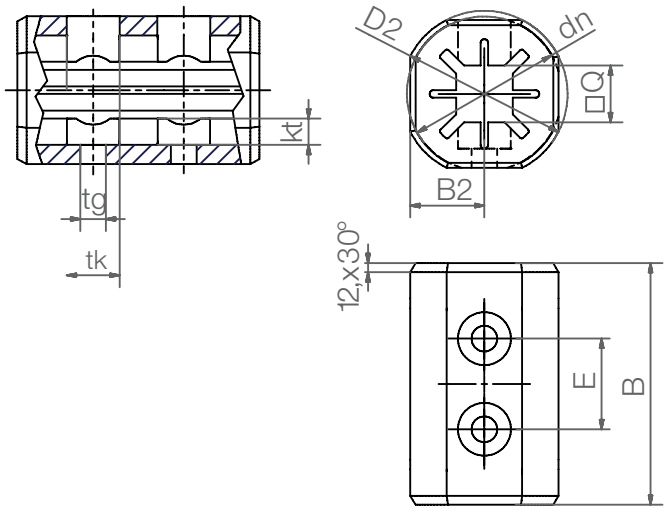

Order key

Type						Size	
Q	J	R	M	P	- 01	-	10
Square	iglide® J	Closed design	Metric	Solid plastic	Type standard		Installation size

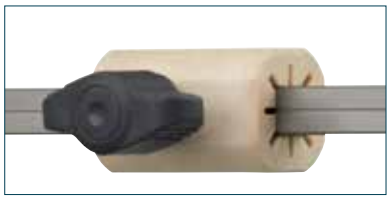

With manual clamp (optional)

Dimensions [mm]

Part No.	Weight [g]	M max. [Nm]	B	B2	D2	dn	E	Q	tk	tg	kt
QJRMP-01-10	11.3	3	32	9.8	22	22	12	7.5	6	3.4	3.5

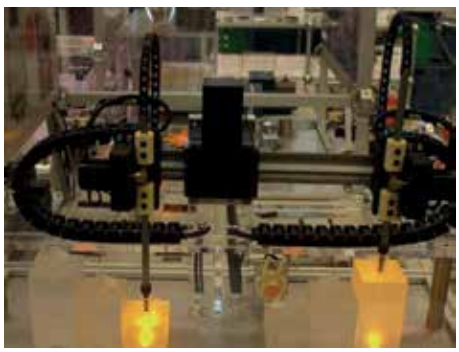

Pipette unit equipped with DryLin® Q square linear system combined with DryLin® GRW cantilever axis and NEMA step motor

Can be combined with:

AWMQ-10

DryLin® Q - Square linear guides - Product range

Accessories

- Hollow rail for supply lines (compressed air, cable)
- Extensive accessories
- Extremely compact
- A host of possible applications

Adapter for flange shaft block
STZ-Q10-AR-1012-16

Adapter kit e.g. for grippers/sensors
STZ-Q10-01-AM

Supports made from plastic
STZ-Q10-01-FL
STZ-Q10-01-LL

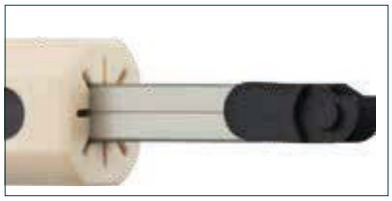

Chain connection for E-Chain® E2 micro
STZ-Q10-01-AC-E2

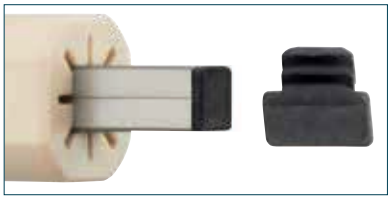

End caps for square section rail
STZ-Q10-01-C
STZ-Q20-01-C

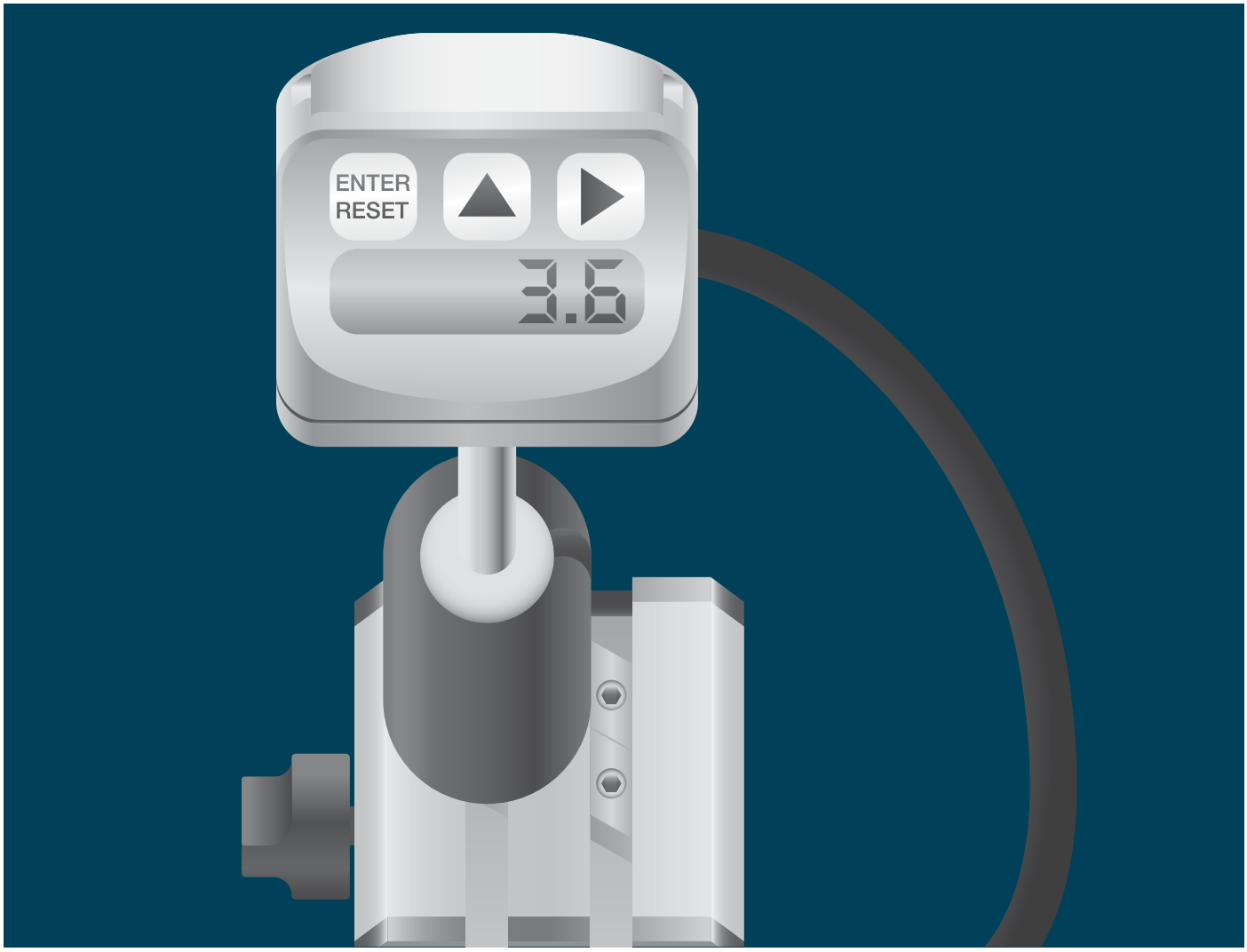

DryLin® Digital Measuring Systems

- Ready to install
- Self-lubricating
- Lockable carriages
- Battery operation
- Flexible and mobile

DryLin® Digital measuring systems - Advantages

Self-lubricating, light, quiet, long service life, low cost

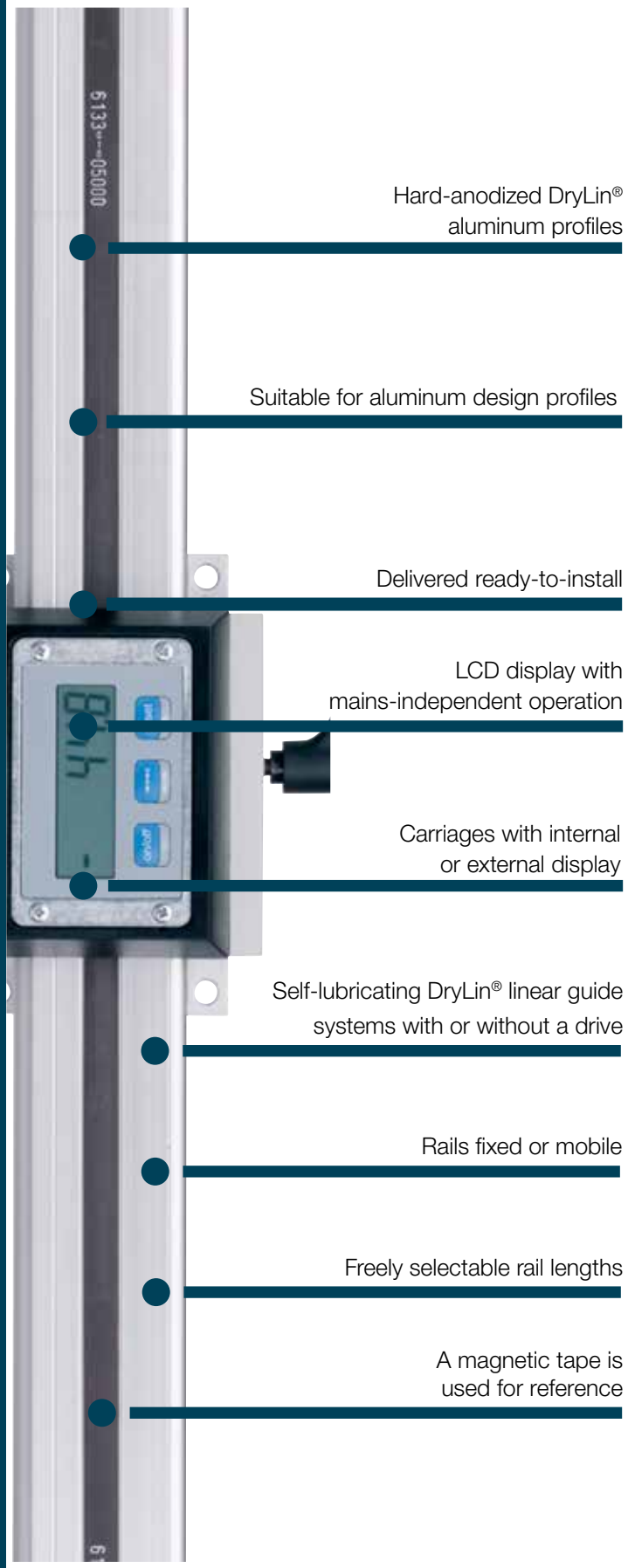

DryLin® Digital measuring systems

The DryLin® measuring systems use magnetic tape with incremental measuring systems. The integrated battery ensures a service life of many years and enables almost absolute measurement. The sensor, measuring display and magnetic tape are integrated in self-lubricating DryLin® W and Q linear guide systems. With customer-specific rail lengths, systems are supplied as ready-to-install linear modules. Typical application areas are format adjustments.

- Simple installation
- Easy to adjust
- Self-lubricating and maintenance free
- Battery powered
- Unsupported use
- Optional:
  Mounted rail -> measuring carriage moves
  Mounted measuring rail -> rail moves

Typical application areas

- Format adjustments ● Bending machines
- Band saws ● Stop-dog positioning for profiles, frames, plates, tubes, wood and bar stock

Lifetime calculation online
➤ www.igus.com/drylin-finder

max. +158°F (+70°C)
min. +14°F (-10°C)

Carriage widths: 45 - 134 mm
Rail length: up to 4,000 mm

Detailed technical data
➤ www.igus.com/drylin-measuring

Available from stock
Detailed information about delivery time online.

DryLin® Digital measuring systems - Product overview

Profile guide systems for almost unlimited design freedom

DryLin® Q square guide for unsupported structures

- Measuring sensor integrated in the carriage
- With fixed or flexible display

➤ **Page 1134**

SLW linear module with integrated measuring sensor

- Driven by trapezoidal thread
- Programmable display

➤ **Page 1135**

DryLin® W linear guide with digital measuring display

- Max. rail length: 4,000 mm
- Measuring display attached to the side of the carriage

➤ **Page 1136**

DryLin® W linear guide with fixed measuring display

- Moving rail with stationary carriage
- Max. rail length: 2,000 mm

➤ **Page 1136**

DryLin® W linear guide with external measuring display

- Carriage with integrated sensor
- Suitable for aluminum design profiles

➤ **Page 1137**

DryLin® W linear guide system for external data output

- Variable sensor type, output power and cable length
- Cable guide and protection possible through E-Chain® 045-10-028-0

➤ **Page 1138**

Analog position indicator available

➤ **Page 1296**

DryLin® Digital measuring systems - Application examples

Measuring display for series SLWM/QKM

Properties	
Measuring principle	Incremental, with zero function
Display	LCD display 7.5 mm high digits
Display accuracy	max. 0.1 mm
Display/display area	-99 999 …+99 999
Function	Digit direction, decimal point, unit of measurement (mm, inch), preset activation
Power supply	Battery 1/2 AA, 3.6 V integrated, service life of up to 4 years
Magnetic sensor	Securely connected (external)
Type	Installation housing
Housing	Plastic
Protection class	IP54 display
	IP67 sensor
Working temperature	+32°F to 122°F (0 to +50°C)
Humidity	35-85%
Speed	max. 2.5 m/s
Display keyboard	3 function buttons

Measuring display for series WKM/WKMEDR

Properties	
Measuring principle	Incremental, with zero function
Display	Lowest power LCD with integrated sensor, battery operated
Display accuracy	max. 0.1 mm
Repeatability	± 1 digit
Display/display area	-99 999 …+99 999
Function	Incremental and reset function
	Direct input offset value
Power supply	Battery integrated, service life of up to 10 years
Magnetic sensor	Securely connected
Type	Installation housing
Housing	Zinc die-casting
Protection class	IP20 overall device
	IP60 display page
Working temperature	+32°F to 140°F (0 to +60°C)
Humidity	95% rel. humidity, condensation not permissible
Speed	max. 3.5 m/s

DryLin® Digital measuring systems - Application examples

Length measuring system WKMEX

Properties	
Measuring principle	Incremental
Repeatability	± 1 increment
Pole division	5 mm
Sensor housing	Zinc die-casting
Protection class	IP67
Application temperature	+14°F to 158°F (-10 to +70°C)
Max. humidity	95%, non-condensing
Max. speed	4.0 m/s
VDC power supply	5 VDC or 10… 30 VDC
Current draw	5 VDC: max. 200 mA
	10.. 30 VDC: max. 150mA
Internal evaluation electronics	Internal evaluation electronics
Output power	5 V-TTL line driver or 10.. 30 V_HTL
Source tracks	A, A‘,B, B‘, Z, Z‘
Max. cable length	Max. cable length 5V/5V-TTL = 10m
	10-30V/10-30V = 30m
	10-30V/5V-TTL = 50m
Max. permissible distance from magnetic tape	2.0 mm
Connection method	Open cable ends

Magnetic tape for measuring display WKM

Properties	
Encoding	Incremental, single-track system
Basic pole division	5 mm pole division
Band width	10 mm
Operating temperature, processed	+32°F to 140°F (0 to +60°C)
Tape structure	Magnetic tape stuck on with adhesive tape
External magnetic influence	External magnetic fields on the magnetic tape surface must not exceed 64 mT (640 Oe; 52KA/m) as this can damage or destroy the magnetic tape encoding
Protection class	Carrier tape, stainless steel (optional)

DryLin® Digital measuring systems - Product range

Integrated measuring system

- Protected magnetic tape
- Attachment options using slot nuts
- Manual clamp on carriage
- Unsupported attachment
- Profile AWMQ-20 max. length 1,500 mm
- Sensor integrated in the carriage, saving space
- Technical data ➤ **Page 1132**

Order key

Type	Option	Size
Q K M	- 01	- 20

Square	Measuring system	Metric	Carriage type	Installation size

Options

01 = display fixed in place
02 = display flexible with angle joint

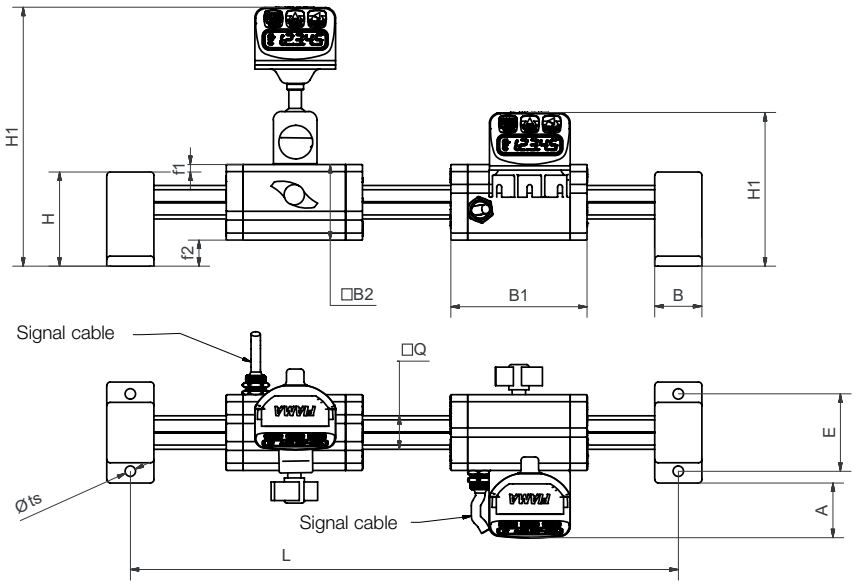

QKM-02-20 QKM-01-20

Dimensions [mm]

Part No.	M max. [Nm]	L Carriage + stroke	B h7	B1	B2	H	H1	E	Q	ts	f1	f2	A
QKM-01-20	10	18 + 94	28	94	45	58	155	46	20	6.2	4.5	15.5	33
QKM-02-20	10	18 + 94	28	94	45	58	92	46	20	6.2	4.5	15.5	33

DryLin® Digital measuring systems - Product range

Ready-to-install systems for external data output

Order key

Type				Size	
S	L	W	M	-	1080
Linear module DryLin® SLW		Measuring system		Installation size SLW linear module	

- Sensor integrated in the carriage, saving space
- Operation without mains supply
- Integrated magnetic tape
- Lubrication free operation
- Extensive accessories available
- Sensor integrated in the carriage, saving space
- Technical data ➤ **Page 1132**
- Technical data DryLin® linear module SLW ➤ **Page 1261**

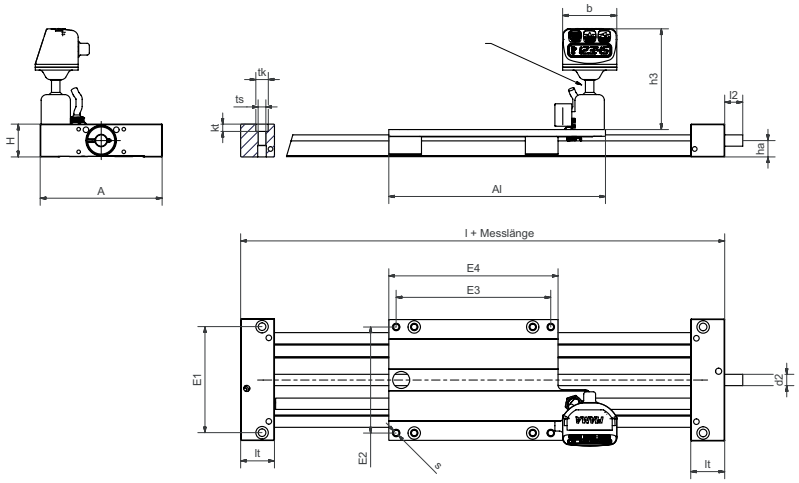

Dimensions [mm]

Part No.	A	Al	H	E1	E2	E3	E4	l	l2	lt	tk	kt	ts	s	ha	d2	h3	b
SLWM-1080	108	192	29	94	94	137	150	236	17	22	11	6.4	6.8	6.6	14.5	TR10x2	90	50

DryLin® Digital measuring systems - Product range

Digital measuring systems with direct position readout

WKM, Series 10 and 20

- Lockable carriage
- Display optionally to the right (R) or left (L) of the guide carriage
- Max. rail length 4,000 mm (effective measuring length max. 3,757 mm)
- Technical data ➤ **Page 1132**

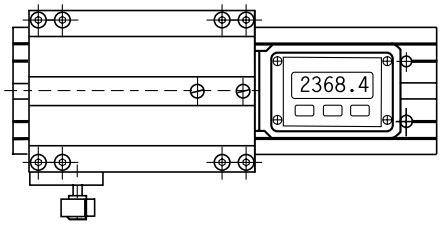

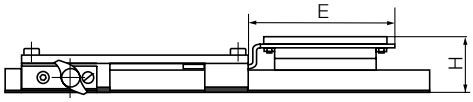

Dimensions [mm]

Part No.	DryLin® linear profile [89]	H	E
WKM-10-80-15-01-L	WK-10-80-15-01	36	93
WKM-10-80-15-01-R	WK-10-80-15-01	36	93
WKM-20-80-15-01-L	WK-20-80-15-01	40	93
WKM-20-80-15-01-R	WK-20-80-15-01	40	93

[89] Profile dimensions ➤ Page 785

WKM, Series 11

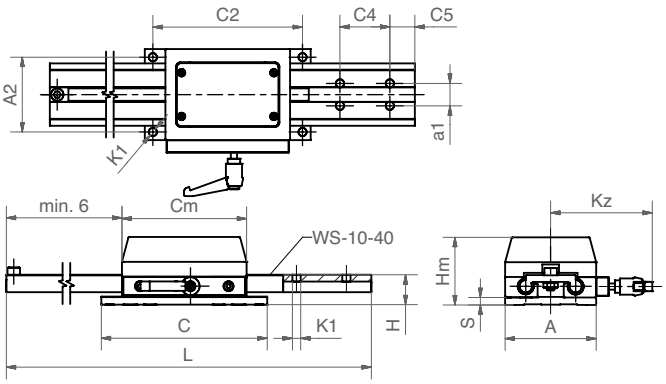

Dimensions [mm]

Part No.	L max.	C4	C5	a1	C2	A2	K1	C	A	H	S	Cm	Hm	kz
WKM-11-40	2,000	40	20	18	120	60	6.6	133	73	24	6	100	54	82

DryLin® Digital measuring systems - Product range

Measuring system with freely positionable readout display

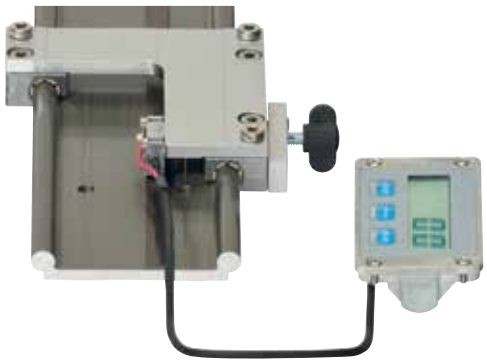

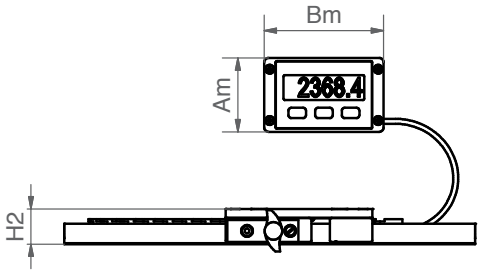

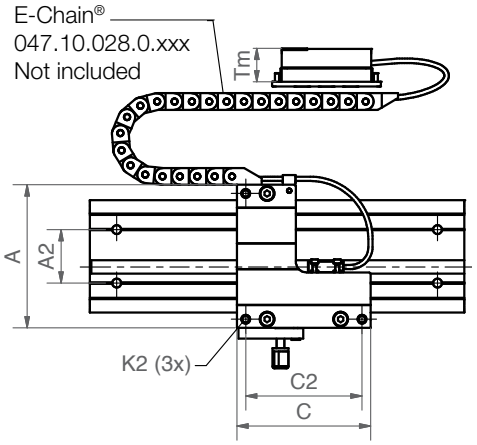

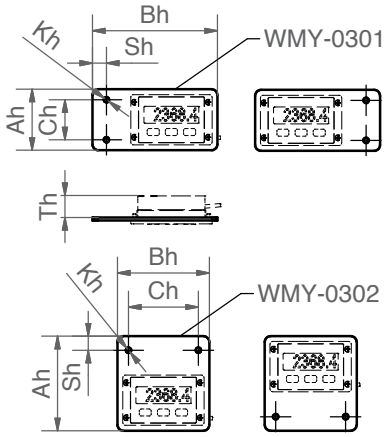

Options for attaching the external display

Order key

Type	Size
WKMEDR	- 10-80-10

DryLin® W measuring system	External display	Attached on the right	Installation size	Rail width	Rail length 100 mm

Options

R = attachment to the right of the guide carriage

L = attachment to the left of the guide carriage

Dimensions [mm]

Part No.	A Width	C Length	A2	C2	K2	H2 ±0.17	Am	Bm	Tm
WKMEDR(L)[90]-10-80-10-…	107	100	94	87	M6	24	82	51	25

[90] Suitable for attachment on the right (R) or left (L)

Display dimensions [mm]

Part No.	Ah	Bh	Ch	Sh	Kh	Th
WMY-0301	61	125	40	14	ø5.4	22
WMY-0302	94.5	92	70	14	ø5.4	22

DryLin® Digital measuring systems - Product range

Ready-to-install systems for external data output

- At 4 edge triggering (setting parameters of the display or control system, for example, IW4) and +68°F (+20°C) ambient temperature: resolution: ±(0.025 + 0.02 · L) L = measurement length in meters; repeatability: ±0.025 mm
- At 1 edge triggering (setting parameters of the display or control system, for example, IW1) and +20°C ambient temperature: resolution: ±(0.1 + 0.02 · L) L = measurement length in meters; repeatability: ±0.025 mm
- Small sensor with integrated evaluation electronics
- Output signals: differential mode sustained short circuit-proof with inverted signals (A. A/, B, B/, Z, Z/)
- Further technical data ➤ **Page 1133**

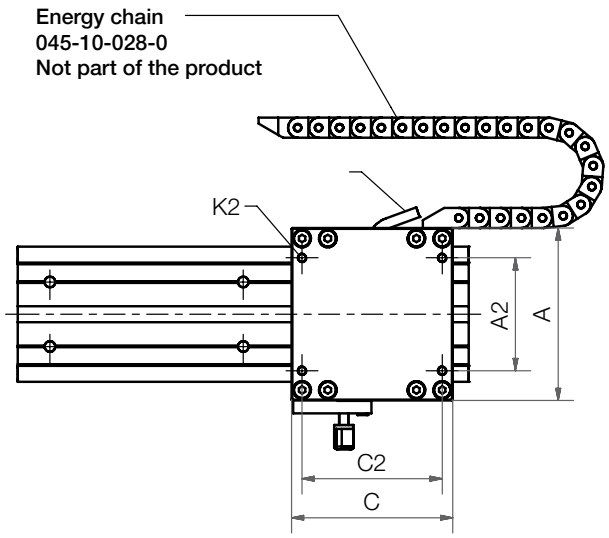

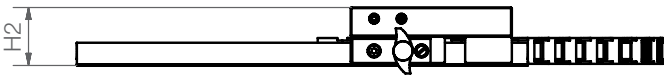

Dimensions [mm]

Part No.	H2	C	C2	A	A2	K2	Resolution
WKMEX-10-80	36	100	87	107	70	M6	0.1

Versions

Sensor type	Nominal voltage	Output power	Max. length of signal cable
00	10–30 V	HTL 10–30 V	30 m
01	10–30 V	TTL Line Driver	50 m
11	5 V	TTL Line Driver	10 m

DryLin® Stainless Steel

- Self-lubricating
- Temperature resistant up to 482°F
- Corrosion resistant
- Chemical resistant
- Standard parts with quick delivery

DryLin® Stainless steel - Advantages

The oil-free, self-lubricating qualities of DryLin® linear guide systems are ideal for extreme applications: Saltwater in marine environments, caustic washdown in food processing/packaging equipment and chemicals in biotech/lab machinery to name a few.

The suitable iglide® material can be selected according to the application and used for linear and/or rotary motions.

- Self-lubricating
- Temperature resistant up to +482°F (250°C)
- Corrosion resistant
- Chemical resistant
- Cost-effective

DryLin® guides and iglide® plastics are well suited for use on stainless steel shafting, and are especially good in applications requiring 300-Series stainless steels, such as 304 and 316. Since the plastic plain bearings do not have the point-to-point contact on shafting that ball bearings do, they do not require more expensive corrosion-prone case-hardened stainless steels such as 440C.

Industries and application areas:

- Food and bottling industry
- Meat processing
- Harbor and crane facilities
- Marine
- Chemical industry
- Electroplating industry
- Medical and rehabilitation technologies
- Packaging machines

No external lubrication with DryLin® for a baking and conveyor unit

DryLin® W guide rails are accredited to Cleanroom standards and therefore used in this blister machine.

DryLin® R plain bearings - Product overview

Closed, 303 stainless steel adapter (1.4305) - iglide® J liner, inch

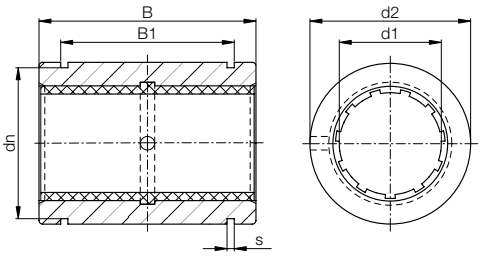

DryLin® STAINLESS STEEL

Order key

Type	Size	Option
R J U I	-01-12	-ESR
Closed	iglide® J	Liner	Inch	Standard	Diameter	Stainless steel

- 303 Stainless steel adapter (1.4305)
- Dimensionally interchangeable with linear ball bearings
- Equipped with liner made of iglide® J
  Temperature range -40°F to +194°F (-40°C to +90°C)
  JUI-01 (standard)
- T500 liner optional for chemicals/high temps
  (up to 482°F for steel housing)
- Suitable shafting for iglide® J: DryLin® AWI aluminum, case-hardened, 300 series stainless Best shafting for T500: hard-chrome and hard-stainless steel

Dimensions (inch)

Part No.	Nominal Size	Tolerance[78]	d2 ISO h7	B ISO h10	B1 ISO H10	s	dn	e	o +.004	do
RJUI-01-08ESR	1/2	.0016 -.0032	.8750	1.2500	.979	.0520	.8200	.281	.1250	.7120
RJUI-01-10ESR	5/8	.0016 -.0032	1.1250	1.5000	1.124	.0620	1.0600	.312	.1250	.9620
RJUI-01-16ESR	1	.0016 -.0032	1.5625	2.2500	1.773	.0740	1.4710	.500	.1250	1.3990
RJUI-01-20ESR	1-1/4	.0020 -.0041	2.0000	2.6200	2.023	.0740	1.8890	.625	.1250	1.8370
RJUI-01-24ESR	1-1/2	.0020 -.0041	2.3750	3.0000	2.440	.0950	2.2410	.750	.1620	2.1520

Housing Bore Recommendations

Nominal ID Size	Min.	Max.
1/2	0.8750	0.8758
5/8	1.1250	1.1258
1	1.5625	1.5635
1-1/4	2.0000	2.0010
1-1/2	2.3750	2.3760

Load Data

Part No.	F max, dynamic p = 725 psi (lbs)	F max, static p = 5075 psi (lbs)
RJUI-01-08ESR	225	1575
RJUI-01-10ESR	338	2365
RJUI-01-16ESR	811	5678
RJUI-01-20ESR	1184	8287
RJUI-01-24ESR	1622	11358

[78] According to igus® testing method ➤ Page 1096
[82] Design standards ➤ Page 1001
Please note: Installation instructions ➤ Page 1003

Also available with the following liners:

JUI-11

TUI-01 (XUM-01)

E7UI-01

DryLin® R Linear - Product range

Closed 303 stainless steel adapter (1.4305) - iglide® J liner, metric

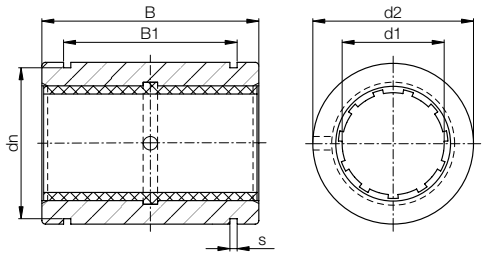

DryLin® STAINLESS STEEL

- 303 stainless steel adapter
- Dimensionally interchangeable with linear ball bearings
- Equipped with liner made of iglide® J
  Temperature range -40°F to +194°F (-40°C to +90°C) JUM-01 (standard)

Order key

Type	Size	Option
R J U M-01-12- ES		

Closed	iglide® J	Liner	Metric	Standard	Inner Ø	Stainless steel

Dimensions [mm]

Part No.	d1	d1-Tolerance[78)]	d2	B	B1	s	dn
			h7	h10	H10	H10	h10
RJUM-01-12ES	12	+0.030 +0.088	22	32	22.6	1.30	20.5
RJUM-01-16ES	16	+0.030 +0.088	26	36	24.6	1.30	24.2
RJUM-01-20ES	20	+0.030 +0.091	32	45	31.2	1.60	29.6
RJUM-01-25ES	25	+0.030 +0.091	40	58	43.7	1.85	36.5
RJUM-01-30ES	30	+0.040 +0.110	47	68	51.7	1.85	43.5

Part No.	Housing Bore Recommendations	
	Min.	Max.
RJUM-01-12ES	22.000	22.021
RJUM-01-16ES	26.000	26.021
RJUM-01-20ES	32.000	32.025
RJUM-01-25ES	40.000	40.025
RJUM-01-30ES	47.000	47.025

Load Data

Part No.	F max, dynamic p = 5 MPa (N)	F max, static p = 35 MPa (N)
RJUM-01-12ES	960	6,720
RJUM-01-16ES	1,440	10,080
RJUM-01-20ES	2,250	15,750
RJUM-01-25ES	3,625	25,375
RJUM-01-30ES	5,100	35,700

78) According to igus® testing method ➤ Page 1096
82) Design standards ➤ Page 1001
Please note: Installation instructions ➤ Page 1003

Also available with the following liners:

JUM-11

TUM-01 (XUM-01)

E7UM-01

DryLin® W Profile guides - Product range

Single rail round, made from stainless steel V4A

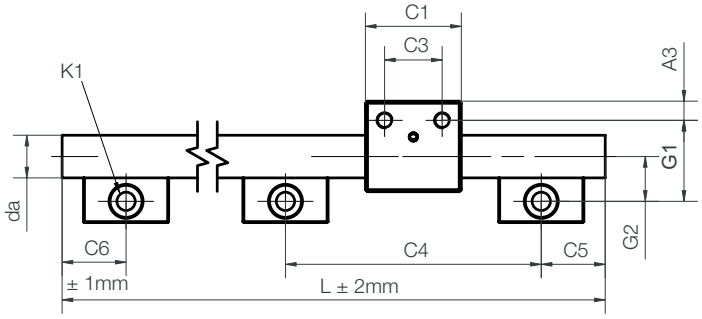

DryLin® STAINLESS STEEL

Material for housing and shaft support	1.4408 (AISI 316)
Shaft material	1.4571 (AISI 316Ti)
Size 25	
Material for shaft, shaft support, housing	1.4571 (AISI 316Ti)

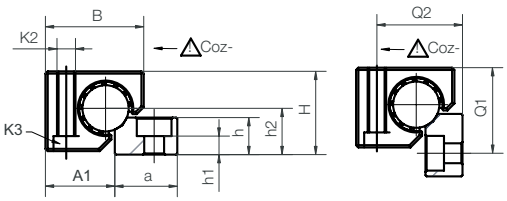

Technical data and dimensions [mm]

Part No.	Weight [kg/m]	H[57] ±0.25	da -0.1	L max.	a –0.3	h	h1	h2	G1	G2	A1	Q1	Q2
WS-10-ES-FG	0.87	18	10	3,000	27	5.5	5.5[58]	9	27	17	16.5	-	-
WS-16-ES-FG	2.22	27	16	3,000	27	12	4.5	14	33	19	25	32	28
WS-20-ES-FG	3.37	36	20	3,000	27	16	8	20	38	21	30	37	37
WS-25-ES	5.21	45	25	3,000	32	11.5	5.5	25	46.5	25.5	37.5	45.5	46

Part No.	C4	C5 min.	C5 max.	C6 min.	C6 min.	K1 for screw DIN 912	Iy [mm⁴]	Iz [mm⁴]	Wby [mm³]	Wbz [mm³]
WS-10-ES-FG	120	20	79.5	20	79.5	M6[58]	491	491	98	98
WS-16-ES-FG	120	20	79.5	20	79.5	M8	3,217	3,217	402	402
WS-20-ES-FG	120	20	79.5	20	79.5	M8	7,854	7,854	785	785
WS-25-ES	150	25	99.5	25	99.5	M10	19,175	19,175	1,534	1,534

[57] Height dimension minus the bearing clearance tolerance [58] With plain holes

Can be combined with:

WJ200UM(T)-... WJ200UME-... WJUM-..-ES-FG WJRM-...

Suitable liner materials

iglide® J iglide® T500 iglide® E7 iglide® A180

DryLin® W Profile guides - Product range

Round double rail and bearing carriage, made from 316 (V4A) stainless steel

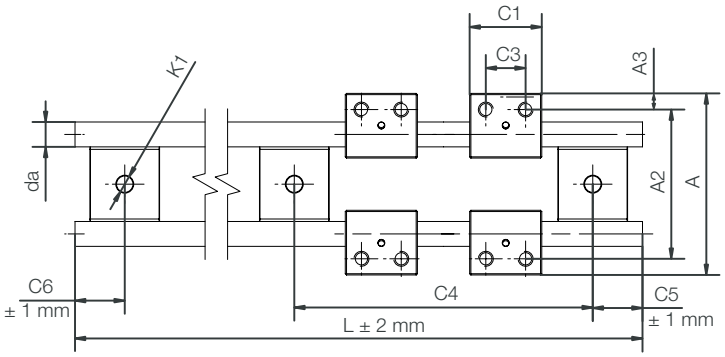

Size 10-20

Material for housing and shaft support	1.4408 (AISI 316)
Shaft material	1.4571 (AISI 316Ti)

Size 25

Material for shaft, shaft support, housing	1.4571 (AISI 316Ti)

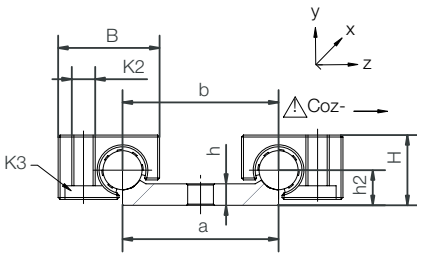

Technical data and dimensions [mm]

Part No.	Weight [kg/m]	H[57] ±0.25	da h9	L max.	a –0.3	b	h	h2	A	A2
WS-10-40-ES-FG	1.58	18	10	3,000	40	40	5.5	9	73	60

Part No.	C4	C5 min.	C5 max.	C6 min.	C6 max.	K1 for screw DIN 912
WS-10-40-ES-FG	120	20	79.5	20	79.5	M6

[57] Height dimension minus the bearing clearance tolerance

Bearing carriage, round, made from 316 (V4A) stainless steel

DryLin® STAINLESS STEEL

Technical data and dimensions [mm]

Part No.	Weight [g]	B	C1	C3	A3	K2	K3 Countersunk head screw	Stat. load capacity Coy [N]	Coz+ [N]	Coz- [N]
WJUM-01-10-ES-FG[59]	57	26	29	16	6.5	M6	M5	3,800	3,800	950
WJUM-01-16-ES-FG[59]	134	34.5	36	18	9	M8	M6	6,900	6,900	1,450
WJUM-01-20-ES-FG[59]	280	42.5	45	27	9	M8	M6	11,000	11,000	1,900
WJUM-01-25-ES[59]	564	52.5	58	36	11	M10	M8	16,000	16,000	3,600

[59] alternative with XUMO-01-... liners for high temperatures available. Part No. WXUM-01-...

Notes

DryLin® Shafts - Product range

Stainless steel shafts

DryLin® STAINLESS STEEL

- Completely supported and mounted with standard aluminum support
- Inch dimensions available - contact igus®

- For supported shafts:
  - ➤ Shaft support supplied in lengths of 600 mm max.
  - ➤ Standard pitch T2, T1 also possible on request
  - ➤ Hole pitches symmetrical C5 = C6

Dimensions [mm] – hardened stainless steel 440C (1.4125)

Part No.	d	Weight [kg/m]	Max. length	Effective hardness depth with 440C (1.4125)
EWM-06[88)]	06	0.222	3,000	0.8
EWM-08[88)]	08	0.359	4,000	0.9
EWM-10[88)]	10	0.617	4,000	0.9
EWM-12	12	0.888	6,000	1.0
EWM-16	16	1.578	6,000	1.2
EWM-20	20	2.466	6,000	1.6
EWM-25	25	3.853	6,000	1.8
EWM-30	30	5.549	6,000	2.0
EWM-40	40	9.865	6,000	2.2
EWM-50	50	15.413	6,000	2.4

[88)] Material SAE 1084 (1.4112)

DryLin® Shafts - Product range

Stainless materials 440C (1.4125), 420C (1.4034), 304 (1.4301), 316 (1.4571)

Order key

Type		Size	Options
E	W M	- 06	- 2000
Steel shaft	Metric	Outer Ø	Shaft length [mm]

Available shaft materials:
Stainless steel 440C (1.4125 or 1.4112), hardened/ground ➤ EWM
Stainless steel 420C (1.4034), hardened/ground ➤ EEWM
Stainless steel 304 (1.4301), drawn ➤ EWMR
Stainless steel 316 (1.4571), drawn ➤ EWMS

Dimensions [mm] – hardened stainless steel 420C (1.4034)

Part No.	d	Weight [kg/m]	Max. length	Effective hardness depth with 420C (1.4034)
EEWM-06	06	0.222	3,000	0.8
EEWM-08	08	0.359	4,000	0.9
EEWM-10	10	0.617	4,000	0.9
EEWM-12	12	0.888	6,000	1.0
EEWM-16	16	1.578	6,000	1.2
EEWM-20	20	2.466	6,000	1.6
EEWM-25	25	3.853	6,000	1.8
EEWM-30	30	5.549	6,000	2.0
EEWM-40	40	9.865	6,000	2.2
EEWM-50	50	15.413	6,000	2.4

Dimensions [mm] – 304 stainless steel (1.4301) - EWMR, or 316 soft stainless steel (1.4571) - EWMS

Part No.	d	Weight [kg/m]	Max. length
EWMR-10	10	0.617	4,000
EWMS-10	10	0.617	4,000
EWMR-12	12	0.888	6,000
EWMR-16	16	1.578	6,000
EWMR-20	20	2.466	3,000
EWMS-20	20	2.466	6,000
EWMR-25	25	3.853	6,000
EWMR-30	30	5.549	6,000

Order example:
EWM-16-500 corresponds to a stainless steel shaft 16 mm Ø 440C (1.4125), 500 mm in length

DryLin® Shafts - Product range

Supported stainless steel shafts

EWUM

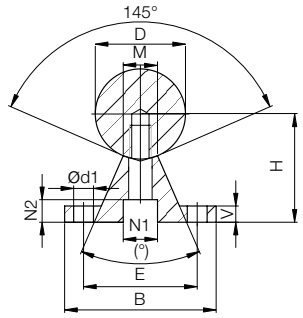

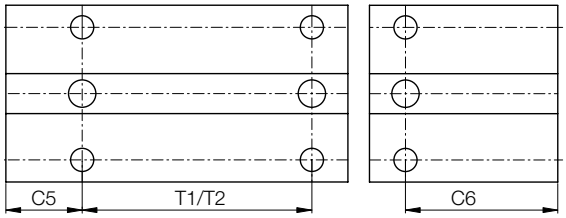

EWUMN

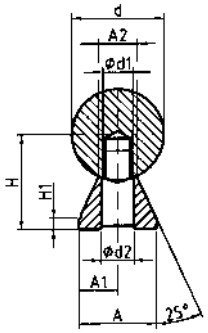

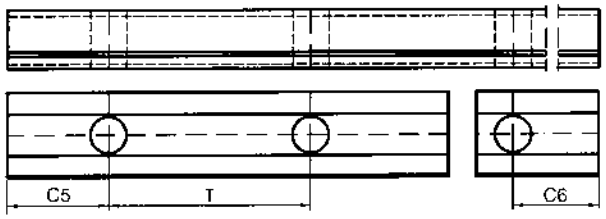

DryLin® STAINLESS STEEL

Dimensions [mm] – supported 440C stainless steel shafts (1.4125)

Part No.	D	B	H	V	N1	N2	d1	M	(°)	E	T1[87]	C5/C6		T2	C5/C6		Weight
												min.	max.	for T2	min.	max.	
			±0.02								±0.15	for T1		Standard	Standard		[kg/m]
EWUM-12	12	40	22	5	8.0	5.0	4.5	5.8	50	29	75	20	57	120	20	79	1.75
EWUM-16	16	45	26	5	9.5	6.0	5.5	7.0	50	33	100	20	69	150	20	94	2.64
EWUM-20	20	52	32	6	11.0	6.5	6.6	8.3	50	37	100	20	69	150	20	94	3.97
EWUM-25	25	57	36	6	14.0	8.5	6.6	10.8	50	42	120	20	79	200	20	119	5.65
EWUM-30	30	69	42	7	17.0	10.5	9.0	11.0	50	51	150	20	94	200	20	119	7.93
EWUM-40	40	73	50	8	17.0	10.5	9.0	15.0	50	55	200	20	119	300	20	169	12.88
EWUM-50	50	84	60	9	19.0	12.5	11.0	19.0	46	63	200	20	119	300	20	169	19.60

[87] Pitch T1 on request; standard is T2

Dimensions [mm] – low level supported 440C stainless steel shafts (1.4125)

Part No.	d	H	H1	A	A1	A2	d1	d2	T	C5/C6		Weight
		±0.02				±0.02				min.	max.	[kg/m]
EWUMN-12	12	14.5	3	11	5.5	5.4	M4	4.5	75	20	57	1.62
EWUMN-16	16	18	3	14	7.0	7.0	M5	5.5	75	20	57	2.54
EWUMN-20	20	22	3	17	8.5	8.1	M6	6.6	75	20	57	3.81
EWUMN-25	25	26	3	21	10.5	10.3	M8	9.0	75	20	57	5.62
EWUMN-30	30	30	3	23	11.5	11.0	M10	11.0	100	20	69.5	7.63
EWUMN-40	40	39	4	30	15.0	15.0	M12	13.5	100	20	69.5	13.47
EWUMN-50	50	46	5	35	17.5	19.0	M14	15.5	100	20	69.5	20.31

Low level supported shafts are delivered unassembled.

Order example:
EWUMN-16-500 corresponds to a low level supported 440C stainless steel shaft (1.4125) 16 mm Ø, with length of 500 mm

DryLin® Shafts - Product range

Partially supported stainless steel shafts

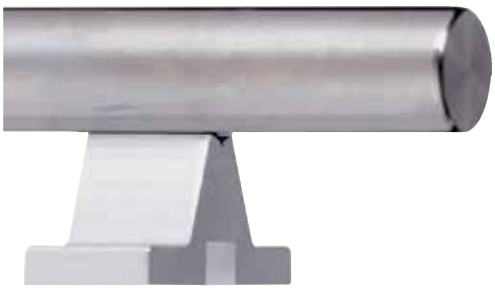

DryLin® STAINLESS STEEL

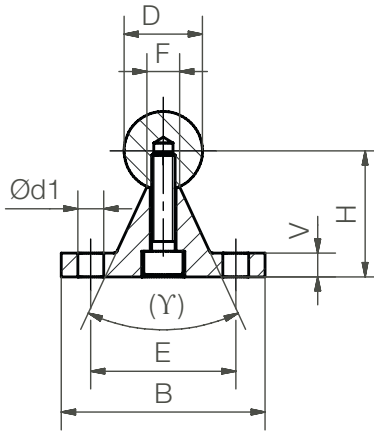

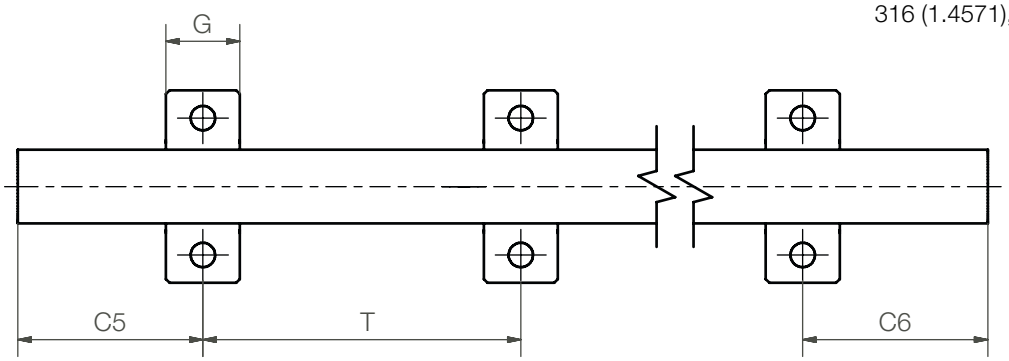

Order key

Type										Size	Length
EW	U	M	□	-	ES	-	20	-	2000		
Stainless steel shafts	Supported	Metric	Blank = 440C stainless S = 316 Stainless		300 series Stainless Shaft support					Outer Ø	Shaft length [mm] (hole pattern)

Shaft support blocks for Ø 20 mm made from stainless steel 300 series SS

- Connecting dimensions as standard supports made from aluminum

Available materials and shafts:

440C (1.4125), max. 6.000 mm ➤ EWUM
316 (1.4571), max. 3.000 mm ➤ EWUMS

Dimensions [mm]

Part No.		D	B	H	V	d1	E	ϒ	F	G	T1	C5/C6 for T1		T2	C5/C6 for T2	
440C (1.4125)	316 (1.4571)	h6		±0.02										Standard		
Hard stainless	Soft stainless											min.	max.		min.	max.
EWUM-ES-12	EWUMS-ES-12	12	40	22	5	4.5	29	–	5.8	14	75	20	57	120	20	79
EWUM-ES-16	EWUMS-ES-16	16	45	26	5	5.5	33	–	7.0	16	100	20	69	150	20	94
EWUM-ES-20	EWUMS-ES-20	20	52	32	6	6.6	37	50°	8.3	20	100	20	69	150	20	94
EWUM-ES-25	EWUMS-ES-25	25	57	36	6	6.6	42	–	10.8	25	150	20	79	200	20	119
EWUM-ES-30	EWUMS-ES-30	30	69	42	7	9.0	51	–	11.0	25	150	20	94	200	20	119
EWUM-ES-40	EWUMS-ES-40	40	73	50	8	9.0	55	–	15.0	25	200	20	119	300	20	169

Cutting T2 = standard, T1 on request

Order example:
EWUM-ES-20-500 for a partially supported stainless steel shaft, cutting T2 = standard , outer Ø 20 mm with length of 500 mm

DryLin® SLW - Product range - Trapezoidal thread

SLW-ES – stainless steel

- Stainless steel version with corrosion-resistant steel components 303 (1.4305), CF8M (1.4408) or 316 (1.4571)
- Choice of bearing material:
  iglide® J = Standard
  iglide® A180 = FDA
  iglide® T500 = High temperature up to +482°F (250°C)
- Available accessories ➤ **Page 1293**

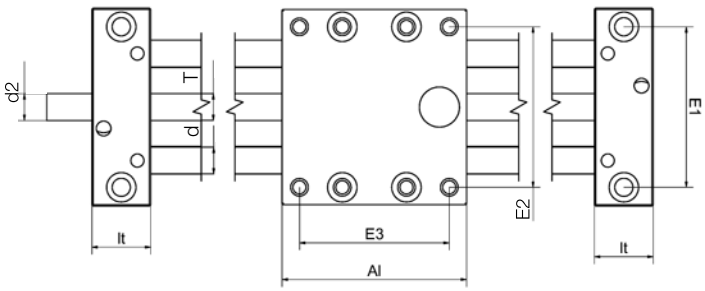

Order key complete ➤ Page 1274

Type	Size

SLW - ES J - 1040

Compact	Stainless steel	iglide® J bearing	Installation size

drylin® E compatible

Available as a motorized version
DryLin® E ➤ **Page 1317**

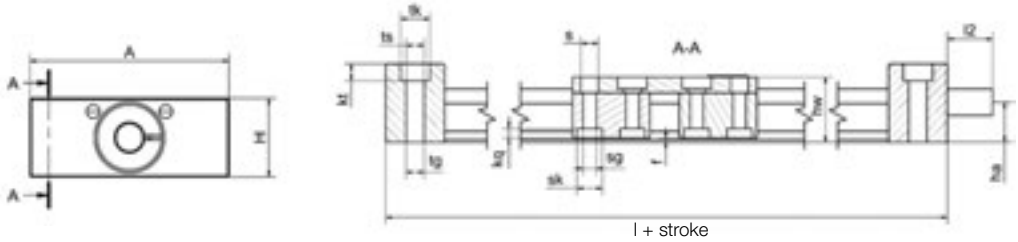

DryLin® STAINLESS STEEL

Technical data

Part No.	Shafts-Ø	Maximum stroke length	Weight	Additional (per 100 mm)	Maximum static load capacity	
	[mm]	[mm]	[kg]	[kg]	axial [N]	radial [N]
SLW-ESJ-1040	10	750	1.4	0.2	700	2,800
SLW-ESX-1040	10	750	1.4	0.2	700	2,800
SLW-ESA180-1040	10	750	1.4	0.2	700	2,800
SLW-ESJ-2080	20	1,000	5.7	0.64	1,600	6,400
SLW-ESA180-2080	20	1,000	5.7	0.64	1,600	6,400

Dimensions [mm]

Part No.	A –0.3	Al –0.3	H	E1 ±0.15	E2 ±0.15	E3 ±0.15	l	hw	f	lt ±0.1	tk	ts	tg
SLW-ES-1040	74	100	29	60	60	87	144	24	1.5	22	11	6.8	M8
SLW-ES-2080	134	150	46	116	116	132	206	44	1.5	28	15	8.6	M10

Part No.	kt ±0.1	s	sk	sg	kq	d	T	l2	d2 Standard	ha
SLW-ES-1040	6.4	6.6	9.5	M6	4.4	10	Tr10x2	17	Tr10x2[92)]	14.5
SLW-ES-2080	8.6	9.0	14	M8	5.5	20	Tr18x4	26	12h9	23.0

[92)] Lead screw end unmachined

DryLin® HTS - Product range - Trapezoidal and high-helix

HTSC-HYD – hygienic design

DryLin® STAINLESS STEEL

Order key
complete ➤ Page 1259

Type	Size	Shaft	Option
HTSC	- 20	- EWM	- HYD
Type: flexible	Installation size	Shaft material	Hygienic design

Based on the “hygienic design” idea, this version offers an easily cleaned solution. The screw connections are raised with no dirt traps, and any gaps are intentionally wide. The materials used are plastic and VA stainless steel.

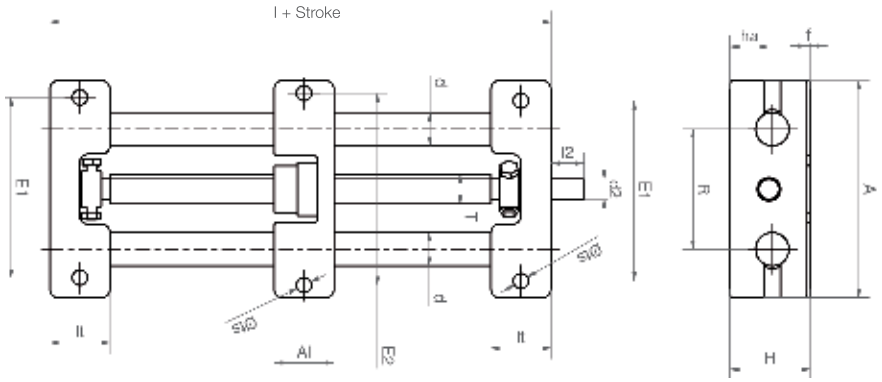

FDA

The lead screw unit can be supplied completely with FDA-compliant materials.

drylin® E compatible

Available as a motorized version
DryLin® E ➤ **Page 1317**

Dimensions [mm]

Part No.	A	Al	H	E1	E2	l	R	f	lt	ts	d	T	l2	d2	ha
	–0.3	–0.3		±0.15	±0.15										
HTSC-20-EWM-HYD	130	35	48	108	115	108	72	2	36	9.0	20	Tr18x4	26	12 h9	23

Available accessories ➤ **Page 1293**

HTSC-HYD can be assembled using the following bearing materials:

iglide® J
Standard up to +194°F (+90°C)

iglide® T500 (X)*
For temperatures up to +482°F (+250°C) and high chemical resistance

iglide® A180
For applications with food contact (FDA)

*X is the European equivalent material for iglide® T500

DryLin® SLW - Product range

SLW-XY-ES – compact XY-table – stainless steel

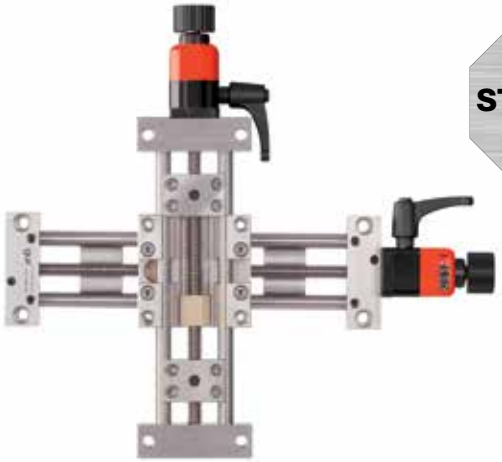

DryLin® STAINLESS STEEL

- For manual adjustments
- Flat and compact
- High torsional stability stiffness
- Structure entirely made from 300 series stainless steel materials
- 100 % lubrication free
- Chemical and corrosion resistant
- Available accessories ➤ **Page 1113**

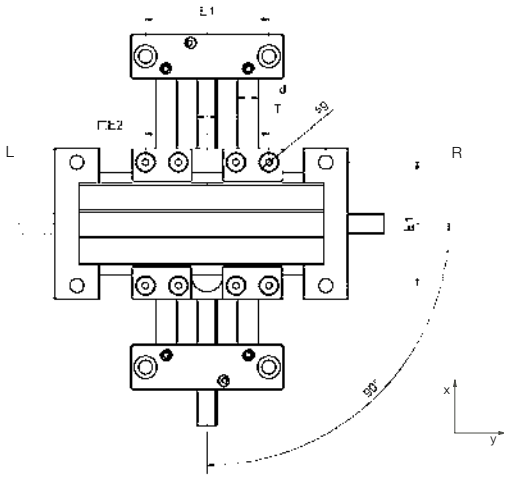

ly + Stroke in mm

left

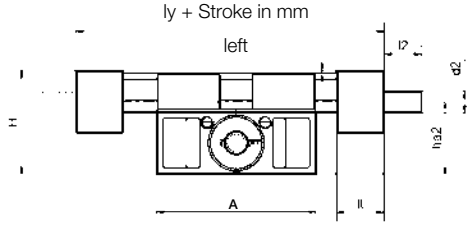

lx + Stroke in mm

right

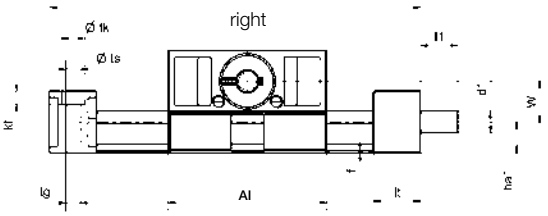

drylin E compatible

Available as a motorized version DryLin® E ➤ **Page 1317**

Dimensions [mm]

Part No.	Max. stroke length	A	Al	H	E1	E2	Base length	Base length	f	lt	tk	ts	tg	kt
	[mm]	–0.3			±0.15	±0.15	lx	ly			±0.1			
SLW-XY-ESJ-1040	300	74	73	48	60	60	117	117	1.5	22	11	6.8	M8	6.4

Dimensions [mm]

Part No.	sg	d	T	l1	d1	d1	l2	d2	d2	ha1	ha2	W
					Standard	Alternative		Standard	Alternative			ha2–ha1
SLW-XY-ESJ-1040	M6	10	Tr10x2	17	Tr10x2	6 h9	17	Tr10x2	6 h9	14.5	33.5	19

The hand wheel can be ordered left- or right-mounted in the y-direction.
Left: SLW-XY-ESJ-1040-L-200-300 for 200 mm stroke length on the x-axis and 300 mm on the y-axis
Right: SLW-XY-ESJ-1040-R-200-300 for 200 mm stroke length on the x-axis and 300 mm on the y-axis

7. DryLin®..

Lead screw technology

...plastics

DryLin® - Lead screw technology - Advantages

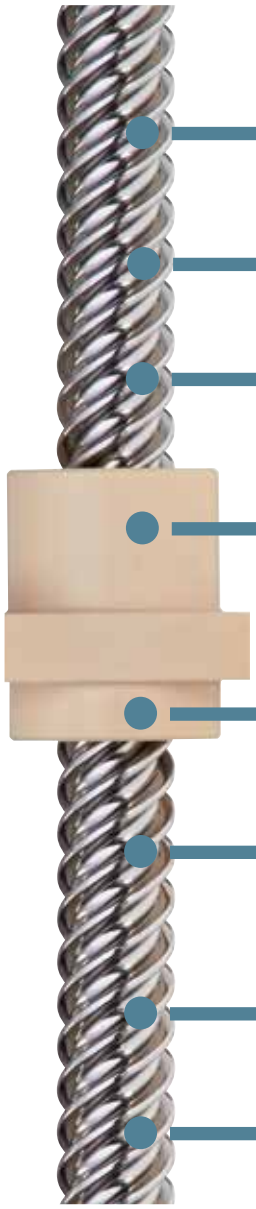

Extended lifetime due to asymmetry

Higher efficiency due to optimized thread angle

Best media resistance due to material 304 SS

Material selection: iglide® J (standard), iglide® A180 (FDA-compliant)

Lead screw nuts made from self-lubricating iglide® high performance plastics

Precision / nominal diameter -0.1

Low noise and vibration dampening due to rounded tooth geometry

Pitch 2–50 mm, diameter ø 6-18mm

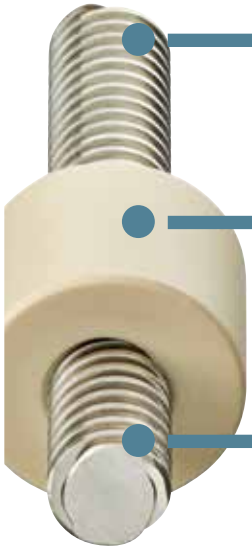

Self-locking trapezoidal metric and ACME threads

More than 100 dimensional options with up to 10 nut version in up to 5 different materials

Reduction in play through anti-backlash function (optional)

Self-lubricating DryLin® lead screw technology

Lead screws are a common technology used to convert rotary motion into linear motion, and are often used to provide actuation to a set of linear bearings. Plastic lead screw nuts are an excellent alternative to ball screws in many applications where extreme precision (micron level) is not required. They require no external lubricant, which makes them suitable in applications ranging from sensitive lab instruments to packaging machines.

- Efficient and durable dryspin high helix thread
- Self-locking trapezoidal and metric threads
- Maintenance-free dry running
- Low-noise
- Corrosion resistant
- Dirt resistant

Typical application areas:

- Lab automation
- Packaging machinery
- Automotive manufacturing
- Medical devices
- Material handling

Lifetime calculation online
www.igus.com/DryLin-expert

max. +356°F (+180°C)
min. -4°F (-20°C)

Available from stock
Detailed information about delivery time online.

According to EC Directive 2011/65/EU (RoHS 2) Restriction of (using certain) hazardous substances

DryLin® - Lead screw technology - Product overview

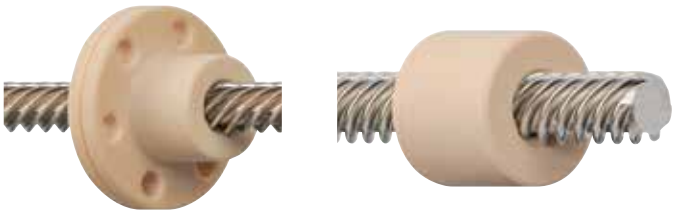

High helix threads with dryspin technology

- dryspin high helix screws made from stainless steel
- dryspin lead screw nuts flange or sleeve design
- Zero backlash option
- Inch and metric sizes

➤ **Page 1164**

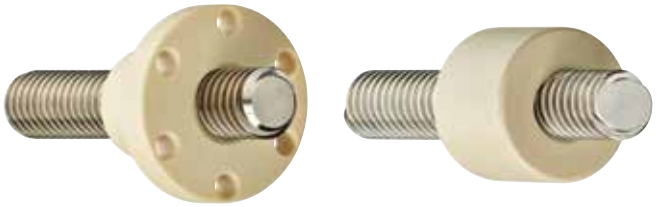

Trapezoidal, metric and ACME threads

- Lead screws made from steel, stainless steel and anodized aluminum
- Self-lubricating, self-locking lead screw nuts flange or sleeve design
- Anti-backlash available
- Lead screw nuts made from self-lubricating iglide® plastics for high temperatures, FDA/pharmaceutical industry, low cost

➤ **Page 1170**

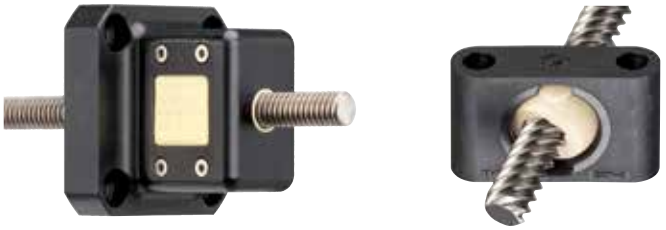

Special designs

- Lead screw nuts made from DryLin® linear modules, with flange or pillow block designs
- Split and spherical lead screws with housing
- Disc for customized clearance adjustment
- Fast-Forward quick release nut for fast adjustment

➤ **Page 1214**

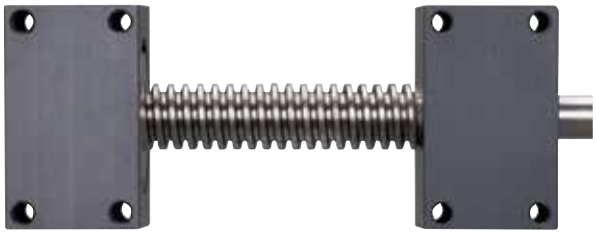

Lead screw technology accessories

- Nut housing for DryLin® lead screw nuts
- Anodized lead screw support blocks, with plain or ball bearings (for axial loads)
- Clamping ring for securing lead screw

➤ **Page 1222**

Further products with DryLin® lead screw technology

- DryLin® Drive Technology ➤ **Page 1229**
- DryLin® Lead Screw Motors ➤ **Page 1317**
- DryLin® Measuring Systems ➤ **Page 1129**

DryLin® - Lead screw technology - Application examples

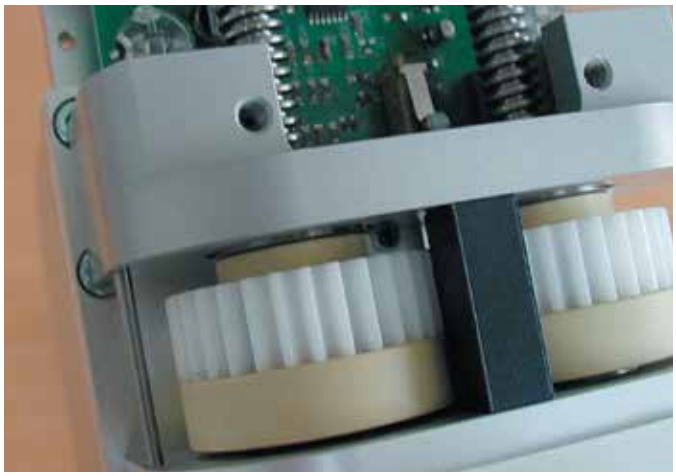

Two component mixing unit

Laser marking unit

Can opener: drive adjustment

Lab equipment: liquid handling

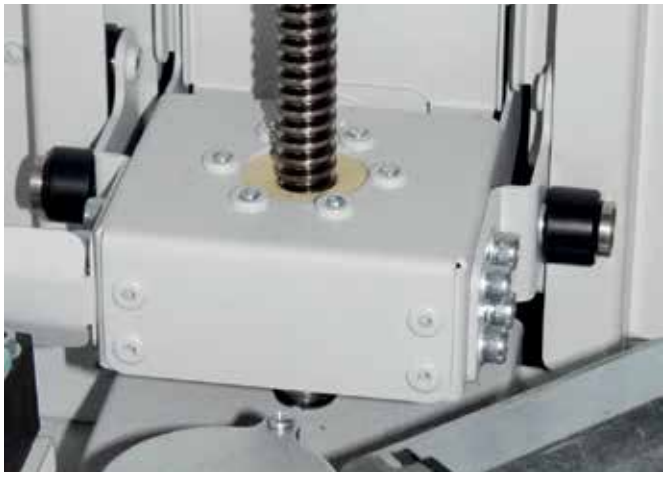

Lead screw nut in block valve

Book scanning

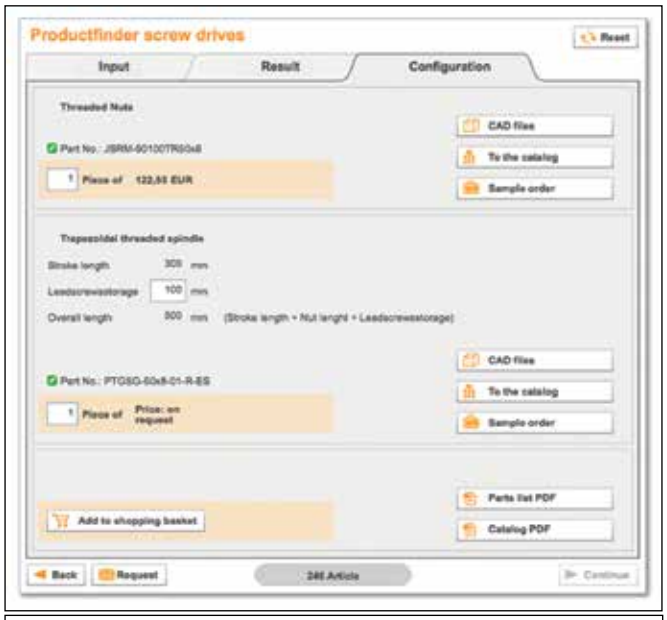

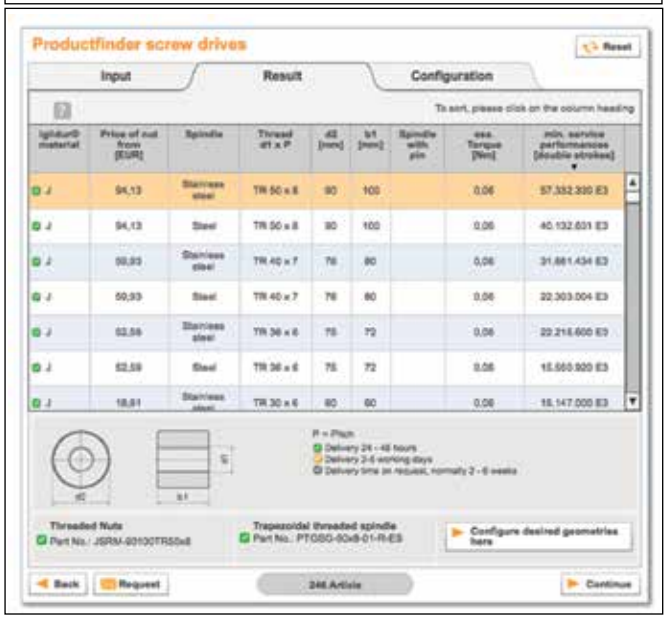

Calculate the service life of lead screw units online

A number of online tools, including configurators and service life calculators are available for DryLin® linear systems. Calculate required drive force and other technical details, and get direct access to CAD files and online ordering.

DryLin® - Lead screw technology - Product overview

High helix threads with dryspin technology

Lead screws

➤ Page 1164

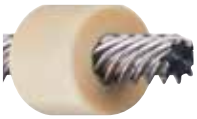

Lead screw nut, sleeve design

➤ Page 1165

Lead screw nut, with flange

➤ Page 1166

Lead screw nut, with compact flange

➤ Page 1167

Lead screw nut, zero backlash

➤ Page 1168

ACME lead screws and nuts

ACME Lead screws

➤ Page 1180

ACME lead screw nuts, sleeve or flange, made from iglide® A180

➤ Page 1184

ACME lead screw nuts, sleeve or flange, made from iglide® J

➤ Page 1184

ACME lead screw nuts, sleeve or flange, made from iglide® L280 (W300)*

➤ Page 1184

ACME lead screw nuts, sleeve or flange, made from iglide® J350

➤ Page 1184

ACME lead screw nuts, sleeve or flange, made from iglide® R

➤ Page 1184

Trapezoidal and metric threads

Anti-backlash lead screw nuts, cylindrical/with flange made from iglide® J

➤ Page 1194

Trapezoidal lead screw nuts with flange, made from iglide® J

➤ Page 1196

Lead screw nut with compact flange, made from iglide® J

➤ Page 1198

Two-start trapezoidal lead screw nuts, cylindrical/with flange, made from iglide® J

➤ Page 1200

Trapezoidal lead screw nuts, cylindrical/with flange, made from iglide® L280

➤ Page 1202

Trapezoidal lead screw nuts, cylindrical/with flange, made from iglide® R

➤ Page 1206

Special designs

Lead screw nuts from linear modules

➤ Page 1214

Lead screw nuts with locating spigot

➤ Page 1215

Split lead screw nuts, made from iglide® J

➤ Page 1216

Lead screw nuts with housing block

➤ Page 1217

Spherical trapezoidal lead screw nut with spherical ball in flanged bearing housing

➤ Page 1218

Spherical lead screw nut with spherical ball in pillow block bearing housing

➤ Page 1219

Lead screw technology accessories

Lead screw support blocks

➤ Page 1222

Lead screw nut housing

➤ Page 1224

Lead screw support with ball bearings

➤ Page 1226

DryLin® clamping ring

➤ Page 1227

DryLin® - Lead screw technology - Product overview

High helix threads without dryspin technology

High helix lead screws

➤ Page 1170

Cylindrical high helix nuts

➤ Page 1171

High helix lead screw nuts with flange

➤ Page 1172

Zero backlash lead screw nuts

➤ Page 1173

Trapezoidal and metric threads

Trapezoidal lead screws single/two start, aluminum, machined end

➤ Page 1186

LH/RH lead screws

➤ Page 1188

Metric lead screws

➤ Page 1189

Cylindrical trapezoidal lead screw nuts, made from iglide® J

➤ Page 1190

Lead screw nuts with spanner flat, made from iglide® J

➤ Page 1192

Miniature lead screw nuts cylindrical/with flange, made from iglide® J

Page 1193

Trapezoidal lead screw nuts, cylindrical/with flange, made from iglide® A180

➤ Page 1208

Trapezoidal lead screw nuts, cylindrical/with flange, made from iglide® J350

➤ Page 1210

DryLin®-Disc, made from iglide® J

➤ Page 1212

Quick-release nut Fast forward

➤ Page 1220

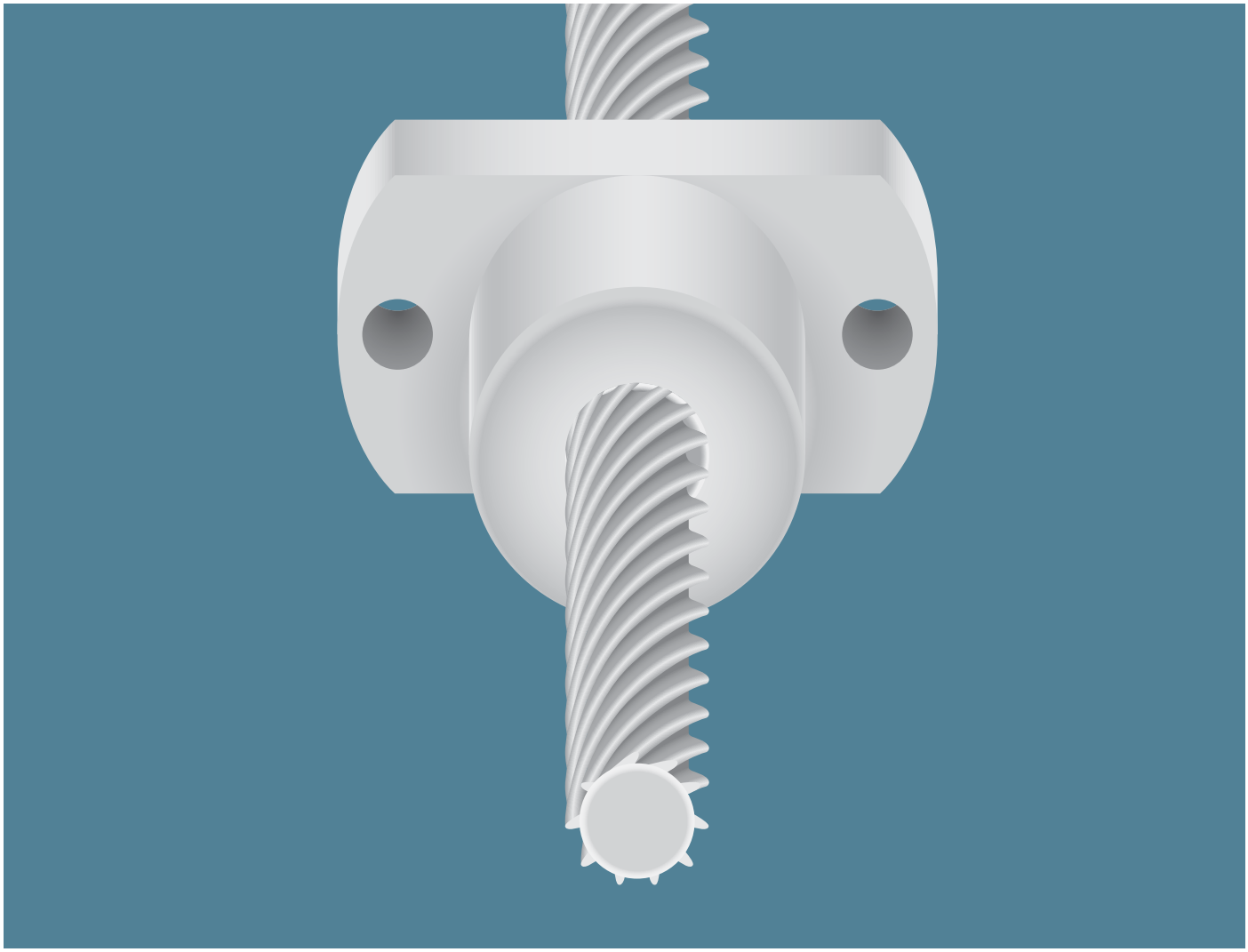

Dryspin Technology

- Self-lubricating high helix threads
- Higher efficiency
- Longer service life than other plastic nuts
- Excellent corrosion and chemical resistance
- Quiet operation / vibration dampening
- Resistant to dirt

DryLin® - Lead screw technology - Technical data

Low noise and vibration dampening due to rounded tooth geometry

Due to the rounded tooth design, the contact surface between the lead screw nut and the lead screw is reduced. Therefore the dryspin lead screw nuts move without vibration, virtually silent. This is because the greater the contact of two surfaces moving against one another, the more vibrations are transmitted, which can be perceived as a rattle or squeak. The rounded form minimizes this effect and the thread moves without lubrication and with little noise.

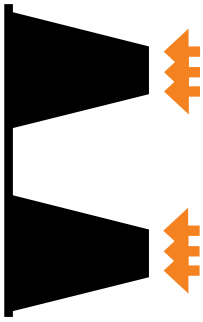

Angular tooth profile,
standard geometry

Round tooth profile,
dryspin geometry

Extended service life due to asymmetry

Due to the larger distances between the individual dryspin thread pitches, the thread perfectly matches the properties of the self-lubricating igus® high performance plastics. The proportion of the tribologically optimized plastic in the thread pitch is increased in all sizes by a factor of 1.3 compared to other lead screw geometries. More wear-resistant material and higher levels of efficiency are crucial for up to 5 times higher service life of standard geometries. The larger the lead screw diameter the bigger the impact of this effect. Backlash can be minimized by the use of dryspin zero-backlash threaded nuts with integrated spring pretension.

Symmetric
standard geometry

Asymmetric
dryspin geometry

Better efficiency due to optimized thread angle

Due to a flatter thread angle of about 30°, in dryspin high helix lead screws (similar to a trapezoidal or ACME thread) the applied force is efficiently converted into a linear motion. Compared with a steeper thread angle, this means less power loss and more efficiency.

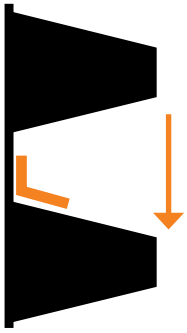

Steeper thread angle,
standard geometry

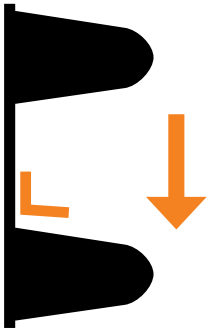

Flatter angle,
dryspin geometry

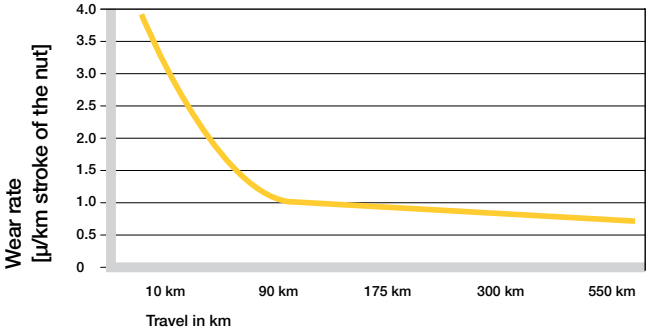

Wear test dryspin high helix thread
10x25, load 175 N, 540 mm stroke, 125 rev/min

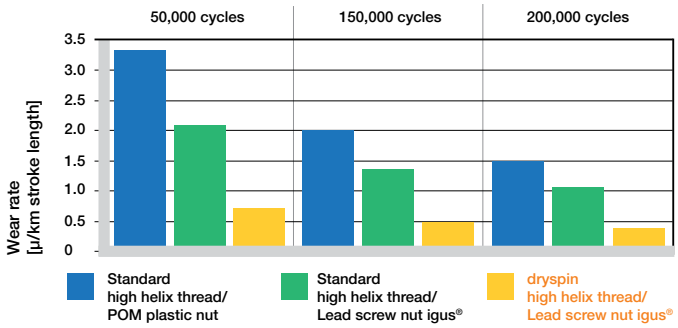

Wear test high helix thread 10x50,
dryspin high helix thread / standard high helix thread
Load 36 N , 100 rev/min at 50,000/150,000/200,000 cycles

DryLin® - Lead screw technology - Technical data

Tested:
Self-lubricating iglide® materials from igus®

Liners, sliding parts and lead screw nuts from DryLin® adapted for your application.
Self-lubricating – tested – predictable

- 15,000 tribology tests per year
- More than 300 parallel test machines
- 140 trillion test movements
- Continuous testing of DryLin® guides

➤ **www.igus.com/leadscrew-test**

View of the igus® plain bearings laboratory

Test rig for service life determination

dry-tech plastics

igus® high performance plastics are used in all DryLin® linear and drive units as well as lead screw drives. The dry lubricant is incorporated into the bearing material, rendering the bearing materials suitable for dry-running conditions. In other words, they are maintenance-free for their entire service life.

Material selection

DryLin® lead screw nuts are made from tribologically optimized materials.

iglide® J is characterized by the best friction values with low moisture absorption.
➤ **www.igus.com/J**

iglide® A180 corresponds to the requirements of the Food and Drug Administration (FDA) and can therefore be used in direct contact with food.
➤ **www.igus.com/A180**

Service life

Every year, several hundred tests are set up and performed on test rigs in the igus® test laboratory. The results are incorporated into online tools, where the service life and the required torque can be determined.

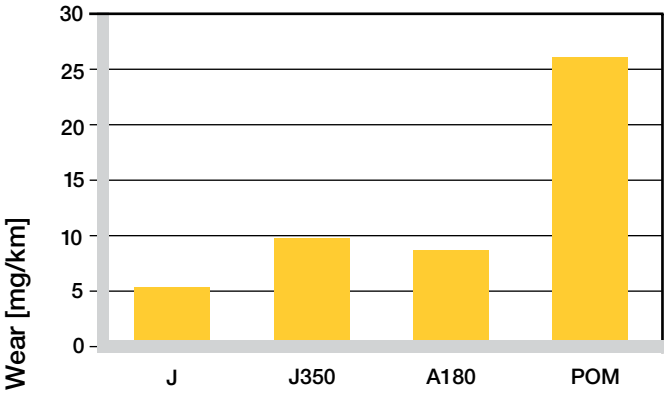

Wear test on C15 lead screw drive [mg/km]
Stroke 140 mm, 50 N, lead screw C15 rolled, 450 rev/min

DryLin® - Lead screw technology - Product range

Corrosion-resistant, made from material 304 stainless steel (1.4301) – Precision / nominal dimension -0.1

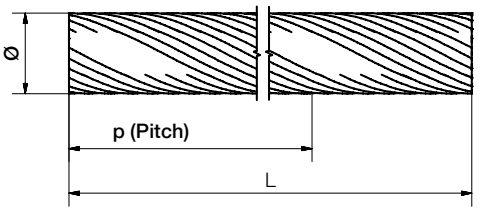

Order key

Part number	Thread dimension	Options

DST-LS-10x50-R-xx-ES

dryspin technology	Lead screw	Outer Ø [mm]	Pitch P [mm]	Hand of rotation	Length	Lead screw material

Options
Length in [mm]
Any value up to maximum, see product range

Dimensions [mm]

Part No.	Thread	Ø	Pitch P	Max. length L
DST-LS-6.35x2.54-R-ES	Ds6.35x2.54	6.35	2.54	1,000
DST-LS-6.35X5.08-R-ES	Ds6.35x5.08	6.35	5.08	1,500
DST-LS-6.35X12.7-R-ES	Ds6.35x12.7	6.35	12.7	1,500
DST-LS-6.35x25.4-R-ES	Ds6.35x25.4	6.35	25.4	1,000
DST-LS-10x12-R-ES	Ds10x12	10	12	3,000
DST-LS-10x25-R-ES	Ds10x25	10	25	3,000
DST-LS-10x25-L-ES	Ds10x25	10	25	3,000
DST-LS-10x50-R-ES	Ds10x50	10	50	3,000
DST-LS-10x50-L-ES	Ds10x50	10	50	3,000
DST-LS-14x25-R-ES	Ds14x25	14	25	3,000
DST-LS-14x30-R-ES	Ds14x30	14	30	3,000
DST-LS-16x35-R-ES	Ds16x35	16	35	3,000
DST-LS-18x40-R-ES	Ds18x40	18	40	3,000
DST-LS-18x80-R-ES	Ds18x80	18	80	3,000
DST-LS-20X60-R-ES	Ds20x60	20	60	3,000
DST-LS-20X90-R-ES	Ds20x90	20	90	3,000

DryLin® - Lead screw technology - Product range

Cylindrical design, made from iglide® J

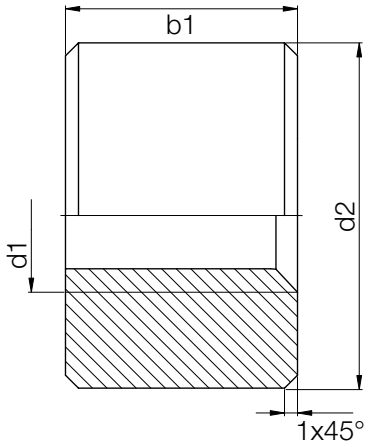

Order key

Part number	d2	b1	Thread
DST-JSRM-1413DS10x12			

dryspin technology	iglide® J	Form S	Right-hand thread	Metric	Outer Ø [mm]	Length [mm]	Thread type	Thread Ø [mm]	Pitch P [mm]

Technical data and dimensions [mm]

Part No.	Thread	d1	d2	b1	Effective supporting surface [mm²]	Max. stat. F axial [N]
DST-JSRM-1413DS6.35x2.54	Ds6.35x2.54	6.35	14	13	172	152
DST-JSRM-1413DS6.35X5.08	Ds6.35x5.08	6.35	14	13	201	152
DST-JSRM-1413DS6.35X12.7	Ds6.35x12.7	6.35	14	13	–	–
DST-JSRM-1413DS6.35x25.4	Ds6.35x25.4	6.35	14	13	75	152
DST-JSRM-2220DS10x12	Ds10x12	10	22	20	302	755
DST-JSRM-2220DS10x25	Ds10x25	10	22	20	249	623
DST-JSLM-2220DS10x25	Ds10x25	10	22	20	249	623
DST-JSRM-2220DS10x50	Ds10x50	10	22	20	146	365
DST-JSLM-2220DS10x50	Ds10x50	10	22	20	146	365
DST-JSRM-3027DS14x25	Ds14x25	14	30	27	448	1,120
DST-JSRM-3027DS14x30	Ds14x30	14	30	27	373	932
DST-JSRM-3632SD16x35	Ds16x35	16	36	32	680	1,700
DST-JSRM-4036DS18x40	Ds18x40	18	40	36	802	2,005
DST-JSRM-4036DS18x80	Ds18x80	18	40	36	601	1,503
DST-JSRM-4540DS20X60	Ds20x60	20	45	40	1,023	2,557
DST-JSRM-4540DS20X90	Ds20x90	20	45	40	682	1,705

DryLin® - Lead screw technology - Product range

With flange, made from iglide® J

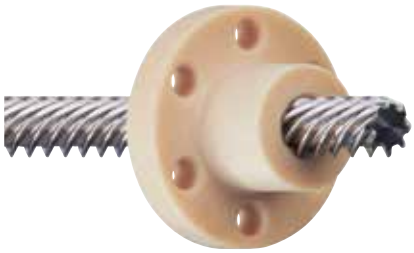

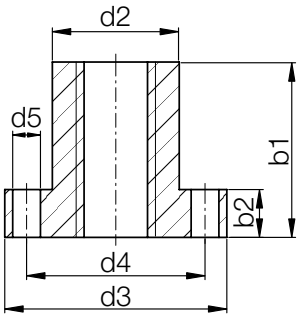

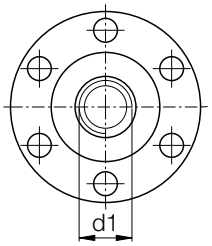

Order key

Part number	d2	b1	Thread
DST-J F R M -2525DS10x12			

dryspin technology	iglide® J	Form F	Right-hand thread	Metric	Outer Ø [mm]	Length [mm]	Thread type	Thread Ø [mm]	Pitch P [mm]

Technical data and dimensions [mm]

Part No.	Thread	d1	d2	d3	d4	d5	b1	b2	Effective supporting surface [mm²]	Max. stat. F axial [N]
DST-JFRM-1315DS6.35x2.54	Ds6.35x2.54	6.35	13	25	15	3.2	15	5	199	125
DST-JFRM-1315DS6.35x25.4	Ds6.35x25.4	6.35	13	25	15	3.2	15	5	87	125
DST-JFRM-2525DS10x12	Ds10x12	10	25	42	34	5	25	10	377	943
DST-JFRM-2525DS10x25	Ds10x25	10	25	42	34	5	25	10	311	778
DST-JFRM-2525DS10x50	Ds10x50	10	25	42	34	5	25	10	183	458
DST-JFRM-2835DS14x25	Ds14x25	14	28	48	38	6	35	12	581	1,452
DST-JFRM-2835DS14x30	Ds14x30	14	28	48	38	6	35	12	484	1,210
DST-JFRM-2835DS16x35	Ds16x35	16	28	48	38	6	35	12	680	1,700
DST-JFRM-2835DS18x40	Ds18x40	18	28	48	38	6	35	12	779	1,947
DST-JFRM-2835DS18x80	Ds18x80	18	28	48	38	6	35	12	584	1,460

DryLin® - Lead screw technology - Product range

With compact flange, made from iglide® J

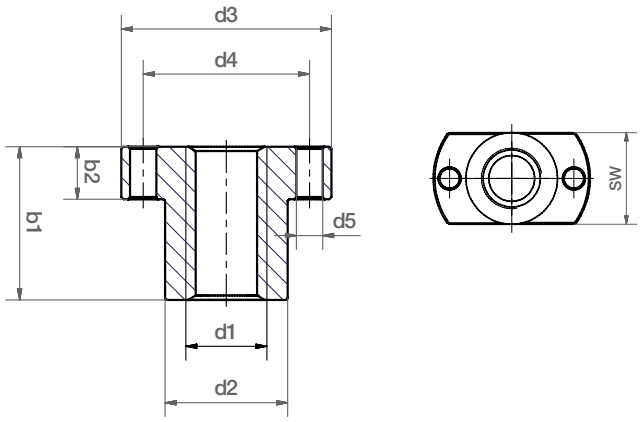

Order key

Part number	SW	b2	b1	Thread
DST-JFRM-252525DS10x12				

dryspin technology	iglide® J	Form F	Right-hand thread	Metric	Width across flats: [mm]	Outer Ø [mm]	Length Ø [mm]	Thread type		Pitch P [mm]

Technical data and dimensions [mm]

Part No.	Thread	d1	SW	d2	d3	d4	d5	b1	b2	Effective supporting surface [mm²]	Max. stat. F axial [N]
DST-JFRM-131315DS6.35x2.54	Ds6.35x2.54	6	13	13	25	19	3.2	15	5	199	125
DST-JFRM-131315DS6.35x25.4	Ds6.35x25.4	6	13	13	25	19	3.2	15	5	87	125
DST-JFRM-252525DS10x12	Ds10x12	10	25	25	42	34	5	25	10	377	943
DST-JFRM-252525DS10x25	Ds10x25	10	25	25	42	34	5	25	10	311	778
DST-JFRM-252525DS10x50	Ds10x50	10	25	25	42	34	5	25	10	183	458
DST-JFRM-282835DS14x25	Ds14x25	16	28	28	48	38	6	35	12	571	1,428
DST-JFRM-282835DS14x30	Ds14x30	16	28	28	48	38	6	35	12	570	1,425

DryLin® - Lead screw technology - Product range

Zero backlash, for life-long minimum backlash made from iglide® J

Order key

Part number	Type	Thread
DST-J F R M -ZB-0001 -DS10x12		

dryspin technology	iglide® J	Form F	Right-hand thread	Metric	Zero backlash	Type 0001	Thread type	Thread Ø [mm]	Pitch P [mm]

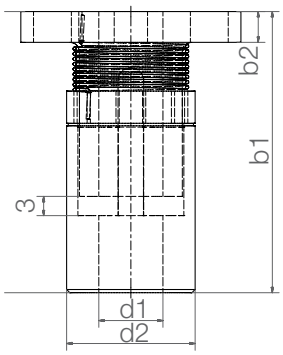

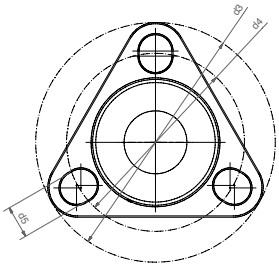

Dimensions [mm]

Part No.	Thread	d1	d2	d3	d4	d5	b1[40]	b2
DST-JFRM-ZB-0001-DS6.35x2.54	Ds6.35x2.54	6.35	13.5	28	22.2	3.7	31-36	4.1
DST-JFRM-ZB-0001-DS6.35x25.4	Ds6.35x25.4	6.35	13.5	28	22.2	3.7	31-36	4.1
DST-JFRM-ZB-0001-DS10X12	Ds10x12	10	20	38.1	28.3	5.2	41-47	4.8
DST-JFRM-ZB-0001-DS10X25	Ds10x25	10	20	38.1	28.3	5.2	41-47	4.8
DST-JFRM-ZB-0001-DS10X50	Ds10x50	10	20	38.1	28.3	5.2	41-47	4.8

[40] Variable according to thread pitch / clearance

Installation instructions and video tutorials
➤ www.igus.com/zero-backlash

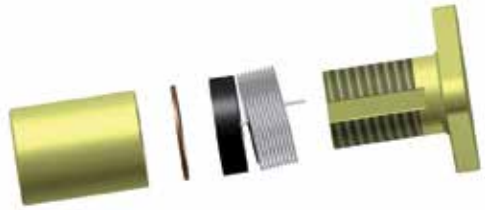

DryLin® - Lead screw technology - Product range

Accessories for dryspin technology

igus® offers a large design kit for dryspin lead screw units. Bearing housing for lead screws and lead screw nuts enable the design of an individual linear table. With DryLin® E NEMA lead screw motors, dryspin combines the highest precision with a longer service life.

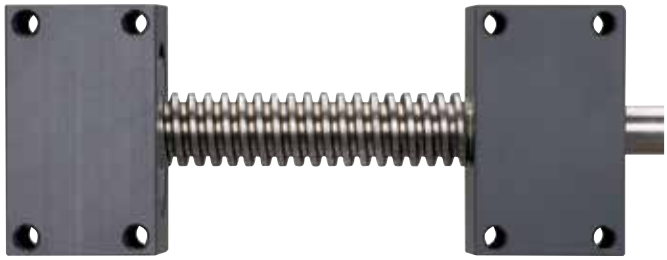

Lead screw support blocks

- Lead screw support block including clamping rings and self-lubricating plain bearings
- Material: anodized aluminum
- Fixed and floating bearing version available

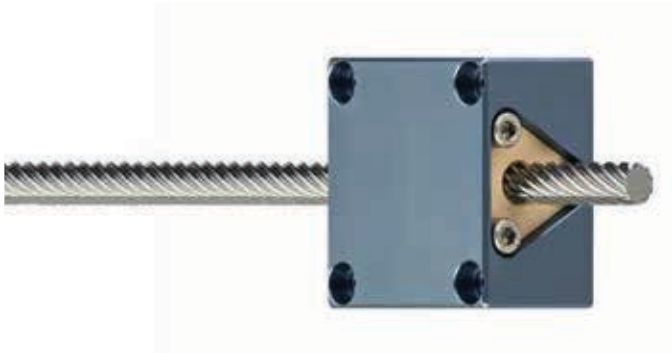

Lead screw nut housing

- Universal support for dryspin flange lead screw nut
- Material: anodized aluminum
- Available individually or pre-assembled

DryLin® E lead screw motor with dryspin technology

- NEMA 11/17/23 stepper motors
- Lead screw connected directly to motor for space savings
- Many combination options

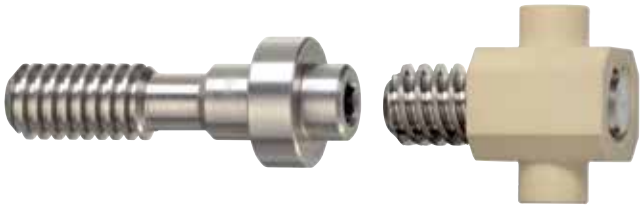

Special components

- Online custom machining and configuration

DryLin® - Lead screw technology - Product range

High helix lead screws without dryspin technology

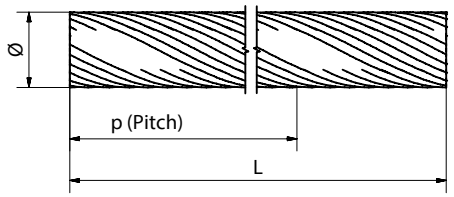

Straightness 0.3 mm / 300 mm

Order key

Part number	Thread	Options

PTGSG-08x10-R-1000-ES

Lead screw	Diameter	Pitch	Right-hand thread	Length [mm]	Stainless steel

Options:
R = Right-hand thread
L = Left-hand thread
Length in mm = freely selectable (see table)
ES = Stainless steel (standard)

High helix lead screws - Dimensions [mm]

Part No.	Thread	Ø	Pitch	Max. length
PTGSG-05x5-R-[ ][42]-ES	Sg05x5	5.4	5	1,000
PTGSG-06.35x12.7-R-[ ][42]-ES	Sg06.35x12.7	6.4	12.7	1,000
PTGSG-08x10-R[41]-[ ][42]-ES	Sg08x10	8.2	10	1,500
PTGSG-08x15-R-[ ][42]-ES	Sg08x15	8.0	15	1,500
PTGSG-10x12-R[41]-[ ][42]-ES	Sg10x12	10.0	12	3,000
PTGSG-10x50-R[41]-[ ][42]-ES	Sg10x50	10.0	50	3,000
PTGSG-12x25-R[41]-[ ][42]-ES	Sg12x25	11.9	25	3,000
PTGSG-18x24-R[41]-[ ][42]-ES	Sg18x24	18.7	24	3,000
PTGSG-18x100-R[41]-[ ][42]-ES	Sg18x100	18.8	100	3,000

[41] also available with left-hand thread "-L", [42] Length in mm

All DryLin® leads screws can be custom machined. Please send us your drawing. We can then provide a quotation quickly. We would like to offer you a quotation for your special lead screws.

DryLin® - Lead screw technology - Product range

Cylindrical high helix sleeve nuts without dryspin technology made from iglide® J

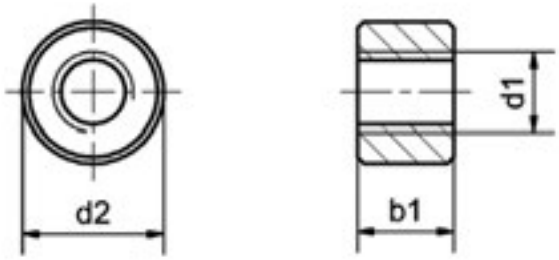

Order key

Part number					Dimension		Thread	
J	S	L	M	-	18	12	SG08x10	
Material	Form S	Left-hand thread	Metric		d2	b1	High helix thread	Diameter	Pitch

Options:
R = Right-hand thread
L = Left-hand thread

Dimensions [mm]

Part No. Right-hand thread	Effective supporting surface [mm²]	d2	b1	Thread d1 x P	Max. stat. F [N]
JSRM-1413SG05x5	132	14	13	Sg05x5	100 [43]
JSRM-1413SG06.35x12.7	89	14	13	Sg06.35x12.7	100 [43]
JSRM-1812SG08x10	139	18	12	Sg08x10	275 [43]
JSRM-1812SG08x15	110	18	12	Sg08x15	275
JSRM-2215SG10x12	195	22	15	Sg10x12	488
JSRM-2215SG10x50	106	22	15	Sg10x50	265
JSRM-2220SG10x12	260	22	20	Sg10x12	650
JSRM-2220SG10x50	142	22	20	Sg10x50	355
JSRM-2624SG12x25	260	26	24	Sg12x25	650
JSRM-3027SG18x24	730	30	27	Sg18x24	1,825
JSRM-3027SG18x100	385	30	27	Sg18x100	963
JSRM-4027SG18x100	385	40	27	Sg18x100	963
JSRM-4036SG18x100	514	40	36	Sg18x100	1,285
Left-hand thread	[mm²]			d1 x P	[N]
JSLM-1812SG08x10	139	18	12	Sg08x10	275 [43]
JSLM-2215SG10x12	195	22	15	Sg10x12	488
JSLM-2215SG10x50	106	22	15	Sg10x50	265
JSLM-2220SG10x12	260	22	20	Sg10x12	650
JSLM-2220SG10x50	142	22	20	Sg10x50	355
JSLM-3027SG18x100	385	30	27	Sg18x100	963
JSLM-4027SG18x100	385	40	27	Sg18x100	963
JSLM-4036SG18x100	514	40	36	Sg18x100	1,285

[43] Reduced axial load due to nut geometry
Other thread sizes, nut geometries and higher loads upon request

DryLin® - Lead screw technology - Product range

High helix lead screw nuts with flange without dryspin technology
Right/Left-hand thread, made from iglide® J

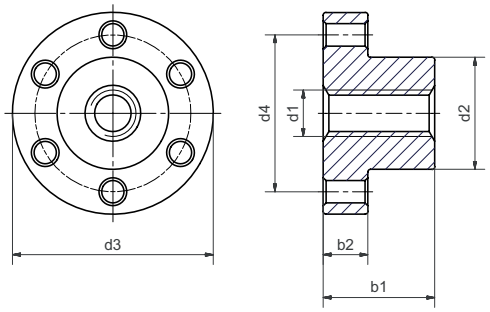

Order key

Part number				Dimension		Thread	
J	F	L	M	- 20	20	SG08x10	
Material	Form F	Left-hand thread	Metric	d2	b1	High helix thread	Diameter	Pitch

Options:
R = Right-hand thread
L = Left-hand thread

Dimensions [mm]

Part No. Right-hand thread	Effective supporting surface [mm²]	d2	d3	d4	d5	b1	b2	Thread d1 x P	Max. stat. F [N]
JFRM-1315SG05x5	152	13	25	19	3	15	5	Sg05x5	100 [43]
JFRM-1315SG06.35x12.7	107	13	25	19	3	15	5	Sg06.35x12.7	100 [43]
JFRM-2020SG08x10	232	20	34	28	4	20	5	Sg08x10	458 [43]
JFRM-2020SG08x15	183	20	34	28	4	20	5	Sg08x15	458
JFRM-2525SG10x12	324	25	42	34	5	25	10	Sg10x12	810
JFRM-2525SG10x50	177	25	42	34	5	25	10	Sg10x50	443
JFRM-2835SG12x25	337	28	48	38	6	35	12	Sg12x25	843
JFRM-2835SG18x24	945	28	48	38	6	35	12	Sg18x24	2,363
JFRM-2835SG18x100	500	28	48	38	6	35	12	Sg18x100	1,250
Left-hand thread									
JFLM-2020SG08x10	232	20	34	28	4	20	5	Sg08x10	458 [43]
JFLM-2525SG10x12	324	25	42	34	5	25	10	Sg10x12	810
JFLM-2525SG10x50	177	25	42	34	5	25	10	Sg10x50	443
JFLM-2835SG12x25	337	28	48	38	6	35	12	Sg12x25	843
JFLM-2835SG18x24	945	28	48	38	6	35	12	Sg18x24	2,363
JFLM-2835SG18x100	500	28	48	38	6	35	12	Sg18x100	1,250

[43] Reduced axial load due to nut geometry
Other thread sizes, nut geometries and higher loads upon request

DryLin® - Lead screw technology - Product range

Zero backlash lead screw nuts without dryspin technology
Right-hand thread, made from iglide® J

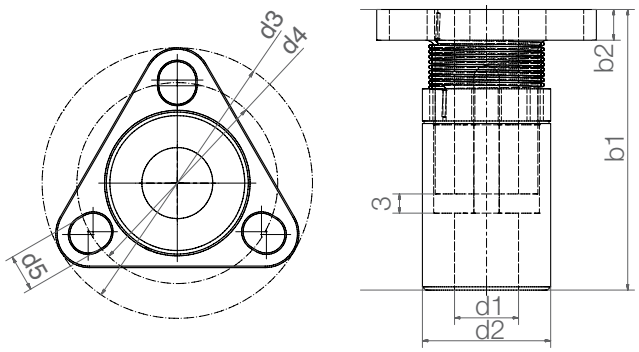

Order key

Part number					Type	Thread		
J	F	R	M	-ZB-	0001	HH10x2		
Material	Form F	Right-hand thread	Metric	Zero backlash	Series	Trapezoidal thread	Diameter	Pitch

Dimensions [mm]

Part No.	d1	d2	d3	d4	d5	b1[40]	b2	Thread d1xP
JFRM-ZB-0001-HH05x5	5.3	13.5	28	22.2	3.7	31-35	4.1	Sg05x5
JFRM-ZB-0001-HH06.35x12.7	6.35	13.5	28	22.2	3.7	31-35	4.1	Sg06.35x12.7
JFRM-ZB-0001-HH08x10	8	20	38.1	28.3	5.2	41-47	4.8	Sg08x10
JFRM-ZB-0001-HH08x15	8	20	38.1	28.3	5.2	41-47	4.8	Sg08x15
JFRM-ZB-0001-HH10x12	10	20	38.1	28.3	5.2	41-47	4.8	Sg10x12
JFRM-ZB-0001-HH10x50	10	20	38.1	28.3	5.2	41-47	4.8	Sg10x50

[40] Variable according to thread pitch / clearance
Custom sizes upon request
Can be combined with high helix lead screws ➤ Page 996

Installation instructions and video tutorials
➤ www.igus.com/zero-backlash

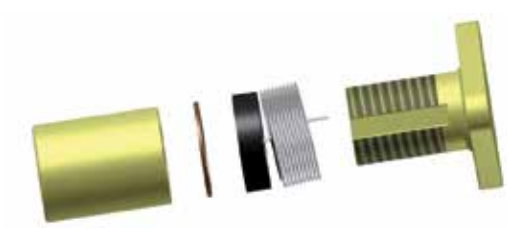

Trapezoidal, Metric and ACME threads

- Self-locking trapezoidal, metric and ACME threads
- Maintenance-free dry operation
- Very efficient
- Low noise
- Resistant to dirt and dust
- Corrosion-free

DryLin® - Lead screw technology - Technical data

Radial forces

DryLin® lead screw nuts are designed to absorb axial forces. Any radial forces that may occur in the application should be absorbed by additional linear guides.

➤ DryLin® linear guides, **from page 897**

Temperature

DryLin® lead screw nuts, which are manufactured from maintenance free iglide® materials, are suited for use in temperatures ranging from -40°F to +194°F (–20°C to +90°C) [302°F (150°C), depending on material]. Please note that the temperature also has an effect on the clearance of the nut, as well as the maximum load capacity. When the application is exposed to particularly low or high temperatures, we recommend testing the suitability of the lead screw nut under these conditions. In order to provide for the use in all temperature ranges, we offer lead screw nuts in various clearance classes.

Wet applications

Trapezoidal and ACME lead screw nuts from iglide® J or iglide® A180 materials are recommended for use in humid environments, especially for wet applications. These material are characterized by very low moisture absorption.

➤ iglide® J, **page 115**

➤ iglide® A180, **page 423**

Dirt

DryLin® lead screw drives feature completely dry-running operation. By avoiding lubricants, the adhesion of soft particles, such as dust and fibers is reduced. When compared to conventional, lubricated materials, this leads to significant improvements of the service life in contaminated environments. However, in environments with significant contamination and hard particles, such as metal chips or granite dust, the lead screw should be covered.

Lead screw drive inspection

DryLin® trapezoidal lead screw drives are manufactured in accordance with DIN 103. Inspection is performed with standard thread plug gauges after production. The DIN 103 standard is converted to the corresponding size for any thread sizes that are not shown in the standard table. The hygroscopic and thermal properties of the material must be taken into account during selection. Dimensional changes can occur as a result of moisture and/or thermal exposure at the point of use. For these reasons, general DIN-compatibility cannot be guaranteed. ACME nuts are produced to 2C.

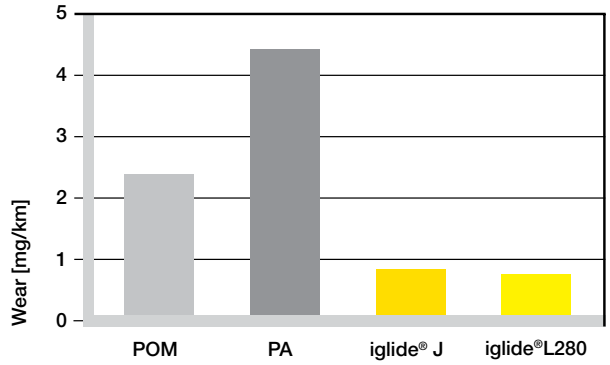

Diagram 01: Wear test on a rolled trapezoidal lead screw comparing iglide® plastics to simple plastics

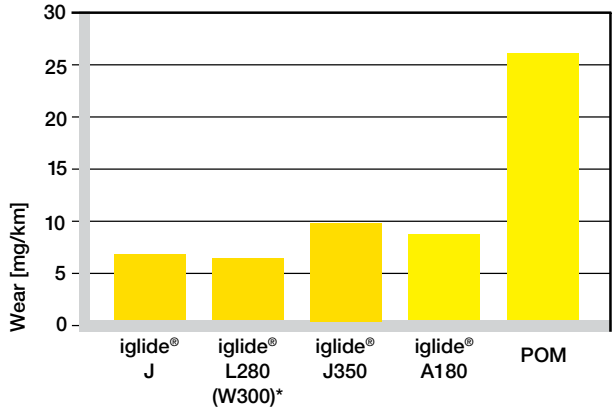

Diagram 02: Wear test on C15 lead screw drive [mg/km] Stroke 140 mm, 50 N, Carbon steel lead screw (C15) , 450 rev/min

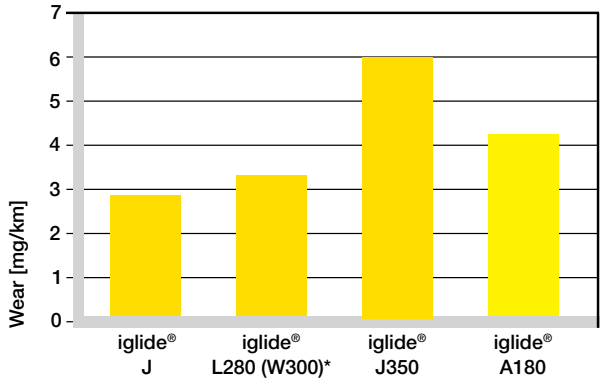

Diagram 03: Wear test on a 300 series stainless steel (VA) lead screw [mg/km] Stroke 140 mm, 50 N, Carbon steel lead screw (C15), 450 rev/min

***W300 is the European material equivalent for iglide® L280**

Noise

Noise can generally occur with the use of lead screw drives. In particular, long lead screws and long travel distances can cause self-induced vibrations in the systems, particularly in vertical applications.

Due to their good sliding characteristics, lead screw nuts from the tribologically optimized iglide® materials tend to develop less noise than conventional plastics or metallic materials, such as bronze or brass. If your gliding lead screw drive develops noise, please contact us to discuss this with our experts.

➤ Anti backlash nut, **page 1194**.

Clearance

The reliable operation of lead screw drives requires a basic amount of clearance. Application specific parameters must be observed in addition to the screw drive clearance caused by manufacturing tolerances. In addition to thermal and hygroscopic environmental influences, the minimum clearance to be accounted for in the application must also take into account the friction heat generated by the application. The use of gliding lead screw drives is therefore not recommended for precision drives without conducting practical tests. In practice, pre-tensioning has proven to be an effective counter-measure for undesirable clearance. In addition to the solutions from our standard product range, our technical support team will be pleased to discuss other options.

Efficiency

Efficiency is the ratio between the output and input power rating. DryLin® lead screw nuts are characterized by low friction values, resulting in high efficiencies.

Single start trapezoidal and ACME lead screw nuts achieve efficiencies between 20 and 48% under dry running conditions.

High helix lead screw nuts achieve efficiencies between 50 and 80% under dry running conditions.

Even though DryLin® lead screw nuts were developed for completely dry running conditions, lubrication can help to additionally increase efficiency.

Anti-backlash lead screw nuts in a glue application system of a seam gluing machine (wood industry). These ensure the required precision for this clearance-free adjustment drive.

Format adjustment in the paper industry with anti-backlash lead screw nut

Self locking

Single start trapezoidal and ACME lead screw drives are self-locking. This means that the thread angle and the sliding friction prevent movement of the nut or the lead screw without the application of outside forces. As soon as the static friction is exceeded, the components are no longer self-locking. Multi-start trapezoidal screw drives have a “residual self-locking” feature; high helix screw drives have no self-locking feature.

Anti backlash lead screw nuts

Backlash is the phenomenon created in the lead screw drives by the axial clearance. By means of a radial pretensioning vibrations (often the cause of noises, especially with long spindles and high speed) are significantly reduced. DryLin® offers several variations of both anti-backlash and preloaded nuts.

DryLin® - Lead screw technology - Technical data

Lead screw nut assembly

DryLin® lead screw nuts must be secured against twisting and sag.

Flanged lead screw nuts

The maximum tightening torque for the assembly of flanged lead screw nuts is 2.5 Nm. We recommend that assembly screws are secured with a semi permanent thread locking glue. Metallic ferrules should be used for even higher tightening torques.

Cylindrical lead screw nuts

The outer diameter of cylindrical lead screw nuts is not designed for a press fit. We therefore recommend the use of keyways. In practice, a screw mount has proven to be effective with low forces. Gluing lead screws nuts is not recommended. However, if the lead screw nuts must be glued into place, suitable tests need to be performed.

Assembly of zero backlash lead screw nuts

❶ Nut ❷ Adjusting ring with torsion spring
❸ Friction disc ❹ Counter nut

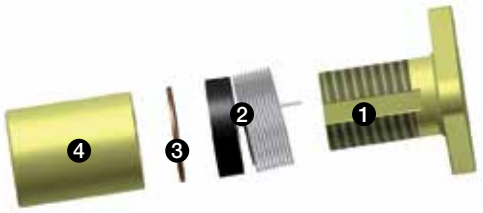

Screw the adjusting ring with the spring ❷ approx. half-way onto the nut ❶ and fix the ends of the spring in the corresponding holes.

Continue to screw the adjusting ring onto the nut until the end to tension the torsion spring.

Slide the friction disc ❸ and the counter nut ❹ over the adjusting ring. Please ensure that the adjusting ring does not rotate.

Press nut ❶ and counter nut ❹ against each other and screw in the lead screw. Make sure that the adjusting ring maintains its preloaded position.

The adjusting ring can now be released. The nut will now assume a preloaded position on the lead screw.

Lead screw selection

The suitability and the operating behavior of the system largely depend on the lead screws used with the nut. We recommend purchasing the nut and lead screw as a system from a single source. Trapezoidal lead screws are inspected with DIN 103 compliant gauges. DryLin® lead screw drives can be used with lead screws made from steel, stainless steel or hard-anodized aluminum. Self-centering (left and right) screws are available in addition to right-handed and left-handed versions.

Custom lead screws

igus® offers machining capabilities for journals, flats, and other features. Please send us a drawing to receive a quote.

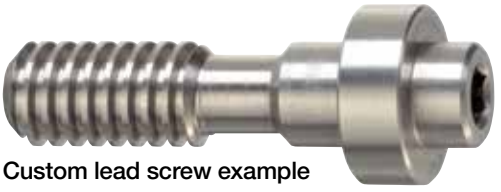

Custom lead screw example

DryLin® - Lead screw technology - Technical data

Custom nuts

Take advantage of our machining service - we manufacture lead screws nuts to suit your application. Please send us your drawing. We can then provide a quotation quickly.

Custom nut examples

Material selection

Standard DryLin® lead screw nuts are offered in 4 materials:

iglide® J: This material has the best friction values with the most leads crew materials and low moisture absorption.
➤ iglide® J, **page 115**.

iglide® L280 (W300)*: This material features high static strength
➤ iglide® L280 (W300)*, **page 171**.

iglide® A180: This material meets the requirements of the Food and Drug Administration (FDA) and can therefore be used in direct contact with foods and pharmaceuticals.
➤ iglide® A180, **page 423**.

iglide® J350: This material features high resistance to temperatures. Lead screw nuts from iglide J350 can be used up to 302°F (150°C).
➤ iglide® J350, **page 279.**

iglide® Material	Surface pressure
iglide® J	4.0 MPa
iglide® L280 (W300)*	5.0 MPa
iglide® A180	3.5 MPa
iglide® J350	3.0 MPa

Table 01: Permitted continuous surface pressure in the threads

Service life

DryLin® lead screw nuts are made from tribologically optimized materials. Already during the development phase, the focus is on optimizing the friction properties of the DryLin® lead screw units, with the objective of attaining the lowest possible wear rates and friction values. In order to make the most precise statements about service life and wear resistance, several hundred tests are conducted each year on the test equipment at the igus® test lab in Cologne. Our experts will gladly test your application as well.

Test rig at the igus® lab to determine service life

Tightening torque for DryLin® connections between metal parts

Metric thread (Da)	Torque [Nm]	Recommended torque [Nm]
M4	1.0 - 2.8	1.5
M5	2.0 - 5.5	3.0
M6	4.0 - 10.0	6.0
M8	8.0 - 23.0	15.0
M10	22.0 - 46.0	30.0

Note the minimal screw in depth for aluminum and zinc parts: 1.5 x Da

***W300 is the European material equivalent for iglide® L280**

DryLin® - Lead screw technology - Product range

ACME series lead screws

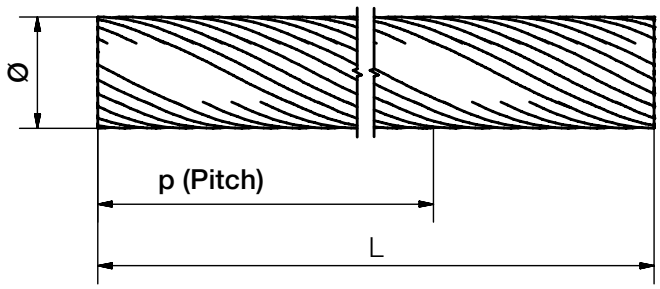

Options

Length in [mm]

Any value up to maximum, see product range

Lead screw material

Blank = Standard

ES = Stainless steel

Dimensions (inch)

Screws Carbon Steel	Screws 303/304 SS	Thread (dia/TPI)	Lead (in.)	Max. length
ACME1/4-16R	ACME1/4-16RES	1/4-16 (2C)	0.06	72”
ACME3/8-10R	ACME3/8-10RES	3/8-10 (2C)	0.10	72”
ACME3/8-12R	ACME3/8-12RES	3/8-12 (2C)	0.08	72”
ACME3/8-20R	ACME3/8-20RES	3/8-20 (2C)	0.05	72”
ACME1/2-10R	ACME1/2-10RES	1/2-10 (2C)	0.10	72”
ACME5/8-8R	ACME5/8-8RES	5/8-8 (2C)	0.125	72”
ACME3/4-6R	ACME3/4-6RES	3/4-6 (2C)	0.16	72”
ACME3/4-10R	ACME3/4-10RES	3/4-10 (2C)	0.10	72”
ACME1-5R	ACME1-5RES	1-5 (2C)	0.20	72”
ACME1-10R	ACME1-10RES	1-10 (2C)	0.10	72”

DryLin® - Lead screw technology - Product range

ACME series nuts, sleeve or flange

- Standard 2C screw leads for the North American market
- Tribo-optimized iglide® J plastic nut material for reduced wear and friction
- Available as mount-nuts or flange version
- Steel and stainless steel screws available
- Self-lubricating and maintenance-free

Typical application areas:

- Laboratory automation
- Packaging
- Automation
- Storage-retrieval
- Vending

Sleeve

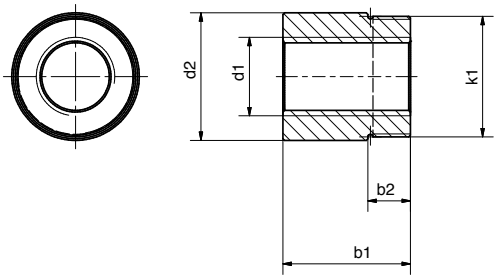

Flange

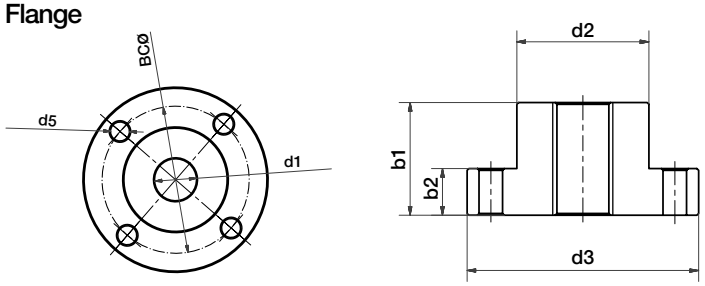

Dimensions (inch)

Part Number Sleeve/Mount Nut	Thread (dia/TPI) d1	d2	b1	Outer thread k1	Thread length b2	Lead
JSRA-01-06-20	3/8-20 (2C)	0.85	0.60	5/8-18	0.38	0.05
JSRA-01-08-10	1/2-10 (2C)	1.12	0.80	15/16-16	0.50	0.10
JSRA-01-12-6	3/4-6 (2C)	1.12	1.25	1-18	0.50	0.16
JSRA-01-16-5	1-5 (2C)	1.50	1.50	1 3/8-16	0.50	0.20

Flange Nuts	Thread (dia/TPI) d1	d2	d3	BCØ	d5	b1	b2	Lead
JFRA-01-06-20	3/8-20 (2C)	0.85	1.61	1.25	0.27	0.82	0.41	0.05
JFRA-01-08-10	1/2-10 (2C)	1.50	2.60	2.09	0.27	1.16	0.41	0.10
JFRA-01-12-6	3/4-6 (2C)	1.50	2.63	2.09	0.27	1.28	0.53	0.16
JFRA-01-16-5	1-5 (2C)	1.50	2.76	2.26	0.27	1.52	0.52	0.20

DryLin® - Lead screw technology - Product range

DryLin® ACME lead screw nuts available in 5 materials

iglide® A180
FDA-compliant for the food/pharmaceutical industry

- FDA compliant
- For contact with food
- Silent operation

iglide® J
High efficiency at all speeds

- High speed
- Low wear
- Best coefficient of friction

iglide® L280 (W300)*
Withstands high stresses

- For especially high holding periods
- Extremely high wear resistance

iglide® J350
For temperatures up to 302°F (150°C)

- For high temperatures
- Good coefficient of friction with medium loads

iglide® R
Cost-effective option for mass production

- High wear resistance for low loads
- Lowest humidity absorption
- Cost-effective alternative

DryLin® - Lead screw technology - Product range

ACME series nuts, sleeve or flange

FDA Compliant – Speed – high loads – Temperature resistance – mass production ...

Drylin® lead screw nuts are available in 5 self-lubricating iglide® high-performance materials, are available in sleeve design or flange options, and 30 installation sizes with matching stainless steel lead screws. The ideal nut and lead screw for every application.

- Self-locking and corrosion-resistant due to plastic and stainless steel

iglide® A180: FDA-compliant for food/pharmaceutical
iglide® J: high efficiency for high speeds
iglide® L280 (W300)*: high load capacity
iglide® J350 for temperatures up to 302°F (+150°C)
iglide® R: the low-priced option for high quantities

Typical application areas:
Adjustments of all types (formats, height/sides/alley adjustments), linear drives, ...

Material properties

	Unit	iglide® A180	iglide® J	iglide® L280	iglide® J350	iglide® R
General properties						
Density	[g/cm³]	1.46	1.49	1.24	1.44	1.39
Color			yellow	yellow	yellow	red
Maximum moisture absorption at 73°F (+23°C) and 50 %r.h.	[weight-%]	0.2	0.3	1.3	0.3	0.2
Mechanical properties						
Tensile strength, +68°F (+20°C)	[MPa]	88	73	125	55	70
Compressive strength	[MPa]	78	60	61	60	68
Maximum recommended surface pressure +68°F (+20°C)	[MPa]	3.5	4.0	5.0	3.0	3.0
Thermal properties						
Maximum long term application temperature	°F (°C)	194°F (+90)	194°F (+90)	194°F (+90)	302°F (+150)	194°F (+90)
Electric properties						
Specific volume resistance	[Ωcm]	> 10^{12}	> 10^{13}	> 10^{13}	> 10^{13}	> 10^{12}
Surface resistance	[Ω]	> 10^{11}	> 10^{12}	> 10^{12}	> 10^{10}	> 10^{12}

DryLin® - Lead screw technology - Product range

ACME series nuts, sleeve, full flange, or compact flange

iglide® A180

iglide® J

iglide® L280

iglide® J350

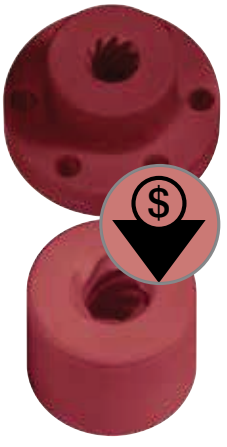

iglide® R

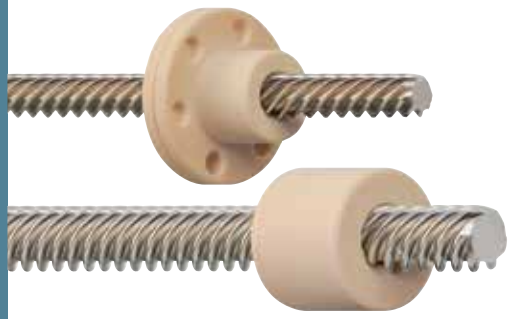

Sleeve

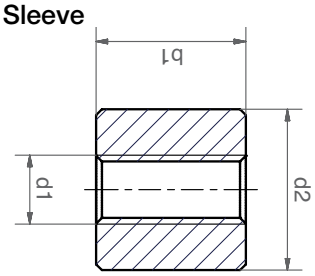

Dimensions (inch)

Part Number	Thread d1 x P	d2	d3	d4	d5	b1	b2	SW	Effective supporting surfaces [mm²]	Maximum static F axial [N]
Sleeve										
SRI-01-1/4-16	1/4-16	0.625	–	–	–	0.50	–	–	111	444
SRI-01-3/8-20	3/8-20	0.875	–	–	–	0.75	–	–	266	1,064
SRI-01-3/8-12	3/8-12	0.875	–	–	–	0.75	–	–	253	1,012
SRI-01-3/8-10	3/8-10	0.875	–	–	–	0.75	–	–	246	984
SRI-01-1/2-10	1/2-10	1.000	–	–	–	1.00	–	–	456	1,824
SRI-01-5/8-8	5/8-8	1.375	–	–	–	1.00	–	–	570	2,280
SRI-01-3/4-10	3/4-10	1.500	–	–	–	1.38	–	–	975	3,900
SRI-01-3/4-6	3/4-6	1.500	–	–	–	1.38	–	–	929	3,716
SRI-01-1-10	1-10	2.000	–	–	–	2.00	–	–	1.975	7,700
SRI-01-1-5	1-5	2.000	–	–	–	2.00	–	–	1.824	7,296
Full Flange										
FRI-01-1/4-16	1/4-16	0.500	1.00	0.75	0.13	050	0.20	–	111	444
FRI-01-3/8-20	3/8-20	1.000	1.63	1.31	0.20	1.00	0.38	–	354	1,416
FRI-01-3/8-12	3/8-12	1.000	1.63	1.31	0.20	1.00	0.38	–	338	1,352
FRI-01-3/8-10	3/8-10	1.000	1.63	1.31	0.20	1.00	0.38	–	329	1,316
FRI-01-1/2-10	1/2-10	1.125	1.88	1.00	0.24	1.38	0.50	–	627	2,508
FRI-01-5/8-8	5/8-8	1.125	1.88	1.00	0.24	1.38	0.50	–	784	3,136
FRI-01-3/4-10	3/4-10	1.125	1.88	1.00	0.24	1.38	0.50	–	975	3,900
FRI-01-3/4-6	3/4-6	1.125	1.88	1.00	0.24	1.38	0.50	–	929	3,716
FRI-01-1-10	1-10	1.500	2.50	2.00	0.28	1.75	0.59	–	1,323	5,292
FRI-01-1-5	1-5	1.500	2.50	2.00	0.28	1.75	0.59	–	1,254	5,016

DryLin® - Lead screw technology - Product range

ACME series nuts, sleeve, full flange, or compact flange

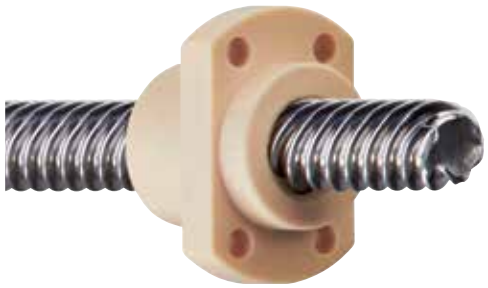

Options

iglide® material options
A180 = FDA compliant
J = High speed
L280 = High loads
J350 = High temperatures
R = Low-cost

Order key

Material	Style			Type	Dimensions	
	S	R	I	- 01	- 1/4	- 16
iglide material	S = Sleeve F = Flange	Right Thread	Inch	01 = Full flange 02 = Compact flange	ID - Major	Threads per inch

Full Flange

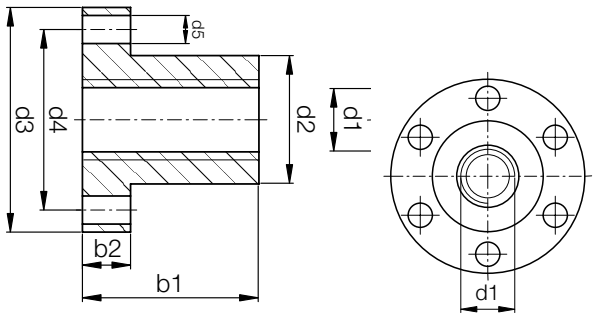

Compact Flange

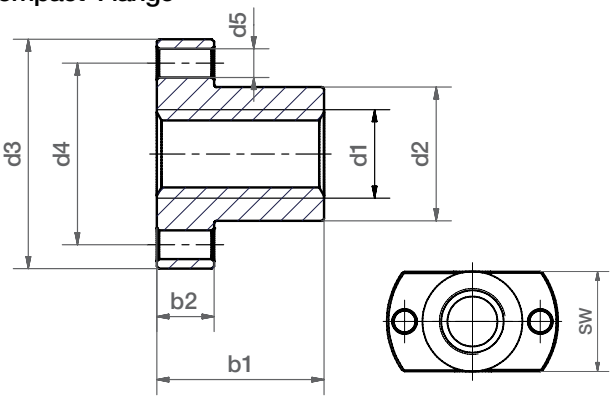

Dimensions (inch)

Part Number	Thread d1 x P	d2	d3	d4	d5	b1	b2	SW	Effective supporting surfaces [mm²]	Maximum static F axial [N]
Compact Flange										
FRI-02-1/4-16	1/4-16	0.500	1.00	0.75	0.13	0.50	0.20	0.500	111	444
FRI-02-3/8-20	3/8-20	1.000	1.63	1.31	0.20	1.00	0.38	1.000	354	1,416
FRI-02-3/8-12	3/8-12	1.000	1.63	1.31	0.20	1.00	0.38	1.000	338	1,352
FRI-02-3/8-10	3/8-10	1.000	1.63	1.31	0.20	1.00	0.38	1.000	329	1,316
FRI-02-1/2-10	1/2-10	1.125	1.88	1.00	0.24	1.38	0.50	1.125	627	2,508
FRI-02-5/8-8	5/8-8	1.125	1.88	1.00	0.24	1.38	0.50	1.125	784	3,136
FRI-02-3/4-10	3/4-10	1.125	1.88	1.50	0.24	1.38	0.50	1.125	975	3,900
FRI-02-3/4-6	3/4-6	1.125	1.88	1.50	0.24	1.38	0.50	1.125	929	3,716
FRI-02-1-10	1-10	1.500	2.50	2.00	0.28	1.75	0.59	1.500	1.323	5,292
FRI-02-1-5	1-5	1.500	2.50	2.00	0.28	1.75	0.59	1.500	1.254	5,016

*W300 is the European material equivalent for iglide® L280.

DryLin® - Lead screw technology - Product range

Trapezoidal lead screws

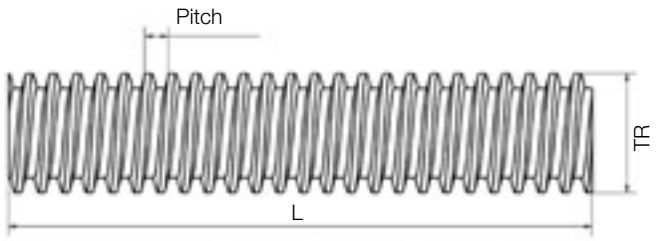

Helix deviation 0.1 mm / 300 mm Straightness 0.3 mm / 300 mm
Tolerance 7e according to DIN 103

Order key

Part number	Thread	Options

PTGSG-08x1.5-01-R-1000-ES

Lead screw	Diameter	Pitch	Number of turns	Right-hand thread	Length [mm]	Stainless steel

Options:
R = Right-hand thread
L = Left-hand thread
Length in mm = freely selectable (see table)
Blank = Carbon steel (C15) standard
ES = Stainless steel (standard)

Single start trapezoidal lead screws - Dimensions [mm]

Part No.	Right	Left	Thread	Ø	Pitch	Max. length[44]
PTGSG-08x1.5-01- ☐ - ☐	●	●	Tr08x1.5	8	1.5	1,500
PTGSG-10x2-01- ☐ - ☐	●	●	Tr10x2	10	2	3,000
PTGSG-10x3-01- ☐ - ☐	●	●	Tr10x3	10	3	3,000
PTGSG-12x3-01- ☐ - ☐	●	●	Tr12x3	12	3	3,000
PTGSG-14x3-01- ☐ - ☐	●	●	Tr14x3	14	3	3,000
PTGSG-14x4-01- ☐ - ☐	●	●	Tr14x4	14	4	3,000
PTGSG-16x2-01- ☐ - ☐	●	●	Tr16x2	16	2	3,000
PTGSG-16x4-01- ☐ - ☐	●	●	Tr16x4	16	4	3,000
PTGSG-18x4-01- ☐ - ☐	●	●	Tr18x4	18	4	3,000
PTGSG-20x4-01- ☐ - ☐	●	●	Tr20x4	20	4	3,000
PTGSG-24x5-01- ☐ - ☐	●	●	Tr24x5	24	5	3,000
PTGSG-26x5-01- ☐ - ☐	●	●	Tr26x5	26	5	3,000
PTGSG-28x5-01- ☐ - ☐	●	●	Tr28x5	28	5	3,000
PTGSG-30x6-01- ☐ - ☐	●	●	Tr30x6	30	6	3,000
PTGSG-36x6-01- ☐ - ☐	●	●	Tr36x6	36	6	3,000
PTGSG-40x7-01- ☐ - ☐	●	●	Tr40x7	40	7	3,000
PTGSG-50x8-01- ☐ - ☐	●	●	Tr50x8	50	8	3,000

Two start trapezoidal lead screws - Dimensions [mm]

Part No.	Right	Left	Thread	Ø	Pitch	Max. length[44]
PTGSG-06x2P1-02- ☐ - ☐	●	●	Tr06x2P1	6	2	1,000
PTGSG-12x6P3-02- ☐ - ☐	●	●	Tr12x6P3	12	6	3,000
PTGSG-16x8P4-02- ☐ - ☐	●	●	Tr16x8P4	16	8	3,000
PTGSG-18x8P4-02- ☐ - ☐	●	●	Tr18x8P4	18	8	3,000
PTGSG-20x8P4-02- ☐ - ☐	●	●	Tr20x8P4	20	8	3,000

[44] Larger lengths on request
Please use the "-ES" suffix for stainless steel lead screws, i.e. PTGSG-12x3-R-1000-ES

DryLin® - Lead screw technology - Product range

Trapezoidal lead screws made from aluminum, anodized**

The tensile/compressive strength of the lead screw material EN AW6060 is 160 MPa per mm² (elongation limit 0.2 mm)

Dimensions [mm]

Part No.	Right	Left	Thread	Ø	Pitch	Max. length
PTGSG-10x2-01- ☐ - ☐ -AL	●	●	Tr10x2	10	2	1,000
PTGSG-12x3-01- ☐ - ☐ -AL	●	●	Tr12x3	12	3	1,000
PTGSG-16x4-01- ☐ - ☐ -AL	●	●	Tr16x4	16	4	1,000
PTGSG-18x4-01- ☐ - ☐ -AL	●	●	Tr18x4	18	4	2,000
PTGSG-20x4-01- ☐ - ☐ -AL	●	●	Tr20x4	20	4	2,000

** Saw cut areas will be raw aluminum

Trapezoidal lead screws with single machined journal end

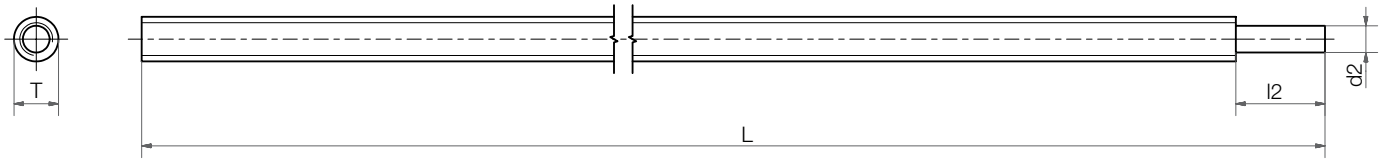

Dimensions [mm]

Part No.	Thread	l2	d2	Material	Max. length
PTGSG-10x2-01-R- ☐ [45] - Z-17	Tr10x2	17	6 h9	C15	1,000
PTGSG-10x2-01-R- ☐ [45] - Z-17-ES	Tr10x2	17	6 h9	ES	1,000
PTGSG-14x4-01-R- ☐ [45] - Z-20	Tr14x4	20	8 h9	C15	2,000
PTGSG-14x4-01-R- ☐ [45] - Z-20-ES	Tr14x4	20	8 h9	ES	2,000
PTGSG-18x4-01-R- ☐ [45] - Z-118	Tr18x4	118	12 h9	C15	2,000
PTGSG-18x4-01-R- ☐ [45] - Z-118-ES	Tr18x4	118	12 h9	ES	2,000
PTGSG-24x5-01-R- ☐ [45] - Z-144	Tr24x5	144	14 h9	C15	2,000
PTGSG-24x5-01-R- ☐ [45] - Z-144-ES	Tr24x5	144	14 h9	ES	2,000

[45] Length in mm, with left-hand thread on request

All DryLin® leads screws can be custom machined. Please send us your drawing. We can then provide a quotation quickly.

DryLin® - Lead screw technology - Product range

LH/RH lead screws

Order key

Part number	Thread	Options

PTGSG-10x2-R/L-100-100

Lead screw	Diameter	Pitch	LH/RH	Length [mm] Right-hand thread	Length [mm] Left-hand thread

All dimensions also available in stainless steel. Please add suffix "-ES"

Dimensions [mm]

Part No.	Thread	l4[46]	Total length
PTGSG-10x2-R/L- ☐ [47] - ☐ [48]	Tr10x2	20	1,000
PTGSG-14x4-R/L- ☐ [47] - ☐ [48]	Tr14x4	30	1,000
PTGSG-18x4-R/L- ☐ [47] - ☐ [48]	Tr18x4	55	1,500
PTGSG-24x5-R/L- ☐ [47] - ☐ [48]	Tr24x5	60	2,000

[46] Unusable thread transition
[47] Length right-thread (l3)
[48] Length left-thread (l2)

DryLin® - Lead screw technology - Product range

Metric lead screws

Order key

Part number	Thread	Options
PTGSG	-M3-01	-R-500-ES
Lead screw	Diameter	Turns	Right-hand thread	Length [mm]	Stainless steel

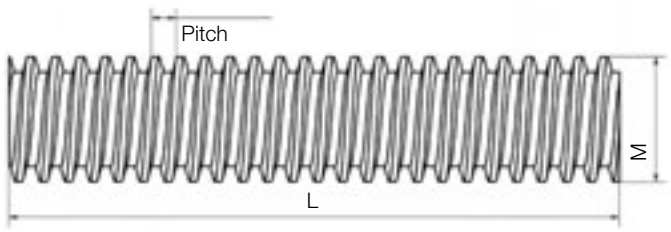

Dimensions [mm]

Part No.	Thread	Diameter	Pitch	Max. length
PTGSG-M3-01-R-500-ES	M3x0.5	3	0.5	500
PTGSG-M4-01-R-500-ES	M4x0.7	4	0.7	500
PTGSG-M5-01-R-500-ES	M5x0.8	5	0.8	500
PTGSG-M6-01-R-500-ES	M6x1	6	1	500

DryLin® - Lead screw technology - Product range

Sleeve trapezoidal lead screw nuts, made from iglide® J, right/left-hand thread

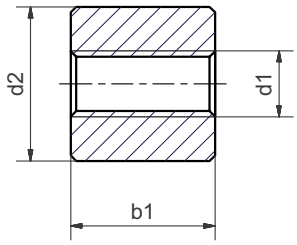

Nut materials:
For alternate material offerings use the index on pages 1158-1159
iglide® J - standard, low wear material
iglide® L280 (W300)* - High load material
iglide® A180 - FDA compliant material
iglide® J350 - High temperature material
iglide® R - low-cost, low-friction material

***W300 is the European material equivalent for iglide® L280**

Dimensions [mm]

Part No. Right-hand thread	Effective sup. surface [mm²]	d2	b1	Thread d1 x P	max. stat. axial F [N]
JSRM-1413TR06x2P1	112	14	13	Tr06x2P1	200
JSRM-1418TR08x1.5	205	14	18	Tr08x1.5	500 [43]
JSRM-1812TR08x1.5	136	18	12	Tr08x1.5	544
JSRM-2215TR10x2	212	22	15	Tr10x2	848
JSRM-2220TR10x2	282	22	20	Tr10x2	1,128
JSRM-2215TR10x3	200	22	15	Tr10x3	800
JSRM-2220TR10x3	266	22	20	Tr10x3	1,064
JSRM-2618TR12x3	297	26	18	Tr12x3	1,188
JSRM-2624TR12x3	394	26	24	Tr12x3	1,576
JSRM-3028TR14x3	550	30	28	Tr14x3	2,200
JSRM-3021TR14x4	396	30	21	Tr14x4	1,584
JSRM-3028TR14x4	526	30	28	Tr14x4	2,104
JSRM-3624TR16x2	564	36	24	Tr16x2	2,256
JSRM-3632TR16x2	702	36	32	Tr16x2	3,008
JSRM-3024TR16x4	527	30	24	Tr16x4	2,108
JSRM-3624TR16x4	526	36	24	Tr16x4	2,104
JSRM-3632TR16x4	752	36	32	Tr16x4	2,808
JSRM-3027TR18x4	678	30	27	Tr18x4	2,362 [43]
JSRM-4027TR18x4	678	40	27	Tr18x4	2,712
JSRM-4036TR18x4	904	40	36	Tr18x4	3,616
JSRM-3025TR20x4	706	30	25	Tr20x4	2,060 [43]
JSRM-4530TR20x4	848	45	30	Tr20x4	3,392
JSRM-4540TR20x4	1,130	45	40	Tr20x4	4,520
JSRM-5036TR24x5	1,214	50	36	Tr24x5	4,856
JSRM-5048TR24x5	1,620	50	48	Tr24x5	6,480
JSRM-5039TR26x5	1,438	50	39	Tr26x5	5,752
JSRM-5052TR26x5	1,918	50	52	Tr26x5	7,672
JSRM-6042TR28x5	1,680	60	42	Tr28x5	6,720
JSRM-6056TR28x5	2,240	60	56	Tr28x5	8,960
JSRM-6045TR30x6	1,906	60	45	Tr30x6	7,624
JSRM-6060TR30x6	2,542	60	60	Tr30x6	10,168
JSRM-6060TR32x6	2,730	60	60	Tr32x6	10,920
JSRM-7572TR36x6	3,732	75	72	Tr36x6	14,928
JSRM-7680TR40x7	4,582	76	80	Tr40x7	18,328
JSRM-90100TR50x8	7,225	90	100	Tr50x8	28,900

DryLin® - Lead screw technology - Product range

iglide® J – The standard low-wear nut material

Nut materials:
For alternate material offerings use the index on pages 1158-1159
iglide® J - standard, low wear material
iglide® L280 (W300)* - High load material
iglide® A180 - FDA compliant material
iglide® J350 - High temperature material
iglide® R - low-cost, low-friction material

*W300 is the European material equivalent for iglide® L280

Options:
R = Right-hand thread
L = Left-hand thread

Order key

Part number				Dimension		Thread		
J	S	L	M	- 22	20	TR10x2		
Material	Form S	Left-hand thread	Metric	d2	b1	Trapezoidal thread	Diameter	Pitch

Dimensions [mm]

Part No. Left-hand thread	Effective sup.surface [mm²]	d2	b1	Thread d1 x P	max. stat. axial F [N]
JSLM-1418TR08x1.5	205	14	18	Tr08x1.5	500 [43]
JSLM-1812TR08x1.5	136	18	12	Tr08x1.5	544
JSLM-2215TR10x2	212	22	15	Tr10x2	848
JSLM-2220TR10x2	282	22	20	Tr10x2	1,128
JSLM-2215TR10x3	200	22	15	Tr10x3	800
JSLM-2220TR10x3	266	22	20	Tr10x3	1,064
JSLM-2618TR12x3	297	26	18	Tr12x3	1,188
JSLM-2624TR12x3	394	26	24	Tr12x3	1,576
JSLM-3021TR14x4	396	30	21	Tr14x4	1,584
JSLM-3028TR14x4	526	30	28	Tr14x4	2,104
JSLM-3624TR16x2	564	36	24	Tr16x2	2,256
JSLM-3632TR16x2	702	36	32	Tr16x2	3,008
JSLM-3024TR16x4	527	30	24	Tr16x4	2,108
JSLM-3624TR16x4	526	36	24	Tr16x4	2,104
JSLM-3632TR16x4	752	36	32	Tr16x4	2,808
JSLM-3027TR18x4	678	30	27	Tr18x4	2,362 [43]
JSLM-4027TR18x4	678	40	27	Tr18x4	2,712
JSLM-4036TR18x4	904	40	36	Tr18x4	3,616
JSLM-3025TR20x4	706	30	25	Tr20x4	2,060 [43]
JSLM-4530TR20x4	848	45	30	Tr20x4	3,392
JSLM-4540TR20x4	1,130	45	40	Tr20x4	4,520
JSLM-5036TR24x5	1,214	50	36	Tr24x5	4,856
JSLM-5048TR24x5	1,620	50	48	Tr24x5	6,480
JSLM-5039TR26x5	1,438	50	39	Tr26x5	5,752
JSLM-5052TR26x5	1,918	50	52	Tr26x5	7,672
JSLM-6042TR28x5	1,680	60	42	Tr28x5	6,720
JSLM-6056TR28x5	2,240	60	56	Tr28x5	8,960
JSLM-6045TR30x6	1,906	60	45	Tr30x6	7,624
JSLM-6060TR30x6	2,542	60	60	Tr30x6	10,168
JSLM-6060TR32x6	2,730	60	60	Tr32x6	10,920
JSLM-7572TR36x6	3,732	75	72	Tr36x6	14,928
JSLM-7680TR40x7	4,582	76	80	Tr40x7	18,328
JSLM-90100TR50x8	7,225	90	100	Tr50x8	28,900

[43] Reduced axial load due to nut geometry

DryLin® - Lead screw technology - Product range

Lead screw nuts with spanner flat, right-hand thread
iglide® J – The standard low-wear nut material

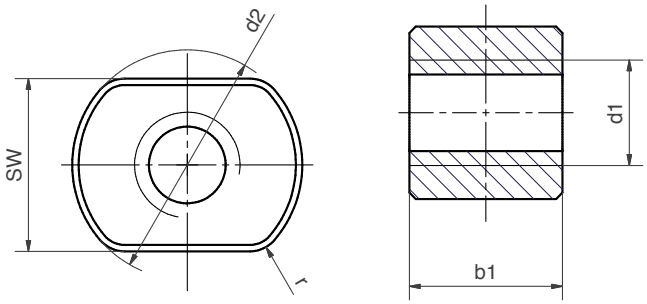

Order key

Part number	SW	b2	b1	Thread
JSRM-172220TR10x12				

Material	Form S	Right-hand thread	Metric	Width across flats: [mm]	Outer Ø [mm]	Length Ø [mm]	Trapezoidal thread	Thread Ø [mm]	Pitch P [mm]

Nut materials:
For alternate material offerings use the index on pages 1158-1159
iglide® J - standard, low wear material
iglide® L280 (W300)* - High load material
iglide® A180 - FDA compliant material
iglide® J350 - High temperature material
iglide® R - low-cost, low-friction material

***W300 is the European material equivalent for iglide® L280**

Dimensions [mm]

Part No.	Effective supporting surface [mm²]	SW	d2	b1	r	Thread d1 x P	max. stat. F axial [N]
JSRM-172220TR10x2	282	17	22	20	3	Tr10x2	1,128
JSRM-192624TR12x3	394	19	26	24	3	Tr12x3	1,576
JSRM-273624TR16x4	526	27	36	24	5	Tr16x4	2,108
JSRM-304540TR20x4	1,130	30	45	40	6	Tr20x4	4,520
JSRM-365048TR24x5	1,620	36	50	48	8	Tr24x5	6,480
JSRM-456060TR30x6	2,542	45	60	60	10	Tr30x6	10,168

DryLin® - Lead screw technology - Product range

Miniature lead screw nuts, right-hand thread
iglide® J – The standard low-wear nut material

Sleeve

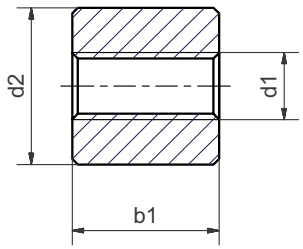

Nut materials:
For alternate material offerings use the index on pages 1158-1159
iglide® J - standard, low wear material
iglide® L280 (W300)* - High load material
iglide® A180 - FDA compliant material
iglide® J350 - High temperature material
iglide® R - low-cost, low-friction material

***W300 is the European material equivalent for iglide® L280**

Order key

Part number				Dimension		Thread
J	S	R	M	- 14	13	M3
Material	Form S	Right-hand thread	Metric	d2	b1	Diameter

Options:
Form S = Cylindrical
Form F = With flange

Dimensions [mm]

Part No.	Effective supporting surface [mm²]	d2	b1	Thread d1 x P	max. stat. F axial [N]
JSRM-1413M3	56	14	13	M3x0.5	75
JSRM-1413M4	74	14	13	M4x0.7	100
JSRM-1413M5	91	14	13	M5x0.8	150
JSRM-1413M6	112	14	13	M6x1	200

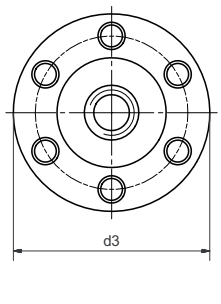

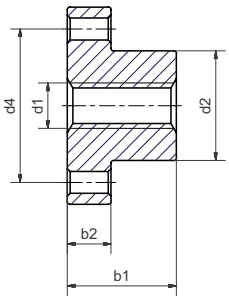

With flange

Dimensions [mm]

Part No.	Effective supporting surface [mm²]	d2	d3	d4	d5	b1	b2	Thread d1 x P	max. stat. F axial [N]
JFRM-0913M3	56	9	18	15.2	3.2	13	3	M3x0.5	75
JFRM-0913M4	74	9	18	15.2	3.2	13	3	M4x0.7	75
JFRM-0913M5	91	9	18	15.2	3.2	13	3	M5x0.8	75
JFRM-1315M6	129	13	25	19	3.2	15	5	M6x1	175

DryLin® - Lead screw technology - Product range

Anti backlash lead screw nuts, flange, right-hand thread
iglide® J – The standard low-wear nut material

JSRM

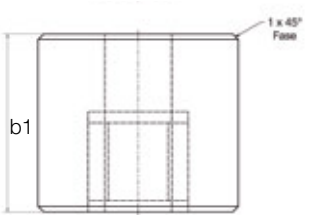

JFRM

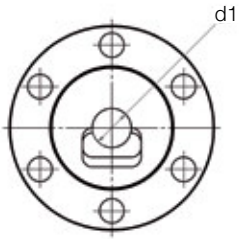

Nut materials:
For alternate material offerings use the index on pages 1158-1159
iglide® J - standard, low wear material
iglide® L280 (W300)* - High load material
iglide® A180 - FDA compliant material
iglide® J350 - High temperature material
iglide® R - low-cost, low-friction material

***W300 is the European material equivalent for iglide® L280**

Dimensions [mm]

Part No. Cylindrical design	d2	b1	Thread d1 x P	max. stat. axial F [N]
JSRM-AB-2220-TR08x1.5	22	20	Tr08x1.5	500
JSRM-AB-2220-TR10x2	22	20	Tr10x2	840
JSRM-AB-2624-TR12x3	26	24	Tr12x3	1,185
JSRM-AB-3632-TR16x4	36	32	Tr16x4	2,110
JSRM-AB-4036-TR18x4	40	36	Tr18x4	2,700
JSRM-AB-4540-TR20x4	45	40	Tr20x4	3,400
JSRM-AB-5048-TR24x5	50	48	Tr24x5	4,800

Other thread sizes and nut shapes with anti backlash function on request

DryLin® - Lead screw technology - Product range

iglide® J – The standard low-wear nut material

Nut materials:
For alternate material offerings use the index on pages 1158-1159
iglide® J - standard, low wear material
iglide® L280 (W300)* - High load material
iglide® A180 - FDA compliant material
iglide® J350 - High temperature material
iglide® R - low-cost, low-friction material

*W300 is the European material equivalent for iglide® L280

Order key

Part number					Dimension		Thread		
J	F	L	M	-AB-	25	25	TR10x2		
Material	Form F	Left-hand thread	Metric	Anti Backlash	d2	b1	Trapezoidal thread	Diameter	Pitch

Options:
Form S = Sleeve
Form F = With flange

Dimensions [mm]

Part No. With flange	d2	d3	d4	d5	b1	b2	Thread d1 x P	max. stat. axial F [N]
JFRM-AB-2525-TR10x2	25	42	34	5	25	10	Tr10x2	1,160
JFRM-AB-2525-TR10X3	25	42	34	5	25	10	Tr10x3	1,110
JFRM-AB-2835-TR14x4	28	48	38	6	35	12	Tr14x4	2,390
JFRM-AB-2835-TR16x2	28	48	38	6	35	12	Tr16x2	2,300
JFRM-AB-2835-TR16x4	28	48	38	6	35	12	Tr16x4	2,520
JFRM-AB-2835-TR18x4	28	48	38	6	35	12	Tr18x4	2,890
JFRM-AB-3244-TR20x4	32	55	45	7	44	12	Tr20x4	4,080
JFRM-AB-3244-TR24x5	32	55	45	7	44	12	Tr24x5	4,890

Other thread sizes and nut shapes with anti backlash function on request

Backlash refers to the play at direction reversal, which is caused in a lead screw drive by the axial clearance. By means of a radial pretensioning vibrations (often the cause of noises, especially with long spindles and high speed) are significantly reduced.

DryLin® - Lead screw technology - Product range

Trapezoidal lead screw nuts with flange, right/left-hand thread
iglide® J – The standard low-wear nut material

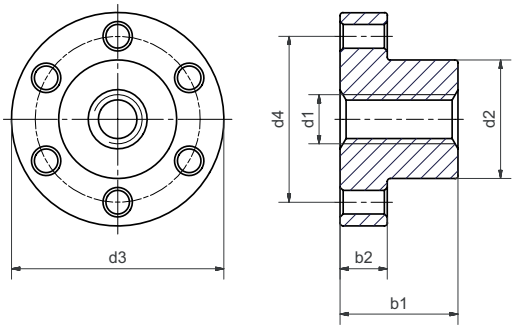

Nut materials:
For alternate material offerings use the index on pages 1158-1159
iglide® J - standard, low wear material
iglide® L280 (W300)* - High load material
iglide® A180 - FDA compliant material
iglide® J350 - High temperature material
iglide® R - low-cost, low-friction material

***W300 is the European material equivalent for iglide® L280**

Dimensions [mm]

Part No. Right-hand thread	Effective supporting surface [mm²]	d2	d3	d4	d5	b1	b2	Thread d1 x P	max. stat. F axial [N]
JFRM-1315TR06x2P1	129	13	25	19	3.2	15	5	Tr06x2P1	175
JFRM-2020TR08x1.5	225	20	36	28	4	20	8	Tr08x1.5	900
JFRM-2525TR10x2	352	25	42	34	5	25	10	Tr10x2	1,408
JFRM-2525TR10x3	334	25	42	34	5	25	10	Tr10x3	1,336
JFRM-2835TR12x3	576	28	48	38	6	35	12	Tr12x3	2,304
JFRM-2835TR14x3	687	28	48	38	6	35	12	Tr14x3	2,748
JFRM-2835TR14x4	658	28	48	38	6	35	12	Tr14x4	2,632
JFRM-2835TR16x2	822	28	48	38	6	35	12	Tr16x2	3,290
JFRM-2835TR16x4	768	28	48	38	6	35	12	Tr16x4	3,072
JFRM-2835TR18x4	878	28	48	38	6	35	12	Tr18x4	3,512
JFRM-3244TR20x4	1,242	32	55	45	7	44	12	Tr20x4	4,968
JFRM-3244TR24x5	1,484	32	55	45	7	44	12	Tr24x5	5,936
JFRM-3846TR26x5	1,696	38	62	50	7	46	14	Tr26x5	6,320 [43)]
JFRM-3846TR28x5	1,840	38	62	50	7	46	14	Tr28x5	4,560 [43)]
JFRM-3846TR30x6	1,948	38	62	50	7	46	14	Tr30x6	3,576 [43)]
JFRM-4546TR30x6	1,948	45	70	58	7	46	16	Tr30x6	9,740
JFRM-4588TR36x6	4,561	45	70	58	7	88	16	Tr36x6	7,580 [43)]
JFRM-6770Tr36x6	3,629	67	95	81	7	70	25	Tr36x6	14,516
JFRM-6770Tr40x7	4,013	67	95	81	7	70	25	Tr40x7	16,052

[43)] **Reduced axial load due to nut geometry**

DryLin® - Lead screw technology - Product range

iglide® J – The standard low-wear nut material

Order key

Part number				Dimension		Thread		
J	F	L	M	- 25	25	TR10x2		
Material	Form F	Left-hand thread	Metric	d2	b1	Trapezoidal thread	Diameter	Pitch

Options:
R = Right-hand thread
L = Left-hand thread

Nut materials:
For alternate material offerings use the index on pages 1158-1159
iglide® J - standard, low wear material
iglide® L280 (W300)* - High load material
iglide® A180 - FDA compliant material
iglide® J350 - High temperature material
iglide® R - low-cost, low-friction material

***W300 is the European material equivalent for iglide® L280**

Dimensions [mm]

Part No. Left-hand thread	Effective supporting surface [mm²]	d2	d3	d4	d5	b1	b2	Thread d1 x P	max. stat. F axial [N]
JFLM-2020TR08x1.5	225	20	36	28	4	20	8	Tr08x1.5	900
JFLM-2525TR10x2	352	25	42	34	5	25	10	Tr10x2	1,408
JFLM-2835TR12x3	576	28	48	38	6	35	12	Tr12x3	2,304
JFLM-2835TR14x4	658	28	48	38	6	35	12	Tr14x4	2,632
JFLM-2835TR16x4	768	28	48	38	6	35	12	Tr16x4	3,072
JFLM-2835TR18x4	878	28	48	38	6	35	12	Tr18x4	3,512
JFLM-3244TR20x4	1,242	32	55	45	7	44	12	Tr20x4	4,968
JFLM-3244TR24x5	1,484	32	55	45	7	44	12	Tr24x5	5,936
JFLM-3846TR26x5	1,696	38	62	50	7	46	14	Tr26x5	6,320 [43)]
JFLM-3846TR28x5	1,840	38	62	50	7	46	14	Tr28x5	4,560 [43)]
JFLM-3846TR30x6	1,948	38	62	50	7	46	14	Tr30x6	3,576 [43)]
JFLM-4546TR30x6	1,948	45	70	58	7	46	16	Tr30x6	9,740

[43)] **Reduced axial load due to nut geometry**

DryLin® - Lead screw technology - Product range

Compact flanged nut, right-hand thread
iglide® J – The standard low-wear nut material

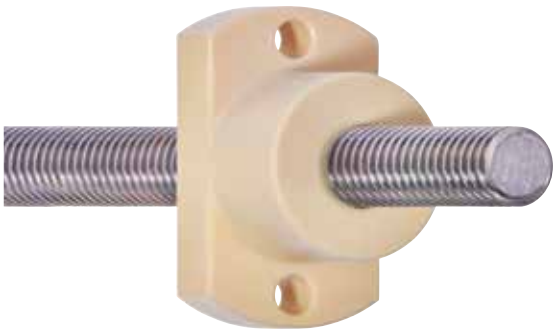

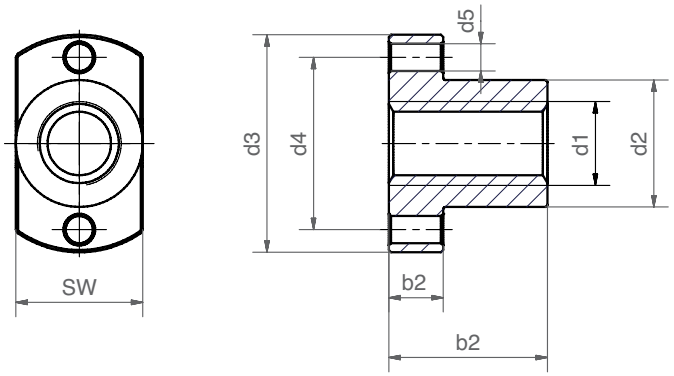

Order key

Part number				Dimension				Thread	
J	F	R	M	-	252525	TR	10x12		
Material	Form F	Right-hand thread	Metric	Width across flats: [mm]	Outer Ø [mm]	Length Ø [mm]	Thread type	Thread Ø [mm]	Pitch P [mm]

Nut materials:
For alternate material offerings use the index on pages 1158-1159
iglide® J - standard, low wear material
iglide® L280 (W300)* - High load material
iglide® A180 - FDA compliant material
iglide® J350 - High temperature material
iglide® R - low-cost, low-friction material

***W300 is the European material equivalent for iglide® L280**

Dimensions [mm]

Part No.	Effective supporting surface [mm²]	SW	d2	d3	d4	d5	b1	b2	Thread d1 x P	max. stat. F axial [N]
JFRM-090913M5	91	9	9	18	15.2	3.2	13	3	M5x0.8	75
JFRM-131315TR06x2P1	129	13	13	25	19	3.2	15	5	Tr06x2P1	175
JFRM-202020TR08x1.5	225	20	20	36	28	4	20	8	Tr08x1.5	900
JFRM-252525TR10x2	352	25	25	42	34	5	25	10	Tr10x2	704
JFRM-282835TR12x3	576	28	28	48	38	6	35	12	Tr12x3	1,152
JFRM-282835TR14x4	822	28	28	48	38	6	35	12	Tr14x4	1,644
JFRM-282835TR16x4	768	28	28	48	38	6	35	12	Tr16x4	1,536
JFRM-282835TR18x4	878	28	28	48	38	6	35	12	Tr18x4	1,756

Reduced axial load due to nut geometry

Notes

DryLin® - Lead screw technology - Product range

Two-start trapezoidal lead screw nuts, sleeve, right-hand thread
iglide® J – The standard low-wear nut material

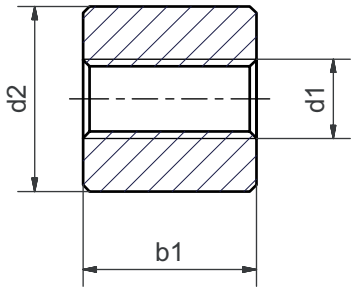

Nut materials:
For alternate material offerings use the index on pages 1158-1159
iglide® J - standard, low wear material
iglide® L280 (W300)* - High load material
iglide® A180 - FDA compliant material
iglide® J350 - High temperature material
iglide® R - low-cost, low-friction material

***W300 is the European material equivalent for iglide® L280**

Dimensions [mm]

Part No. cylindrical	Effective supporting surface [mm²]	d2	b1	Thread d1 x P	max. stat. F axial [N]
JSRM-2624TR12x6P3	395	26	24	Tr12x6P3	1,343
JSRM-3024TR12x6P3	395	30	24	Tr12x6P3	1,343
JSRM-3024TR16x8P4	527	30	24	Tr16x8P4	1,792
JSRM-3632TR16x8P4	752	36	32	Tr16x8P4	2,557
JSRM-4036TR18x8P4	904	40	36	Tr18x8P4	3,074
JSRM-4540TR20x8P4	1,130	45	40	Tr20x8P4	3,842

Definition: two-start lead screw nuts
Example 8P4 pitch

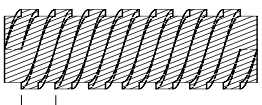

P4 = Distance to the next thread 4 mm
8P = 8 mm Lead
8 mm / Rev

DryLin® - Lead screw technology - Product range

iglide® J – The standard low-wear nut material

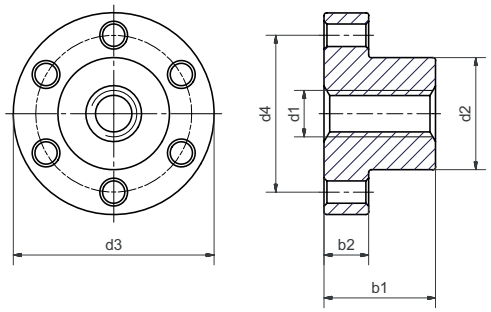

Order key

Part number	Dimension	Thread
J F R M	- 28 35	TR12x6P3

Material	Form F	Right-hand thread	Metric	d2	b1	Trapezoidal thread	Diameter	Pitch

Options:

Form S = Sleeve

Form F = With flange

Nut materials:

For alternate material offerings use the index on pages 1158-1159

iglide® J - standard, low wear material

iglide® L280 (W300)* - High load material

iglide® A180 - FDA compliant material

iglide® J350 - High temperature material

iglide® R - low-cost, low-friction material

***W300 is the European material equivalent for iglide® L280**

Dimensions [mm]

Part No. With flange	Effective supporting surface [mm²]	d2	d3	d4	d5	b1	b2	Thread d1 x P	max. stat. F axial [N]
JFRM-2835TR12x6P3	576	28	48	38	6	35	12	Tr12x6P3	1,958
JFRM-2835TR16x8P4	768	28	48	38	6	35	12	Tr16x8P4	2,611
JFRM-2835TR18x8P4	878	28	48	38	6	35	12	Tr18x8P4	2,985
JFRM-3244TR20x8P4	1,242	32	55	45	7	44	12	Tr20x8P4	4,223

DryLin® - Lead screw technology - Product range

Sleeve trapezoidal lead screw nuts, right/left-hand threads
iglide® L280 (W300)* – The high-load material

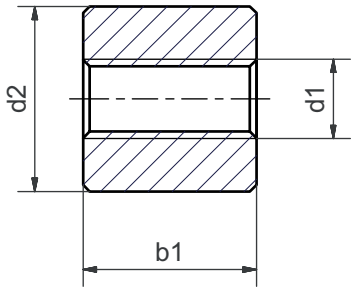

Nut materials:
For alternate material offerings use the index on pages 1158-1159
iglide® J - standard, low wear material
iglide® L280 (W300)* - High load material
iglide® A180 - FDA compliant material
iglide® J350 - High temperature material
iglide® R - low-cost, low-friction material

***W300 is the European material equivalent for iglide® L280**

Dimensions [mm]

Part No. short / right-hand thread	Effective supporting surface [mm²]	d2	b1	Thread d1 x P	max. stat. axial F [N]
WSRM-2215TR10x2	212	22	15	Tr10x2	1,060
WSRM-2215TR10x3	200	22	15	Tr10x3	1,000
WSRM-2618TR12x3	296	26	18	Tr12x3	1,480
WSRM-3021TR14x4	396	30	21	Tr14x4	1,980
WSRM-3624TR16x2	564	36	24	Tr16x2	2,820
WSRM-3024TR16x4	526	30	24	Tr16x4	2,630
WSRM-3624TR16x4	526	36	24	Tr16x4	2,830
WSRM-3027TR18x4	678	30	27	Tr18x4	3,390
WSRM-4027TR18x4	678	40	27	Tr18x4	3,390
WSRM-3025TR20x4	706	30	25	Tr20x4	3,530
WSRM-4530TR20x4	848	45	30	Tr20x4	4,240
WSRM-5036TR24x5	1,214	50	36	Tr24x5	6,070
WSRM-5039TR26x5	1,438	50	39	Tr26x5	7,190
WSRM-6042TR28x5	1,680	60	42	Tr28x5	8,400
WSRM-6045TR30x6	1,906	60	45	Tr30x6	9,530
long / right-hand thread					
WSRM-2220TR10x2	282	22	20	Tr10x2	1,410
WSRM-2220TR10x3	266	22	20	Tr10x3	1,330
WSRM-2624TR12x3	394	26	24	Tr12x3	1,970
WSRM-3028TR14x4	526	30	28	Tr14x4	2,630
WSRM-3632TR16x2	702	36	32	Tr16x2	3,760
WSRM-3632TR16x4	752	36	32	Tr16x4	3,510
WSRM-4036TR18x4	904	40	36	Tr18x4	4,520
WSRM-4540TR20x4	1,130	45	40	Tr20x4	5,650
WSRM-5048TR24x5	1,620	50	48	Tr24x5	8,100
WSRM-5052TR26x5	1,918	50	52	Tr26x5	9,590
WSRM-6056TR28x5	2,240	60	56	Tr28x5	11,200
WSRM-6060TR30x6	2,542	60	60	Tr30x6	12,710
WSRM-7572TR36x6	3,732	75	72	Tr36x6	18,660

DryLin® - Lead screw technology - Product range

iglide® L280 (W300)* – The high-load material

Nut materials:
For alternate material offerings use the index on pages 1158-1159
iglide® J - standard, low wear material
iglide® L280 (W300)* - High load material
iglide® A180 - FDA compliant material
iglide® J350 - High temperature material
iglide® R - low-cost, low-friction material

***W300 is the European material equivalent for iglide® L280**

Order key

Part number				Dimension		Thread		
W	S	L	M	- 22	15	TR10x2		
Material	Form S	Left-hand thread	Metric	d2	b1	Trapezoidal thread	Diameter	Pitch

Options:
R = Right-hand thread
L = Left-hand thread

Dimensions [mm]

Part No. short / left-hand thread	Effective supporting surface [mm²]	d2	b1	Thread d1 x P	max. stat. axial F [N]
WSLM-2215TR10x2	212	22	15	Tr10x2	1,060
WSLM-2215TR10x3	200	22	15	Tr10x3	1,000
WSLM-2618TR12x3	296	26	18	Tr12x3	1,480
WSLM-3021TR14x4	396	30	21	Tr14x4	1,980
WSLM-3624TR16x2	564	36	24	Tr16x2	2,820
WSLM-3024TR16x4	526	30	24	Tr16x4	2,630
WSLM-3624TR16x4	526	36	24	Tr16x4	2,830
WSLM-3027TR18x4	678	30	27	Tr18x4	3,390
WSLM-4027TR18x4	678	40	27	Tr18x4	3,390
WSLM-3025TR20x4	706	30	25	Tr20x4	3,530
WSLM-4530TR20x4	848	45	30	Tr20x4	4,240
WSLM-5036TR24x5	1,214	50	36	Tr24x5	6,070
WSLM-5039TR26x5	1,438	50	39	Tr26x5	7,190
WSLM-6042TR28x5	1,680	60	42	Tr28x5	8,400
WSLM-6045TR30x6	1,906	60	45	Tr30x6	9,530
long / left-hand thread					
WSLM-2220TR10x2	282	22	20	Tr10x2	1,410
WSLM-2220TR10x3	266	22	20	Tr10x3	1,330
WSLM-2624TR12x3	394	26	24	Tr12x3	1,970
WSLM-3028TR14x4	526	30	28	Tr14x4	2,630
WSLM-3632TR16x2	702	36	32	Tr16x2	3,760
WSLM-3632TR16x4	752	36	32	Tr16x4	3,510
WSLM-4036TR18x4	904	40	36	Tr18x4	4,520
WSLM-4540TR20x4	1,130	45	40	Tr20x4	5,650
WSLM-5048TR24x5	1,620	50	48	Tr24x5	8,100
WSLM-5052TR26x5	1,918	50	52	Tr26x5	9,590
WSLM-6056TR28x5	2,240	60	56	Tr28x5	11,200
WSLM-6060TR30x6	2,542	60	60	Tr30x6	12,710

DryLin® - Lead screw technology - Product range

Trapezoidal lead screw nuts with flange, right/left-hand threads iglide® L280 (W300)* – The high-load material

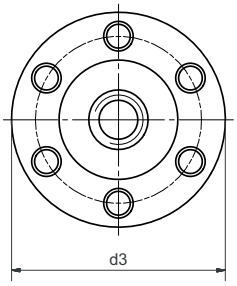

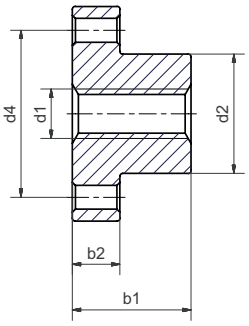

Nut materials:
For alternate material offerings use the index on pages 1158-1159
iglide® J - standard, low wear material
iglide® L280 (W300)* - High load material
iglide® A180 - FDA compliant material
iglide® J350 - High temperature material
iglide® R - low-cost, low-friction material

***W300 is the European material equivalent for iglide® L280**

Dimensions [mm]

Part No. Right-hand thread	Effective supporting surface [mm²]	d2	d3	d4	d5	b1	b2	Thread d1 x P	max. stat. F axial [N]
WFRM-2525TR10x2	352	25	42	34	5	25	10	Tr10x2	1,760
WFRM-2525TR10x3	334	25	42	34	5	25	10	Tr10x3	1,670
WFRM-2835TR12x3	576	28	48	38	6	35	12	Tr12x3	2,880
WFRM-2835TR14x4	658	28	48	38	6	35	12	Tr14x4	3,290
WFRM-2835TR16x2	822	28	48	38	6	35	12	Tr16x2	4,110
WFRM-2835TR16x4	768	28	48	38	6	35	12	Tr16x4	3,840
WFRM-2835TR18x4	878	28	48	38	6	35	12	Tr18x4	4,390
WFRM-3244TR20x4	1,242	32	55	45	7	44	12	Tr20x4	6,210
WFRM-3244TR24x5	1,484	32	55	45	7	44	12	Tr24x5	7,420
WFRM-3846TR26x5	1,696	38	62	50	7	46	14	Tr26x5	7,900 [43)]
WFRM-3846TR28x5	1,840	38	62	50	7	46	14	Tr28x5	5,900 [43)]
WFRM-3846TR30x6	1,948	38	62	50	7	46	14	Tr30x6	4,470 [43)]

Reduced axial load due to nut geometry

DryLin® - Lead screw technology - Product range

iglide® L280 (W300)* – The high-load material

Order key

Part number					Dimension		Thread		
W	F	L	M	-	25	25	TR10x2		
Material	Form F	Left-hand thread	Metric		d2	b1	Trapezoidal thread	Diameter	Pitch

Options:
R = Right-hand thread
L = Left-hand thread

Nut materials:
For alternate material offerings use the index on pages 1158-1159
iglide® J - standard, low wear material
iglide® L280 (W300)* - High load material
iglide® A180 - FDA compliant material
iglide® J350 - High temperature material
iglide® R - low-cost, low-friction material

***W300 is the European material equivalent for iglide® L280**

Dimensions [mm]

Part No. Left-hand thread	Effective supporting surface [mm²]	d2	d3	d4	d5	b1	b2	Thread d1 x P	max. stat. F axial [N]
WFLM-2525TR10x2	352	25	42	34	5	25	10	Tr10x2	1,760
WFLM-2835TR12x3	576	28	48	38	6	35	12	Tr12x3	2,880
WFLM-2835TR14x4	658	28	48	38	6	35	12	Tr14x4	3,290
WFLM-2835TR16x2	822	28	48	38	6	35	12	Tr16x2	4,110
WFLM-2835TR16x4	768	28	48	38	6	35	12	Tr16x4	3,840
WFLM-2835TR18x4	878	28	48	38	6	35	12	Tr18x4	4,390
WFLM-3244TR20x4	1,242	32	55	45	7	44	12	Tr20x4	6,210
WFLM-3244TR24x5	1,484	32	55	45	7	44	12	Tr24x5	7,420
WFLM-3846TR26x5	1,696	38	62	50	7	46	14	Tr26x5	7,900 [43]
WFLM-3846TR28x5	1,840	38	62	50	7	46	14	Tr28x5	5,900 [43]
WFLM-3846TR30x6	1,948	38	62	50	7	46	14	Tr30x6	4,470 [43]

Reduced axial load due to nut geometry

DryLin® - Lead screw technology - Product range

Trapezoidal lead screw nuts, sleeve/flange, right-hand thread
iglide® R – Low-cost, low-friction

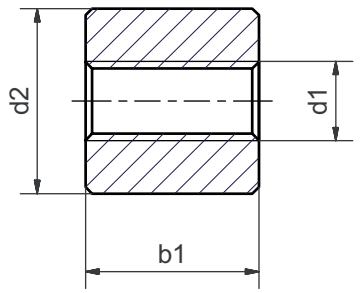

Nut materials:
For alternate material offerings use the index on pages 1158-1159
iglide® J - standard, low wear material
iglide® L280 (W300)* - High load material
iglide® A180 - FDA compliant material
iglide® J350 - High temperature material
iglide® R - low-cost, low-friction material

***W300 is the European material equivalent for iglide® L280**

Dimensions [mm]

Part No.	Effective supporting surface [mm²]	d2	b1	Thread d1 x P	max. stat. F axial [N]
RSRM-1816TR08x1.5	182	18	16	Tr08x1,5	820
RSRM-2215TR10x2	212	22	15	Tr10x2	848
RSRM-2215TR10x3	200	22	15	Tr10x3	800
RSRM-2618TR12x3	297	26	18	Tr12x3	1,188
RSRM-3021TR14x4	396	30	21	Tr14x4	1,584
RSRM-3624TR16x4	527	36	24	Tr16x4	2,104
RSRM-4027TR18x4	678	40	27	Tr18x4	2,712
RSRM-4540TR20x4	1,130	45	40	Tr20x4	4,520
RSRM-5048TR24x5	1,620	50	48	Tr24x4	6,480

DryLin® - Lead screw technology - Product range

iglide® R – Low-cost, low-friction

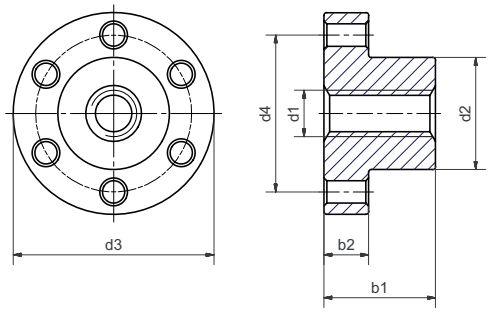

Nut materials:

For alternate material offerings use the index on pages 1158-1159

iglide® J - standard, low wear material

iglide® L280 (W300)* - High load material

iglide® A180 - FDA compliant material

iglide® J350 - High temperature material

iglide® R - low-cost, low-friction material

*W300 is the European material equivalent for iglide® L280

Order key

Part number	Dimension	Thread

R F R M - 25 25 TR10x2

Material	Form F	Right-hand thread	Metric	d2	b1	Trapezoidal thread	Diameter	Pitch

Options:

Form S = Sleeve

Form F = With flange

Dimensions [mm]

Part No.	Effective supporting surface [mm²]	d2	d3	d4	d5	b1	b2	Thread d1 x P	max. stat. F axial [N]
RFRM-2020TR08x1.5	225	20	36	28	4	20	8	Tr08x1,5	900
RFRM-2525TR10x2	352	25	42	34	5	25	10	Tr10x2	1,408
RFRM-2525TR10x3	334	25	42	34	5	25	10	Tr10x3	1,320
RFRM-2835TR12x3	576	28	48	38	6	35	12	Tr12x3	2,304
RFRM-2835TR14x4	658	28	48	38	6	35	12	Tr14x4	2,632
RFRM-2835TR16x4	768	28	48	38	6	35	12	Tr16x4	3,072
RFRM-2835TR18x4	878	28	48	38	6	35	12	Tr18x4	3,512
RFRM-3244TR20x4	1,242	32	55	45	7	44	12	Tr20x4	4,968
RFRM-3244TR24x5	1,484	32	55	45	7	44	12	Tr24x5	5,936

DryLin® - Lead screw technology - Product range

Trapezoidal lead screw nuts, sleeve/flange, right-hand thread
iglide® A180 – The FDA compliant material

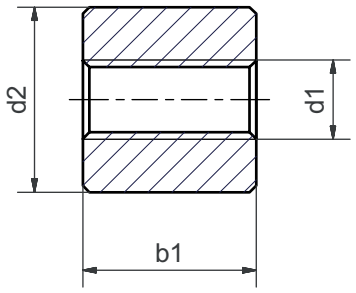

Nut materials:
For alternate material offerings use the index on pages 1158-1159
iglide® J - standard, low wear material
iglide® L280 (W300)* - High load material
iglide® A180 - FDA compliant material
iglide® J350 - High temperature material
iglide® R - low-cost, low-friction material

***W300 is the European material equivalent for iglide® L280**

Dimensions [mm]

Part No.	Effective supporting surface [mm²]	d2	b1	Thread d1 x P	max. stat. F axial [N]
A180SRM-1812TR08x1.5	136	18	12	Tr08x1.5	476
A180SRM-2215TR10x2	212	22	15	Tr10x2	742
A180SRM-2220TR10x2	283	22	20	Tr10x2	991
A180SRM-2624TR12x3	394	26	24	Tr12x3	1,379
A180SRM-3024TR16x4	527	30	24	Tr16x4	1,845
A180SRM-3632TR16x4	704	36	32	Tr16x4	2,464
A180SRM-4027TR18x4	678	40	27	Tr18x4	2,373
A180SRM-3025TR20x4	706	30	25	Tr20x4	2,471
A180SRM-4540TR20x4	1,130	45	40	Tr20x4	3,955
A180SRM-7572TR36x6	3,732	75	72	Tr36x6	13,062

DryLin® - Lead screw technology - Product range

iglide® A180 – The FDA compliant material

Order key

Part number				Dimension		Thread		
A180	F	R	M	- 25	25	TR10x2		
Material	Form F	Right-hand thread	Metric	d2	b1	Trapezoidal thread	Diameter	Pitch

Options:
Form S = Cylindrical
Form F = With flange

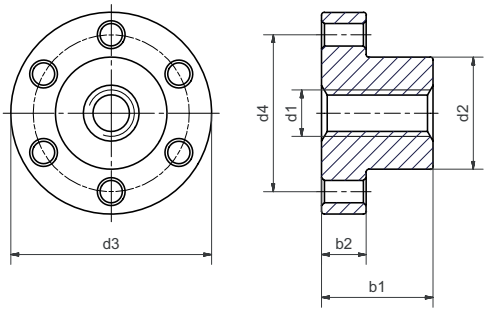

Nut materials:
For alternate material offerings use the index on pages 1158-1159
iglide® J - standard, low wear material
iglide® L280 (W300)* - High load material
iglide® A180 - FDA compliant material
iglide® J350 - High temperature material
iglide® R - low-cost, low-friction material

***W300 is the European material equivalent for iglide® L280**

Dimensions [mm]

Part No.	Effective supporting surface [mm²]	d2	d3	d4	d5	b1	b2	Thread d1 x P	max. stat. F axial [N]
A180FRM-2020TR08x1.5	225	20	36	28	4	20	8	Tr08x1.5	788
A180FRM-2525TR10x2	352	25	42	34	5	25	10	Tr10x2	1,232
A180FRM-2835TR12x3	576	28	48	38	6	35	12	Tr10x3	2,016
A180FRM-2835TR16x4	768	28	48	38	6	35	12	Tr16x4	2,458
A180FRM-2835TR18x4	878	28	48	38	6	35	12	Tr18x4	2,810
A180FRM-3244TR20x4	1,242	32	55	45	7	44	12	Tr20x4	3,974

DryLin® - Lead screw technology - Product range

Trapezoidal lead screw nuts, cylindrical/with flange, right-hand thread iglide® J350 – The high temperature material 302°F (150°C)

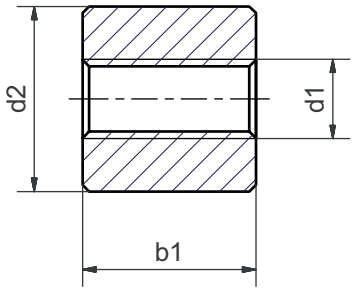

Nut materials:
For alternate material offerings use the index on pages 1158-1159
iglide® J - standard, low wear material
iglide® L280 (W300)* - High load material
iglide® A180 - FDA compliant material
iglide® J350 - High temperature material
iglide® R - low-cost, low-friction material

***W300 is the European material equivalent for iglide® L280**

Dimensions [mm]

Part No.	Effective supporting surface [mm²]	d2	b1	Thread d1 x P	max. stat. F axial [N]
J350SRM-1812TR08x1.5	136	18	12	Tr08x1.5	408
J350SRM-2215TR10x2	212	22	15	Tr10x2	636
J350SRM-2624TR12x3	394	26	24	Tr12x3	1,182
J350SRM-3024TR16x4	527	30	24	Tr16x4	1,581
J350SRM-4027TR18x4	678	40	27	Tr18x4	2,034
J350SRM-4530TR20x4	848	45	30	Tr20x4	2,544
J350SRM-4550TR24x5	1,689	45	50	Tr24x5	5,067

DryLin® - Lead screw technology - Product range

iglide® J350 – The high temperature material 302°F (150°C)

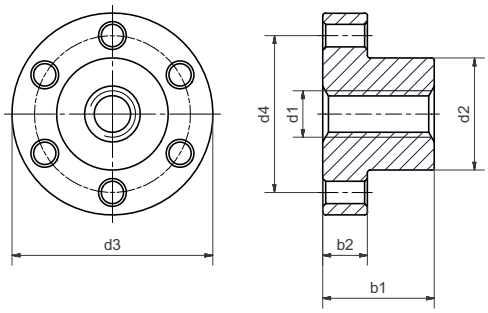

Order key

Part number				Dimension		Thread		
J350	F	R	M	- 25	25	TR10x2		
Material	Form F	Right-hand thread	Metric	d2	b1	Trapezoidal thread	Diameter	Pitch

Options:
Form S = Sleeve
Form F = With flange

Nut materials:
For alternate material offerings use the index on pages 1158-1159
iglide® J - standard, low wear material
iglide® L280 (W300)* - High load material
iglide® A180 - FDA compliant material
iglide® J350 - High temperature material
iglide® R - low-cost, low-friction material

***W300 is the European material equivalent for iglide® L280**

Dimensions [mm]

Part No.	Effective supporting surface [mm²]	d2	d3	d4	d5	b1	b2	Thread d1 x P	max. stat. F axial [N]
J350FRM-2020TR08x1.5	225	20	36	28	4	20	8	Tr08x1.5	675
J350FRM-2525TR10x2	352	25	42	34	5	25	10	Tr10x2	1,056
J350FRM-2835TR12x3	576	28	48	38	6	35	12	Tr12x3	1,728
J350FRM-2835TR16x2	822	28	48	38	6	35	12	Tr16x2	2,466
J350FRM-2835TR16x4	768	28	48	38	6	35	12	Tr16x4	2,304
J350FRM-2835TR18x4	878	28	48	38	6	35	12	Tr18x4	2,634
J350FRM-3244TR20x4	1,242	32	55	45	7	44	12	Tr20x4	3,726
J350FRM-3244TR24x5	1,484	32	55	45	7	44	12	Tr24x5	4,452

DryLin® - Lead screw technology - Product range

DryLin® disc, right-hand thread, made from iglide® J

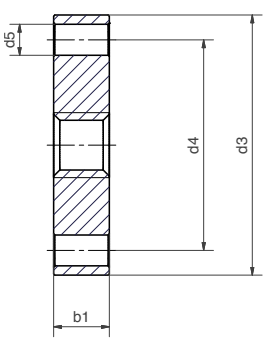

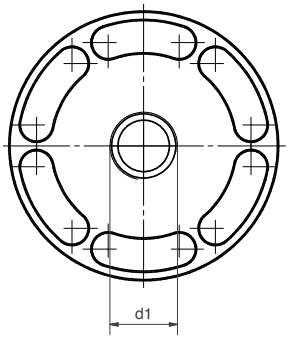

Use in conjunction with a separate nut to adjust axial clearance

Order key

Part number	Dimension	Thread

J D R M - 42 09 TR10x2

Material	DryLin® Disc	Right-hand thread	Metric	d3	b1	Trapezoidal thread	Diameter	Pitch

Dimensions [mm]

Part No.	Effective supporting surface [mm²]	d3	d4	d5	b1	Thread d1 x P	max. stat. F axial[49] [N]
JDRM-4209TR10x2	127	42	34	5	9	Tr10x2	508
JDRM-4811TR12x3	181	48	38	6	11	Tr12x3	724
JDRM-4811TR14x4	207	48	38	6	11	Tr14x4	828
JDRM-4811TR16x4	241	48	38	6	11	Tr16x4	964
JDRM-4811TR18x4	276	48	38	6	11	Tr18x4	1,104
JDRM-5513TR20x4	367	55	45	7	13	Tr20x4	1,468
JDRM-5513TR24x5	439	55	45	7	13	Tr24x5	1,756
JDRM-6214TR30x6	551	62	50	7	14	Tr30x6	2,204
JDRM-7016TR36x6	829	70	58	7	16	Tr36x6	3,316

[49] Max. stat. F axial can be added when used with flange nut

Notes

DryLin® - Lead screw technology - Product range

Lead screw nuts from linear modules

The lead screw nuts are in use in our HTS (SHT)* linear modules ➤ From page 1065

Square lead screw nuts

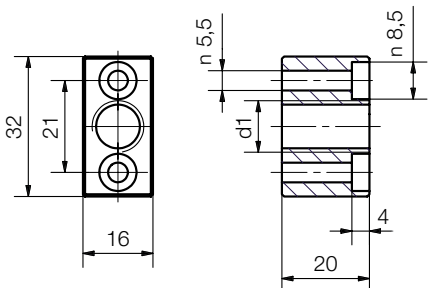

Dimensions [mm]

Part No.	Thread	Hand of rotation	from HTS linear module	
HTS-1210-TRM10x2	Tr10x2	right	HTS-12	➤ p. 1248
HTS-1210-TRM10x2-L	Tr10x2	left	HTS-12	➤ p. 1248
HTS-1210-TRM10x3	Tr10x3	right	HTS-12	➤ p. 1248
HTS-1210-TRM10x3-L	Tr10x3	left	HTS-12	➤ p. 1248
HTS-1210-SM10x12	Sg10x12	right	HTSS-12	➤ p. 1251
HTS-1210-SM10x12-L	Sg10x12	left	HTSS-12	➤ p. 1251
HTS-1210-SM10x50	Sg10x50	right	HTSS-12	➤ p. 1251
HTS-1210-SM10x50-L	Sg10x50	left	HTSS-12	➤ p. 1251

Lead screw nuts with flange

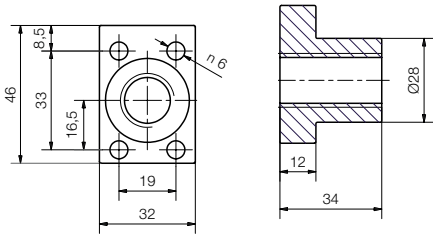

Please note: not symmetrical

Dimensions [mm]

Part No.	Thread	Hand of rotation	from HTS linear module	
HTS-2018-SM18x100	Sg18x100	right	HTSS-20	➤ p. 1251
HTS-2018-SM18x100-L	Sg18x100	left	HTSS-20	➤ p. 1251
HTS-2018-TRM18x4	Tr18x4	right	HTSS-20	➤ p. 1251
HTS-2018-TRM18x4-L	Tr18x4	left	HTS-20	➤ p. 1248
HTS-2018-TRM18x8	Tr18x8P4	right	HTS-20	➤ p. 1248
HTS-2018-TRM18x8-L	Tr18x8P4	left	HTS-20	➤ p. 1248

Lead screw nuts

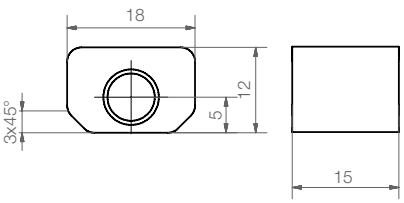

Dimensions [mm]

Part No.	Thread	Hand of rotation	from HTS linear module	
SWZ-063001	M08x1	right	SLW-0630	➤ p. 1264
SWZ-063003	M08x1	left	SLW-0630	➤ p. 1264
SWZ-063009	Tr08x1,5	right	SLW-0630	➤ p. 1264
SWZ-063010	Tr08x1,5	left	SLW-0630	➤ p. 1264
SWZ-063007	Sg08x10	right	SLW-0630	➤ p. 1264
SWZ-063008	Sg08x10	left	SLW-0630	➤ p. 1264
SWZ-063004	Sg08x10	right	SLW-0630	➤ p. 1264

*SHT is the European equivalent for HTS

DryLin® - Lead screw technology - Product range

Lead screw nuts with locating spigot

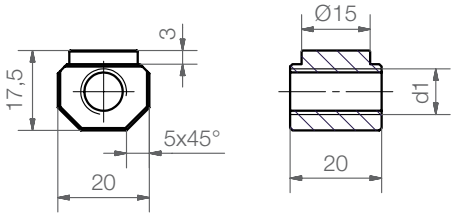

Dimensions [mm]

Part No.	Thread	Hand of rotation	from SLW linear module	
SWZ-W-104003	Tr10x2	right	SLW-1040	➤ p. 1264
SWZ-W-104004	Tr10x2	left	SLW-1040	➤ p. 1264
SWZ-W-104009	Tr10x3	right	SLW-1040	➤ p. 1264
SWZ-W-104015	Tr10x3	left	SLW-1040	➤ p. 1264
SWZ-W-104005	Sg10x12	right	SLWS-1040	➤ p. 1267
SWZ-W-104005-L	Sg10x12	left	SLWS-1040	➤ p. 1267
SWZ-W-104007	Sg10x50	right	SLWS-1040	➤ p. 1267
SWZ-W-104010	Sg10x50	left	SLWS-1040	➤ p. 1267

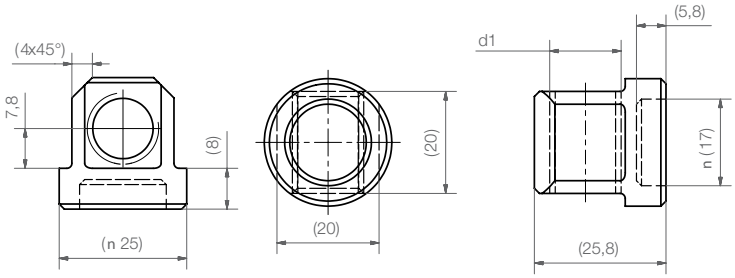

Dimensions [mm]

Part No.	Thread	Hand of rotation	from SLW linear module	
SWZ-W-166002	Tr14x3	right	SLW-1660	➤ p. 1264
SWZ-W-166001	Tr14x4	right	SLW-1660	➤ p. 1264
SWZ-W-166003	Tr14x4	left	SLW-1660	➤ p. 1264

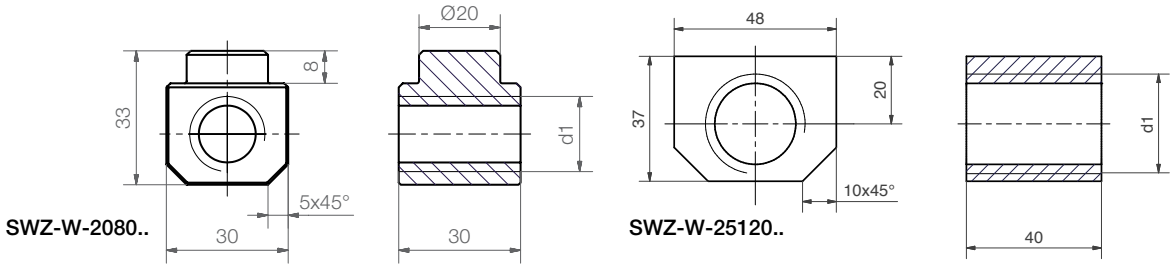

SWZ-W-2080..

SWZ-W-25120..

Dimensions [mm]

Part No.	Thread	Hand of rotation	from SLW linear module	
SWZ-W-208003	Tr18x4	right	SLW-2080	➤ p. 1264
SWZ-W-208004	Tr18x4	left	SLW-2080	➤ p. 1264
SWZ-W-208008	Tr18x8P4	right	SLW-2080	➤ p. 1264
SWZ-W-208009	Tr18x8P4	left	SLW-2080	➤ p. 1264
SWZ-W-208006	Sg18x100	right	SLWS-2080	➤ p. 1267
SWZ-W-208007	Sg18x100	left	SLWS-2080	➤ p. 1267
SWZ-W-208010	Sg18x24	right	SLWS-2080	➤ p. 1267
SWZ-W-208011	Sg18x24	left	SLWS-2080	➤ p. 1267
SWZ-W-2512001*	Tr24x5	right	SLW-25120	➤ p. 1264
SWZ-W-2512002*	Tr24x5	left	SLW-25120	➤ p. 1264

* without locating spigot

DryLin® - Lead screw technology - Product range

Split lead screw nuts, right-hand thread
iglide® J – The standard low-wear nut material

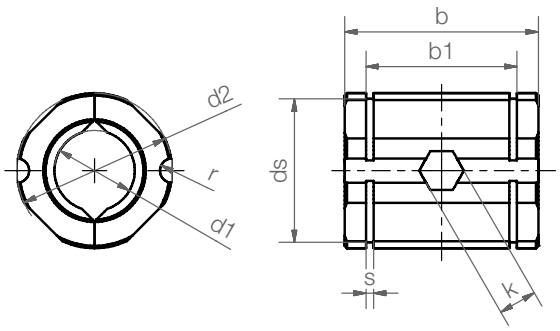

Order key

Part number	Dimension	Thread

J T R M - 22 30 TR10x2

Material	Split nut	Right-hand thread	Metric	d2	b1	Trapezoidal thread	Diameter	Pitch

This part includes 2 nut halves and 1 piece nut each based on DIN 934 made from 304 stainless steel (V2A) to prevent twisting

Technical data

Part No.	max. load axial		Mounting with nut
	static[50]	static[51]	
	[N]	[N]	DIN 934
JTRM-2230TR10x2	300	500	M4
JTRM-3240TR20x4	1,000	1,500	M5
JTRM-3240TR20x8P4	1,000	1,500	M5

Dimensions [mm]

Part No.	b	b1	d1	d2	ds	k	r	s
JTRM-2230TR10x2	30	22.6	Tr10x2	22	20.5	7	1.5	1.3
JTRM-3240TR20x4	40	31.2	Tr20x4	32	29.6	8	2.5	1.6
JTRM-3240TR20x8P4	40	31.2	Tr20x8P4	32	29.6	8	2.5	1.6

[50] Mounting in the housing via radially inserted nut DIN934
[51] Mounting in the housing via circlips DIN471

DryLin® - Lead screw technology - Product range

Also available with pillow block

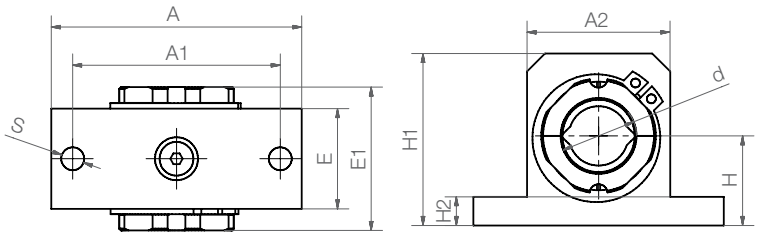

Order key

Part number										Thread		
R	G	A	S	-	J	T	R	M	-	TR10x2		
Linear housing	Aluminium	Small		Material	Split nut	Right-hand thread	Metric			Trapezoidal thread	Diameter	Pitch

Technical data

Part No.	Nut	Locking ring
RGAS-JTRM-TR10x2	DIN 439 M4	DIN 471-A22
RGAS-JTRM-TR20x4	DIN 439 M5	DIN 471-A32
RGAS-JTRM-TR20x8P4	DIN 439 M5	DIN 471-A32

Dimensions [mm]

Part No.	d	H	H1	H2	A	A1	A2	E	E1	S
RGAS-JTRM-TR10x2	Tr10x2	18	35	6	52	42	30	20	32	5.3
RGAS-JTRM-TR20x4	Tr20x4	25	48	8	70	58	40	28	40	6.4
RGAS-JTRM-TR20x8P4	Tr20x8P4	25	48	8	70	58	40	28	40	6.4

DryLin® - Lead screw technology - Product range

Spherical trapezoidal lead screw nut with spherical ball in flanged bearing housing

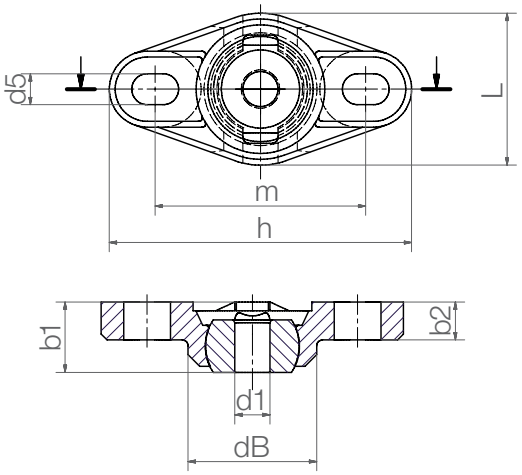

Order key

Part number									Thread	
J	F	R	K	M	-	EFOM	-		TR08x1.5	
Material	Form F	Right-hand thread	Series K	Metric		Flanged bearing housing			Trapezoidal thread	Diameter	Pitch

Options:
SG = High helix thread
TR = Trapezoidal thread

Dimensions [mm]

Part No.	Effective supporting surface [mm²]	d1	h	L	b1	b2	m	dB	d5	Thread	max. stat. F axial [N]	Pivoting angle	
Trapezoidal thread										d1 x P		stat.	dyn.
JFRKM-EFOM-TR08x1.5	102	8	52	26	12	6.5	36	22.2	5.3x8	Tr08x1.5	100	25°	30°
JFRKM-EFOM-TR10x2	127	10	52	26	12	6.5	36	22.2	5.3x8	Tr10x2	100	25°	30°
JFRKM-EFOM-TR10x3	120	10	52	26	12	6.5	36	22.2	5.3x8	Tr10x3	100	25°	30°
High helix thread													
JFRKM-EFOM-SG08x15	61	8	52	26	12	6.5	36	22.2	5.3x8	Sg08x15	50	25°	30°
JFRKM-EFOM-SG10x12	82	10	52	26	12	6.5	36	22.2	5.3x8	Sg10x12	50	25°	30°

DryLin® - Lead screw technology - Product range

Spherical lead screw nut with spherical ball in pillow block housing

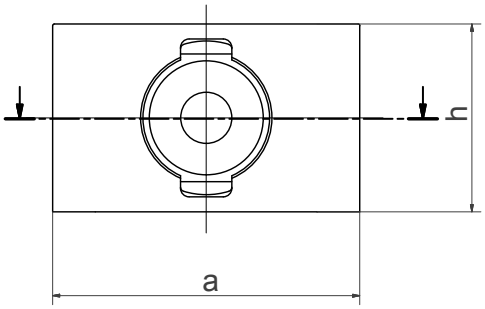

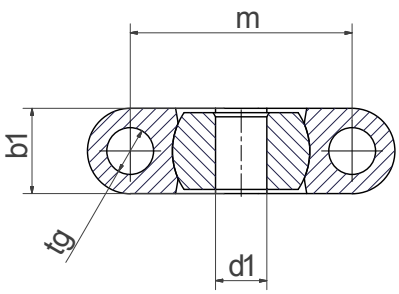

Order key

Part number									Thread		
J	F	R	K	M	-	ESTM	-	TR08x1.5			
Material	Form F	Right-hand thread	Series K	Metric		Pillow block bearing housing			Trapezoidal thread	Diameter	Pitch

Dimensions [mm]

Part No.	Effective supporting surface [mm²]	h	a	b1	m	tg	Thread d1 x P	max. stat. axial F [N]	Pivoting angle stat.	Pivoting angle dyn.
JFRKM-ESTM-TR08x1.5	102	22	36	10	26	5.5	Tr08x1.5	100	25°	30°
JFRKM-ESTM-TR10x2	127	22	36	10	26	5.5	Tr10x2	100	25°	30°
JFRKM-ESTM-TR10x3	120	22	36	10	26	5.5	Tr10x3	100	25°	30°
JFRKM-ESTM-SG08x15	61	22	36	10	26	5.5	Sg08x15	50	25°	30°
JFRKM-ESTM-SG10x12	82	22	36	10	26	5.5	Sg10x12	50	25°	30°

DryLin® - Lead screw technology - Product range

Quick-release nut – Fast forward

Fast forward mechanism: A combination of accurate positioning and quick manual adjustment with trapezoidal lead screw nuts.

- For quick format adjustments
- Incl. brake through automatic interlocking with thread
- Self-lubricating
- Housing: AL anodized, lead screw nut made from iglide® J
- Tough and reliable
- Only recommended for horizontal applications
- Max. axial load stat.: 200 N, dyn.: 50 N

see HTS-FF ➤ **Page 1254**

Order key

Part number	Thread
F T R M - FF - 10x2	

With flange	Trapezoidal thread	Right-hand thread	Metric	Fast Forward	Diameter	Pitch

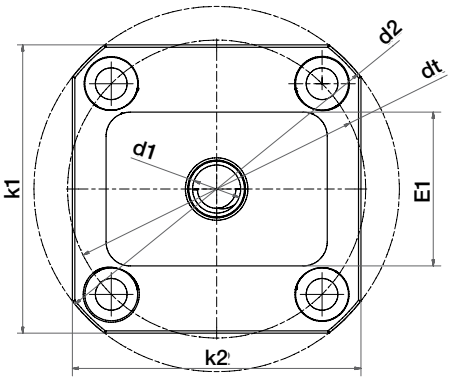

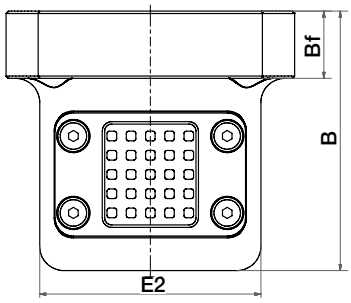

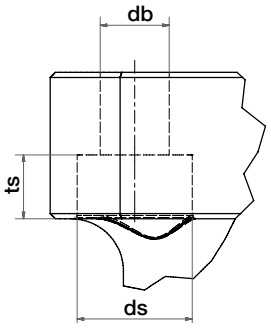

Dimensions [mm]

Part No.	d1	d2	dt	B	Bf	ts	db	ds	k1	k2	E1	E2
FTRM-FF-10x2	Tr10x2	76	62	54	14	6.1	6.6	11	60	60	32	46

1.

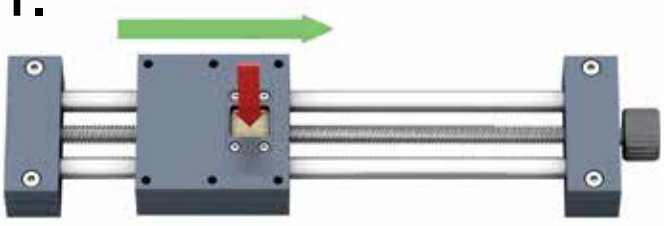

2.

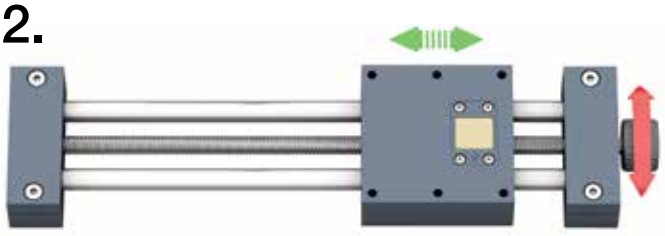

press > disengage > move manually > click into place > fine-tuning

Notes

DryLin® - Lead screw technology - Product range

Lead screw support blocks

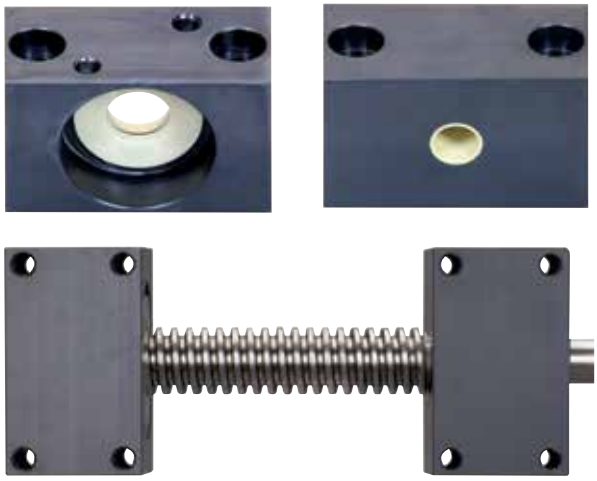

Order key

Part No.	Thread	Options

SLS - 10x2 - FL - LH

- SLS: Lead screw support
- 10x2: Diameter
- Pitch
- FL: Fixed bearing
- LH: Left-hand thread option

Options:
FL = Fixed bearing
LL = Floating bearing
LH = Left-thread option only for TR10x2, R10x3, TR18x4, TR24x5

Anodized support block
FL: Fixed bearing with anodized shaft collar with RH thread (standard) and maintenance free iglide® plain bearing[52)]
LL: Floating bearing with maintenance free iglide® plain bearing

Accessories
➤ DryLin® drive technology, page 1293

Available as a motorized version
➤ Page 1317

Fixed bearing

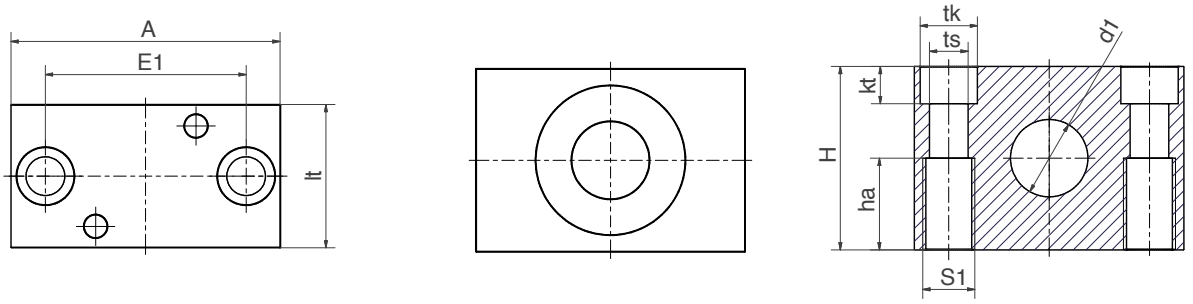

Floating bearing

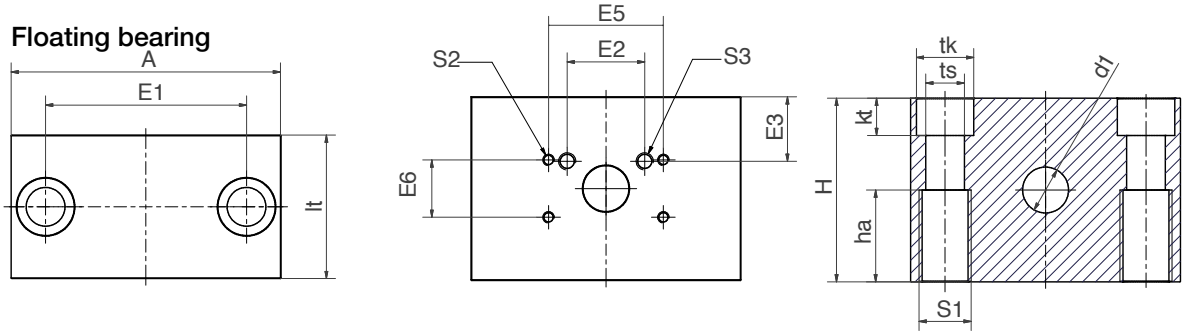

[52)] FL support block with TR10x2, TR10x3, TR18x4, TR24x5 lead screw also available with clamp rings with left thread

DryLin® - Lead screw technology - Product range

Technical data and dimensions [mm]

Part No.	Weight [g]	Max. stat. bearing load axial [N]	S1	S2	S3
SLS-10x2-LL	115	-	M8	M4	M6
SLS-10x2-FL (LH)	88	700	M8	-	-
SLS-10x3-LL	115	-	M8	M4	M6
SLS-10x3-FL (LH)	88	700	M8	-	-
SLS-10x12-LL	115	-	M8	M4	M6
SLS-10x12-FL	88	700 [53]	M8	-	-
SLS-10x50-LL	115	-	M8	M4	M6
SLS-10x50-FL	88	700 [53]	M8	-	-
SLS-18x4-LL	295	-	M10	M4	M6
SLS-18x4-FL (LH)	205	1,600	M10	-	-
SLS-18x8P4-LL	295	-	M10	M4	M6
SLS-18x8P4-FL	205	1,600	M10	-	-
SLS-18x24-LL	295	-	M10	M4	M6
SLS-18x24-FL	205	1,600 [53]	M10	-	-
SLS-18x100-LL	295	-	M10	M4	M6
SLS-18x100-FL	205	1,600 [53]	M10	-	-
SLS-24x5-LL	725	-	M16	M4	M6
SLS-24x5-FL (LH)	525	2,500	M16	-	-

Part No.	A	H	E1	E2	E3	E5	E6	lt	kt	tk	ts	d1	ha
SLS-10x2-LL	50	32	36	27	6.5	40	20	30	6.5	11	6.6	10	16
SLS-10x2-FL (LH)	50	32	36	-	-	-	-	30	6.5	11	6.6	10	16
SLS-10x3-LL	50	32	36	27	6.5	40	20	30	6.5	11	6.6	10	16
SLS-10x3-FL (LH)	50	32	36	-	-	-	-	30	6.5	11	6.6	10	16
SLS-10x12-LL	50	32	36	27	6.5	40	20	30	6.5	11	6.6	10	16
SLS-10x12-FL	50	32	36	-	-	-	-	30	6.5	11	6.6	10	16
SLS-10x50-LL	50	32	36	27	6.5	40	20	30	6.5	11	6.6	10	16
SLS-10x50-FL	50	32	36	-	-	-	-	30	6.5	11	6.6	10	16
SLS-18x4-LL [54]	72	46	54	27	13.5	40	20	36	8.6	15	9	12	23
SLS-18x4-FL (LH)	72	46	54	-	-	-	-	36	8.6	15	9	18	23
SLS-18x8P4-LL [54]	72	46	54	27	13.5	40	20	36	8.6	15	9	12	23
SLS-18x8P4-FL	72	46	54	-	-	-	-	36	8.6	15	9	18	23
SLS-18x24-LL [54]	72	46	54	27	13.5	40	20	36	8.6	15	9	12	23
SLS-18x24-FL [55]	72	46	54	-	-	-	-	36	8.6	15	9	18	23
SLS-18x100-LL [54]	72	46	54	27	13.5	40	20	36	8.6	15	9	12	23
SLS-18x100-FL [55]	72	46	54	-	-	-	-	36	8.6	15	9	18	23
SLS-24x5-LL [54]	94	64	70	27	22.5	40	20	50	13	20	13.5	14	32
SLS-24x5-FL (LH)	94	64	70	-	-	-	-	50	13	20	13.5	24	32

[53] Can exceed max. stat. load of the nut
[54] Lead screw end must be turned to d1-value
[55] Lead screw end must be turned to 18 mm
Similar technical data for both right and left-threads

DryLin® - Lead screw technology - Product range

DryLin® lead screw nut housing

- Standard lead screw nuts secured with fasteners
- May be fixed from above
- One retainer can be used for various thread geometry
- Limitless combinations

Order key

Part number	Lead screw nut options

MH - 1210 - TR10x2 - R - J

MH	1210	TR10x2	R	J
Lead screw nut housing	Nut design (see drawing)	Trapezoidal thread	Diameter	Pitch	Right-hand thread	Material

MH-2835-AL / MH-3244-AL

MH-ZB0810-AL

MH-2018-AL

MH-1210-AL

DryLin® - Lead screw technology - Product range

Fully assembled with nut or individual

MH-1210-AL

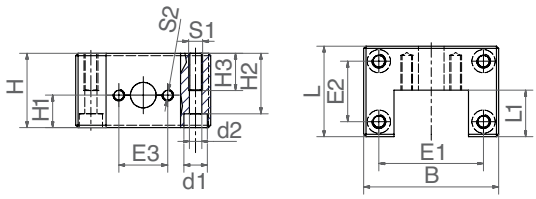

MH-2018-AL

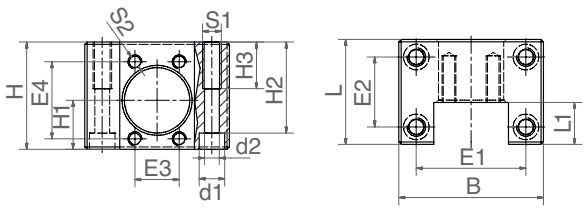

MH-2835-AL

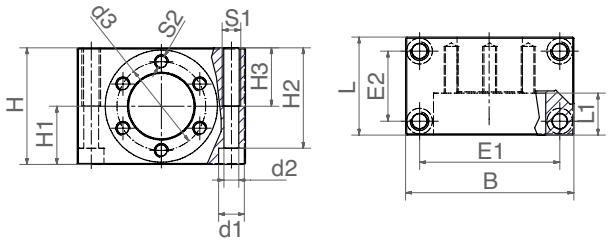

MH-3244-AL

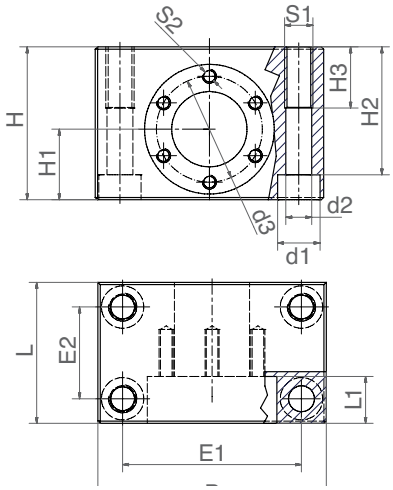

MH-ZB0810-AL

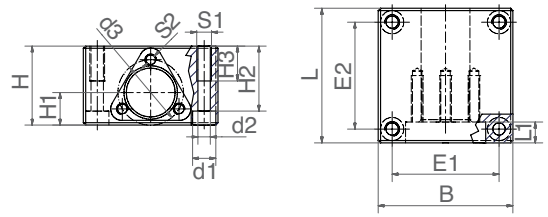

Dimensions [mm]

Part No.	H	H1	H2	H3	S1	S2	B	L	L1	E1	E2	E3	E4	d1	d2	d3	Can be combined with SLS
							± 0.3	± 0.3		±0.15	±0.15						
MH-1210-AL	32	14	26	16	M6	M5	58	39	20	45	26	21	-	10	5.3	-	✓
MH-2018-AL	46	21	39	20	M8	M6	62	45	18	47	30	19	33	11	6.4	-	✓
MH-2835-AL	50	25	43	25	M8	M6	72	42	18	60	30	-	-	11	6.4	38	×
MH-3244-AL	65	30	54.4	26	M12	M6	97	60	20	76	39	-	-	18	11	45	✓
MH-ZB0810-AL	34	14	28	15	M6	M5	58	34	9	46	46	-	-	10	5.3	28.2	✓

Part No.	Nut design	Thread
MH-1210-AL	HTS-1210-TRM	Tr10x2 / Tr10x3 / Sg10x12 / Sg10x50
MH-2018-AL	HTS-2018-TRM	Tr18x4 / Tr18x8P4 / Sg18x24 / Sg18x100
MH-2835-AL	FRM-2835	Tr12x3 / Tr12x6P3 / Sg12x25 / Tr14x3 / Tr14x4 / Tr16x2 / Tr16x4 / Tr16x8P4 / Tr18x4 / Tr18x8P4 / Sg18x24 / Sg18x100
MH-3244-AL	FRM-3244	Tr20x4 / Tr20x8P4 / Tr24x5
MH-ZB0810-AL	Zero backlash	Sg8x10 / Sg8x15 / Sg10x12 / Sg10x50

DryLin® - Lead screw technology - Product range

Lead screw support with ball bearings

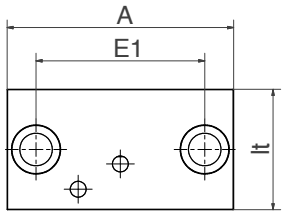

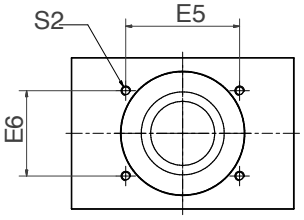

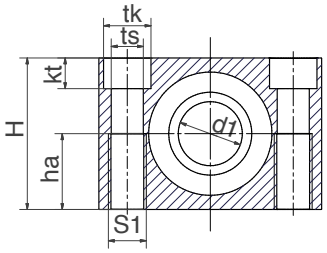

Order key

Part No.	Thread	Options
SLS	- 10x2	- BB
Lead screw support	Diameter	Pitch	Fixed bearing

Accessories
➤ DryLin® drive technology, page 1293

Available as a motorized version
➤ Page 1317

Technical data and dimensions [mm]

Part No.	Weight [g]	Max. stat. load capacity axial [N]	S1	S2
SLS-10x2-BB	110	350	M8	M4
SLS-10x12-BB	110	350	M8	M4
SLS-10x50-BB	110	350	M8	M4
SLS-18x4-BB	265	1,000	M10	M4
SLS-18x8P4-BB	265	1,000	M10	M4
SLS-18x24-BB	265	1,000	M10	M4
SLS-18x100-BB	265	1,000	M10	M4
SLS-24x5-BB	350	1,500	M16	M4

Part No.	A	H	E1	E5	E6	lt	kt	tk	ts	d1	ha
SLS-10x2-BB	50	32	36	40	20	30	6.5	11	6.6	10	16
SLS-10x12-BB	50	32	36	40	20	30	6.5	11	6.6	10	16
SLS-10x50-BB	50	32	36	40	20	30	6.5	11	6.6	10	16
SLS-18x4-BB	72	46	54	48	36	36	8.6	15	9	18	23
SLS-18x8P4-BB	72	46	54	48	36	36	8.6	15	9	18	23
SLS-18x24-BB[55)]	72	46	54	48	36	36	8.6	15	9	18	23
SLS-18x100-BB[55)]	72	46	54	48	36	36	8.6	15	9	18	23
SLS-24x5-BB	94	64	70	48	36	50	13	20	13.5	24	32

[55)] Lead screw end must be turned to 18 mm

DryLin® - Lead screw technology - Product range

DryLin® shaft collar, right/left-handed

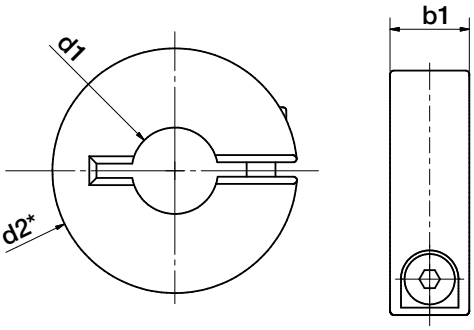

Order key

Part number					Thread
CRR	- 01	-	TR	10x2	
Clamping ring	Type		High helix thread	Diameter	Pitch

Dimensions [mm]

Part No. right-handed	Thread d1 x P	d2[56] h9	b1	max. stat. F axial [N]
CRR-01-TR08x1.5	Tr08x1.5	16	9	1,530
CRR-01-TR10x2	Tr10x2	24	8	1,800
CRR-01-TR12x3	Tr12x3	28	8	2,096
CRR-01-TR14x4	Tr14x4	30	11	3,312
CRR-01-TR16x4	Tr16x4	34	11	3,840
CRR-01-TR18x4	Tr18x4	36	13	5,216
CRR-01-TR20x4	Tr20x4	45	15	6,784
CRR-01-TR24x5	Tr24x5	45	15	8,096

Part No. left-handed	Thread d1 x P	d2[56] h9	b1	max. stat. F axial [N]
CRL-01-TR08x1.5	Tr08x1.5	16	9	1,530
CRL-01-TR10x2	Tr10x2	24	8	1,800
CRL-01-TR12x3	Tr12x3	28	8	2,096
CRL-01-TR14x4	Tr14x4	30	11	3,312
CRL-01-TR16x4	Tr16x4	34	11	3,840
CRL-01-TR18x4	Tr18x4	36	13	5,216
CRL-01-TR20x4	Tr20x4	45	15	6,784
CRL-01-TR24x5	Tr24x5	45	15	8,096

[56] Outside clamping ring dimension. Screw head may protrude. Installation dimension: d2 (+2mm)

Notes

8. DryLin®..

Drive technology

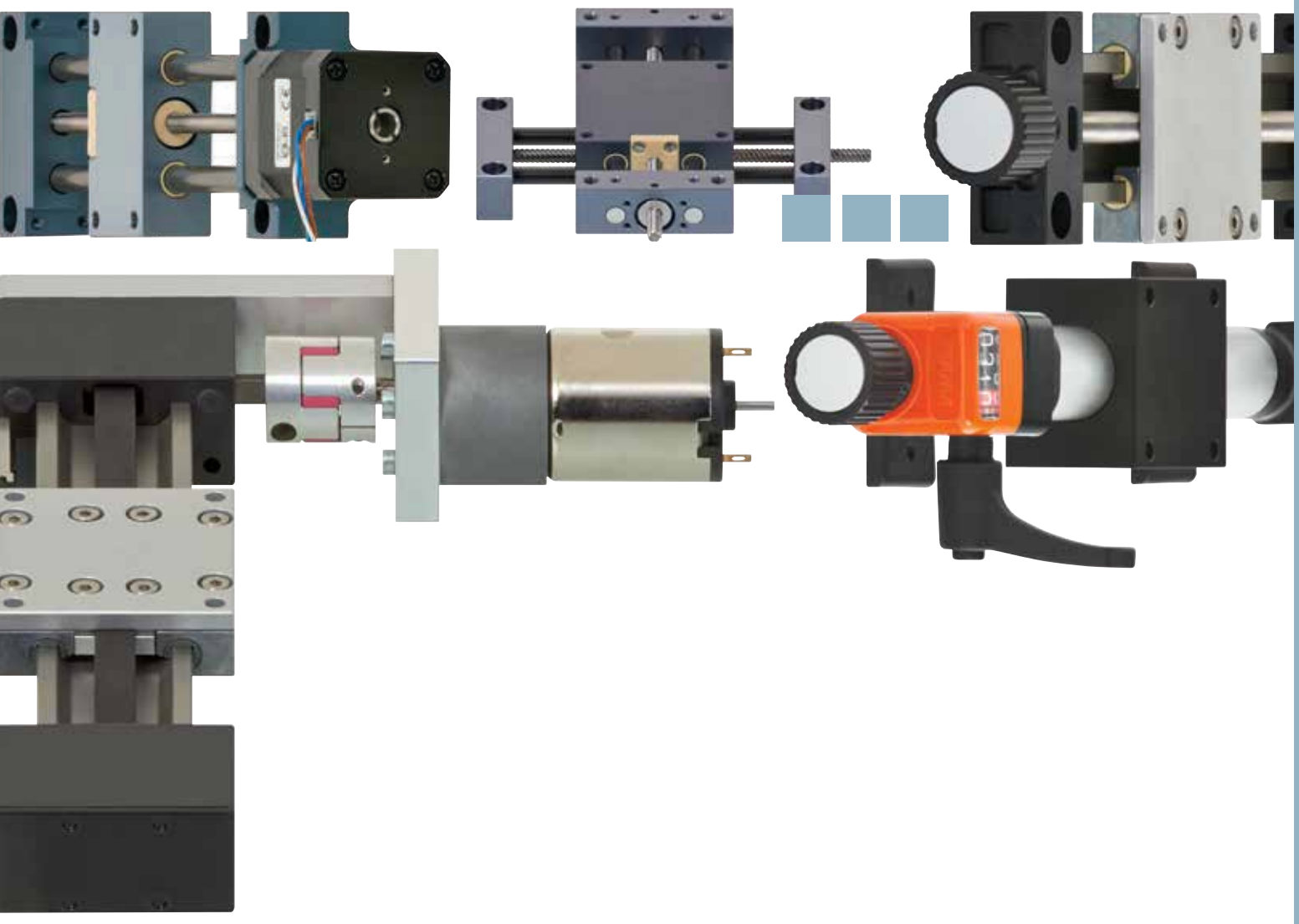

...plastics

CAMERA/LASER ADJUSTMENT IN LABELING SYSTEM
In this labeling system the camera and laser positioning are guided with two DryLin® HTS/SLWE-XY cross slide units.

DryLin® Drive technology - Application examples

MILLING HEAD POSITIONING
The lack of oil means aluminum chips and dust cannot contaminate the bearing system

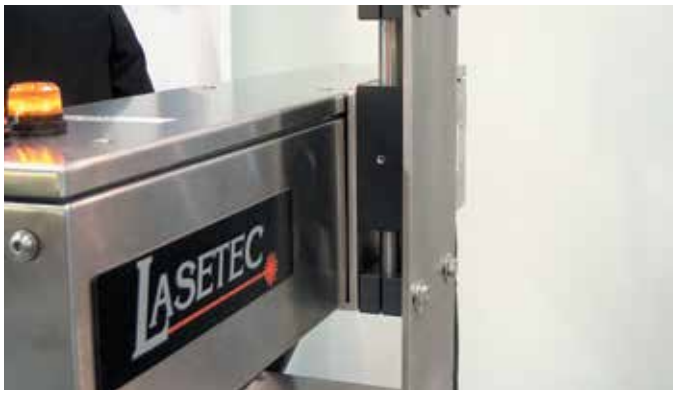

HEIGHT ADJUSTMENT OF CODING DEVICE
The DryLin® HTS lead screw unit gives variable and precise adjustment, free from any maintenance or lubrication.

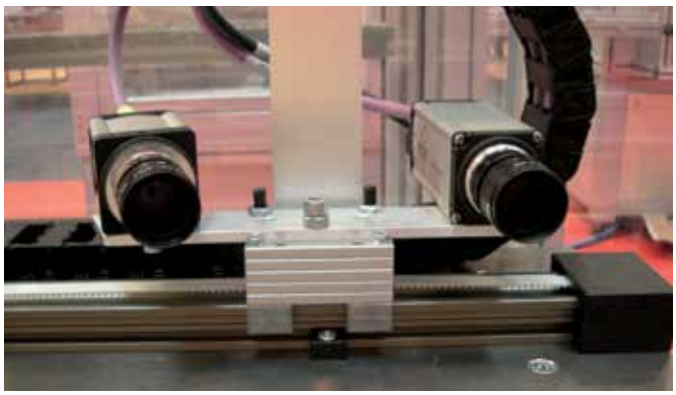

CAMERA ADJUSTMENT
The DryLin® ZLW belt drive gives quiet, smooth, and lubrication-free operation for this adjustable camera mount on a conveyor system.

CUT OFF SAW
Lead screw table used for fine adjustment on aluminum cut-off saw

ADJUSTMENT OF INSPECTION CAMERA
DryLin® ZLW toothed belt axis in an inspection camera adjustment, used for checking the position of seals.

WEB EDGE DETECTION
The DryLin® SLW lead screw unit with position indicator and hand wheel adjusts the sensors which detect the edge of the webbing and print marks on this packaging machine.

DryLin® Drive technology - Product overview

Linear modules HTS

HTS
Standard

➤Page 1248

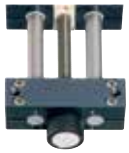

HTS-PL
Preload

➤Page 1249

HTSC
Compact carriage

➤Page 1250

HTSS
with high helix thread

➤Page 1251

HTS-BB
With ball bearing lead screw supports

➤Page 1252

HTS-FF
Fast Forward
Quick release nut

➤Page 1254

Linear modules SLW

SLW
Compact
Cost-effective

➤Page 1264

SLWE-PL
Preload

➤Page 1265

SLWE-BB
With ball bearing lead screw supports

➤Page 1266

SLWS
Compact with high helix pitch lead screw

➤Page 1267

SLW-PT
With protected lead screw

➤Page 1268

SLWT
Controlled separately
Double screw system

➤Page 1269

Linear modules HTSP – Featuring plastic carriages and end blocks

HTSP Mini
Small and low-cost

➤Page 1277

HTSP
Cost effective

➤Page 1278

HTSP-FF
Fast Forward
Quick release nut

➤Page 1280

SET - Easy Tube

SET

➤Page 1287

SET-F
With flange

➤Page 1288

SETM
With measurement scale

➤Page 1289

SETB
Preloaded on one side

➤Page 1290

SETC
low weight

➤Page 1291

Tooth Belt Axis ZLW

ZLW
Belt drive

➤Page 1310

ZLW Eco
Low cost version

➤Page 1310

ZLW-OD
Dual carriage

➤Page 1312

ZLW-LT/-UW/-SW
Low temperature
Underwater

➤Page 1313

ZAW
Cantilever drive

➤Page 1314

Clamps, slot nuts
For sensors and mounting

➤Page 1315

HTS-HTX
High temperature up to 356°F (+180 °C)

➤Page 1256

HTSC-HYD
Hygienic design for wash-down

➤Page 1257

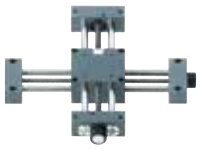

HTS-XY
XY-Table

➤Page 1258

SAW
Lead screw linear axis

➤Page 1270

SLW-ES
Stainless steel

➤Page 1271

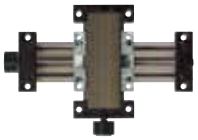

SLW-XY
Compact cross slides

➤Page 1272

SLW-XY-ES
Compact cross slide, stainless steel

➤Page 1273

Miniature linear modules SLN

Miniature linear modules SLN

➤Page 1281

SLN Basic

➤Page 1283

SLN -Preload/ Adjustable

➤Page 1284

Accessories for DryLin® drive technology

Position indicator

➤Page 1296

Lead screw clamp and rotary knob

➤Page 1297

V-drive

➤Page 1298

Adapter plate

➤Page 1300

Stainless steel angle kit for Y-Z assembly

➤Page 1301

Flexshaft

➤Page 1302

DryLin® electric drive technology with motors and accessories

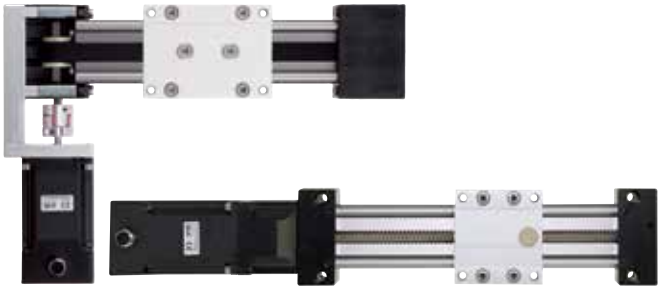

Linear stages with a motor, gantries, lead screw with integrated motors and accessories

➤Page 1317

DryLin® Drive technology - Linear modules

The DryLin® product portfolio provides self-lubricating linear drives that are driven either by a trapezoidal thread, high helix thread or a timing belt. Choose a suitable version from lightweight solid plastic units up to heavy duty stainless steel solutions. In all systems, the stroke length is made to your specifications with optional hand-wheel or motor drives available.

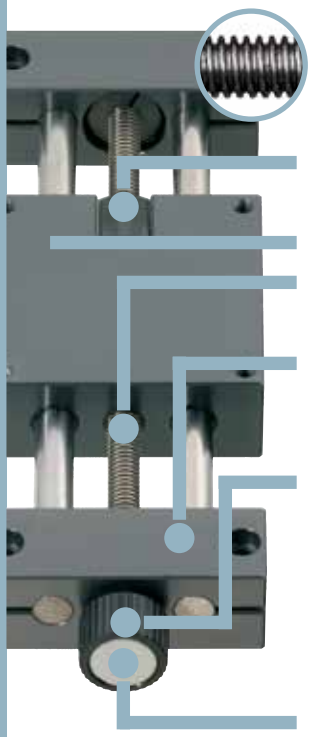

Linear modules with lead screw drives

Plastic bearings and lead screw nuts offer self-lubricating operation

3 shaft materials available

8 trapezoidal thread pitches, 4 high-helix thread pitches

Carriage and end blocks made from stainless steel, aluminum, zinc or plastic

Lead screws with standard or custom journals available (Steel, stainless steel- or aluminum lead screws)

Position indicators, clamps and hand wheels, available

When to use it?

- For format adjustments
- In extreme environments
- When a cost-effective, pre-assembled solution is required
- When corrosion resistance is required
- For low noise

When not to use it?

- For high loads combined with very high speeds
- When positioning accuracy <0.1 mm is necessary
- When high cycles are required in continuous operation

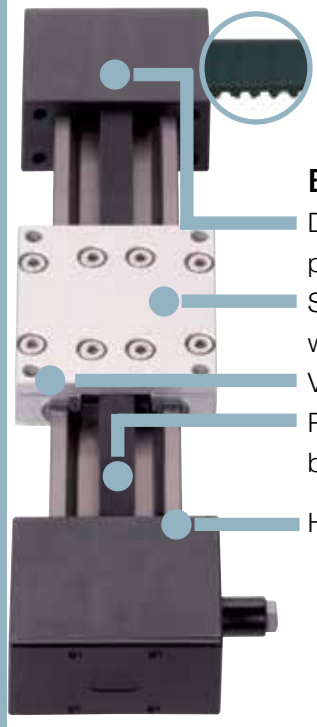

Belt drive

Deep grooved ball bearing for belt pulley

Self-lubricating linear guide system with plastic plain bearings

Various carriage lengths

Polyurethane or neoprene timing belts

Hard-anodized aluminum profile

When to use it?

- To quickly position smaller loads
- Quiet operation
- Compact
- Underwater options available
- Cost-effective solution
- Long-term use

When not to use it?

- When high loads need to travel at high dynamic speeds
- When positioning accuracy <0.25 mm is necessary

Temperature[91)]

Standard	HTX-Version
+140°F (+60°C)	+356°F (+180°C)
+32°F (-0°C)	-22°F (–30°C)

[91)] Does not apply to accessories

DryLin® Drive technology - Product overview

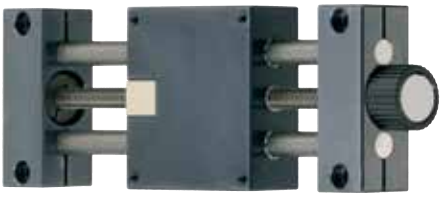

Linear modules HTS

- Self-lubricating
- Trapezoidal or high-helix lead screw drives
- Ball-bearing mounted lead screw units available for higher speeds
- Carriage in either long or compact design
- Features machined blocks and ground shafting

Linear modules SLW

- Self-lubricating, based on DryLin® W
- Torsion-resistant dual shaft system
- Cost-effective using casting and extrusions
- Trapezoidal or high-helix lead screw drives
- Suitable for manual and motor-operated adjustments

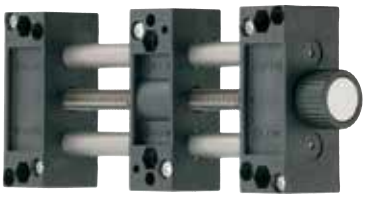

Linear module "light" HTSP

- Features plastic blocks and ground shafting
- Completely self-lubricating linear modules
- Lightweight
- Cost-effective
- Corrosion resistant

Miniature linear modules SLN

- Self-lubricating, based on DryLin® N
- Low profile height (22 mm), light and compact
- For motors or hand driven applications

Linear modules SET Easy Tube

- Corrosion resistant
- Low weight through aluminum and stainless steel
- Simple, clean design

Accessories for linear modules

- Position indicator
- Hand wheels in many options
- Lead screw clamps
- Angular drives

Belt drives ZLW

- Clean, dry-running linear bearings
- For fast positioning
- Ball bearings in belt pulleys

DryLin® E - Electric drive technology

Self-lubricating linear modules with motors

- Ready to install with motor, cable and initiator options

DryLin® Drive technology - Technical Data

Linear modules

Linear module	Shaft Ø [mm]	Lead screw Thread Type TR = Trapezoidal SG = High Helix	OD x Lead	Screws Self locking thread (non-beltdrivable)	Carriages length [mm]	Compatible with DryLin® E motors
HTS-08	8	Tr	6x2	+	35/65	+
	8	Sg	6.35x12.7	-		
HTS-12	12	Tr	10x2	+	30/85	+
	12	Sg	10x12	-		
	12	Sg	10x50	-		
HTS-20	20	Tr	18x4	+	36/130	+
	20	Tr	18x8	+		
	20	Sg	18x100	-		
HTS-30	30	Tr	24x5	+	50/180	+
HTSC-40	40	Tr	26x5	+	70	+
HTSC-50	50	Tr	30x6	+	80	+
SLW-0630	□5	M	M8x1.25	+	60/100	+**
	5	Tr	8x1.5	+		
	5	Sg	8x15	-		
SLW-1040	10	Tr	10x2	+	69/100/150/200	+**
SLW-1080	10	Sg	10x12	-		
SLW-10120	10	Sg	10x50	-		
SLW-1660	16	Tr	14x4	+	100/150/200	+
SLW-2080	20	Tr	18x4	+	150/200/250	+
	20	Tr	18x8	+		
	20	Sg	18x100	-		
SLW-25120	30	Tr	24x5	+	150/200/250	+
SAW-0630	□5	Tr	8x1.5	+	60/100	+
	5	Sg	8x15	-		
SAW-1040	10	Tr	10x2	+	69/100/150	+
	10	Sg	10x12	-		10
	10	Sg	10x50	-		10
SAW-1080	10	Tr	12x3	+	100	+
	10	Sg	12x6	-		10
	10	Sg	12x25	-		10
SAW-1660	16	Tr	14x4	+	100/150/200	+
SLT-0412	5	Tr	8x1.5	+	38	+
	5	Sg	8x15	-		
SLT-0415	10	Tr	12x3	+	45	+
	10	Sg	12x6	-		10
	10	Sg	12x25	-		10
SLN-27	27	M	M5x0.8	+	35	+
	10	Sg	5x5	-		10
HTSP-01-06	6	M	M8x1.25	+	45	-
HTSP-01-10	10	Tr	6x2	+	36	-
HTSP-01-12 **HTSP-02-12**	12	Tr	10x2	+	55	-
SET-12	12	M	M4x0.7	+	45	-
SET-25	25	Tr	10x2	+	36	-
SET-30	30	Tr	12x3	+	55	-

* When configuring your linear module, we ask that you note the igus® specifications for maximum stroke lengths. The performance and load specifications shown above for all drive units are based exclusively on stroke lengths within the recommended values. Exceeding these can result in undesirable effects to the function such as increased wear and noise. The required performance and load specifications may not be achieved.

Max. stroke length [mm]	Max. stat. load axial [N]	Max. stat. load radial [N]	Max. speed [rpm]	Max. linear speed [m/min.]	Max. stroke length [mm]	Max. stat. axial [N]	Max. stat. radial [N]	Max. speed [rpm]	Max. linear speed [m/min.]	Technical options ZB = zero backlash PL = Preloaded TTF = Adjustable clearance
					300	100	400	1,000	2.0	ZB
					300	25	100	600	7.6	ZB
750	700	2,800	100	0.2	500	350	1,400	1500	3.0	PL
750	100	400	100	1.2	500	100	400	400	4.8	ZB
750	100	400	100	5.0	500	100	400	200	10.0	ZB
1,000	1,600	6,400	100	0.4	900	1,000	4,000	1,500	6.0	PL
1,000	500	2,000	100	0.8	900	500	2,000	1,000	8.0	PL
1,000	400	1600	100	10.0	900	400	1,600	200	20.0	-
1,250	2,500	10,000	100	0.5	1,000	1,500	6,000	1,200	6.0	PL
1,500	4,000	16,000	100	0.5	-	-	-	-	-	-
1,500	6,250	25,000	100	0.6	-	-	-	-	-	-
300	50	200	100	0.1						-
300	100	400	100	0.2	300	100	400	1,000	1.5	-
300	50	200	100	1.5	300	50	200	600	9.0	-
750	700	2,800	100	0.2	500	350	1,400	1,500	3.0	TTF/PL
750	100	400	100	1.2	500	100	400	400	4.8	TTF/PL
750	100	400	100	5.0	500	100	400	200	10.0	TTF/PL
750	1,200	4800	100	0.4	750	700	2,800	1,500	6.0	TTF/PL
1,000	1,600	6400	100	0.4	900	1,000	4,000	1,500	6.0	TTF/PL
1,000	500	2,000	100	0.8	900	500	2,000	1,000	8.0	TTF/PL
1,000	400	1,600	100	10.0	900	400	1600	200	20.0	TTF/PL
1,250	2,500	10,000	100	0.5	1,000	1,500	6,000	1,200	6.0	-
-	-	-	-	-	300	100	400	1,000	1.5	-
-	-	-	-	-	300	25	100	600	9.0	-
-	-	-	-	-	500	500	2,000	1,500	3.0	TTF/PL
-	-	-	-	-	500	100	400	400	4.8	TTF/PL
-	-	-	-	-	500	100	400	200	10.0	TTF/PL
-	-	-	-	-	750	750	3,000	1,500	4.5	TTF/PL
-	-	-	-	-	750	100	400	1,000	6.0	TTF/PL
-	-	-	-	-	750	100	400	300	7.5	TTF/PL
-	-	-	-	-	750	750	3,000	1,500	6.0	TTF/PL
-	-	-	-	-	300	100	400	1,000	1.5	-
-	-	-	-	-	300	25	100	600	9.0	-
-	-	-	-	-	600	200	800	1,500	4.5	-
-	-	-	-	-	600	100	400	750	4.5	-
-	-	-	-	-	600	50	200	300	7.5	-
250	10	40	100	0.1	250	10	40	250	0.2	-
250	10	40	100	0.5	250	10	40	500	2.5	-
300	50	200	100	0.1	-	-	-	-	-	-
350	100	400	100	0.2	-	-	-	-	-	-
500	200	800	100	0.2	-	-	-	-	-	-
200	10	40	100	0.1	-	-	-	-	-	-
750	150	600	100	0.2	-	-	-	-	-	-
850	200	800	100	0.3	-	-	-	-	-	-

** Linear modules with plain bearings require an aluminum shaft end support when connected to a motor
The technical values in the specifications are maximum values for each criteria, e.g. speed, stroke length etc.; they are not cumulative values. Suitability under consideration of the individual parameters for usage can be checked online at www.igus.com/drylin.

DryLin® Drive technology - Technical Data

Toothed belt drives

Belt drive	Shafts-Ø [mm]	Belt Material	Belt reinforcement	Tooth profile	Belt Tension [N]	Linear travel / per revolution	Length of carriage [mm]	DryLin® E motor compatible
ZLW-0630-B	☐ 5	Neoprene, black	GF	9 HTD 3M	75	54	60/100	+
ZLW-0630-S	☐ 5	Polyurethane, white	Steel	9 MTD 3 M	100	54	60/100	+
ZLW-1040-B	10	Neoprene, black	GF	15 RPP3	150	66	100/150/200	+
ZLW-1040-S	10	Polyurethane, white	Steel	16 AT 5	200	70	100/150/200	+
ZLW-1080-S	10	Polyurethane, white	Steel	16 AT 5	200	70	100/150/200	+
ZLW-1660-S	16	Polyurethane, white	Steel	32 AT 5	500	120	100/150/200/250	+
ZAW-1040-B	10	Neoprene, black	GF	15 RPP3	150	66	150	+
ZAW-1040-S	10	Polyurethane, white	Steel	16 AT 5	200	70	150	+
ZLW-OD-0630-B	☐ 5	Neoprene, black	GF	9 HTD 3M	75	54	60/100	+
ZLW-OD-0630-S	☐ 5	Polyurethane, white	Steel	9 MTD 3M	100	54	60/100	+
ZLW-OD-1040-B	10	Neoprene, black	GF	15 RPP3	150	66	100/150/200	+
ZLW-OD-1040-S	10	Polyurethane, white	Steel	16 AT 5	200	70	100/150/200	+

Tightening torque for drylin® connections between metal parts

Metric thread	Torque [Nm]	Recommended torque [Nm]
M4	1.0 - 2.8	1.5
M5	2.0 - 5.5	3.0
M6	4.0 - 10.0	6.0
M8	8.0 - 23.0	15.0
M10	22.0 - 46.0	30.0

Note the minimal screw in depth for aluminum and zinc parts: 1.5 x Da

DryLin® Drive technology - Technical Data

Max. stroke length* [mm]	Max. radial load [N]	Max. speed [m/s]	Max. position accuracy [mm]	Minimum torque with no payload [Nm]	Max. drive torque [Nm]
1,000	100	2.0	± 0.35	0.1	0.75
1,000	150	2.0	± 0.3	0.15	1.00
2,000	200	3.0	± 0.3	0.15	1.75
2,000	300	5.0	± 0.2	0.25	2.40
2,000	300	5.0	± 0.2	0.25	2.40
3,000	2,000	5.0	± 0.2	0.4	10.00
1,000	12 Nm	0.5	± 0.3	0.2	1.75
1,000	12 Nm	0.5	± 0.2	0.3	2.40
1,000	50	1.0	± 0.35	0.1	0.75
1,000	75	1.0	± 0.3	0.15	1.00
1,500	100	1.5	± 0.3	0.15	1.75
1,500	150	2.5	± 0.2	0.25	2.40

* When configuring your linear module, we ask that you note the igus® specifications for maximum stroke lengths. The performance and load specifications shown above for all drive units are based exclusively on stroke lengths within the recommended values. Exceeding these can result in undesirable effects to the function such as increased wear and noise. The required performance and load specifications may not be achieved.

DryLin® Drive technology - Technical options

In addition to the standard configurations, DryLin®-drives offer numerous solutions for the requirements of many different applications..

Adjustable radial clearance

The "turn to fit" feature allows individual clearance adjustment by hand. The adjustment is done in 0.01-mm increments (SLW type series 10-20).

For linear modules Types SLW and SAW

Clearance adjustment option Type HTS

Preload (PL)

The optional axial preload reduces the backlash of the system, so positioning and repeatability can be optimized. There is a slight increase in required drive force.

For linear modules Types HTS, SLW and SAW

Right-left/self-centering options

In addition to the standard right-handed lead screws, left-hand thread lead screws and combination left and right lead screws are also offered. This option often used in format adjustments.

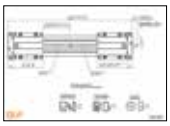

Linear modules with ball-bearing mounted lead screw

The HTS and SLW linear modules with ball bearing mounted leads crews give quiet operation, reduced vibration, and increased dynamic capability. These are required for applications with motor drives.

Zero-Backlash (ZB)

Self-adjusting zero-backlash lead screw nuts are available for HTS modules in size 08 and 12. For movements that require repeatability and use high helix thread, the ZB function provides a minimal lifelong backlash.

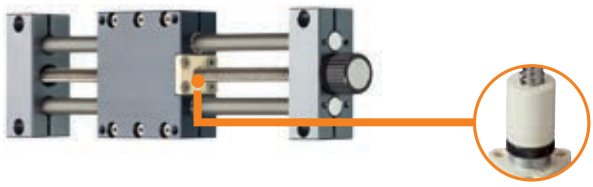

Fast Forward (FF)

HTS linear modules and HTSP plastic linear modules offer a combination of accurate positioning and fast manual adjustment with a quick-release nut.

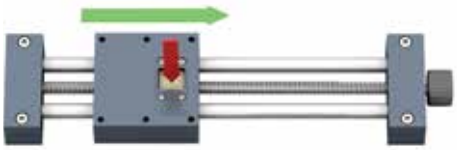

DryLin® SLW "Stop and Go"

This additional function for linear carriages enables the use of an unlimited number of carriages on one guide – controlled by only one lead screw. The connection to the lead screw is engaged or released via the button.vv

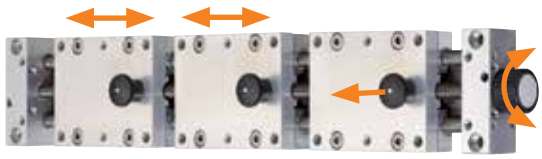

XY-Table

The HTS and SLW linear modules can also be configured as XY cross-slide tables. XY adjustments can therefore be given with a single unit.

DryLin® Drive technology - Technical options

Shaft materials

When using the HTS series, you can choose a ground shaft material made from steel, stainless steel, or hard-anodized aluminum (standard).

Lead screw materials

All DryLin® linear modules arfe offered with self-locking (non-back-driveable) trapezoidal steel and stainless steel lead screws, as well as hard-anodized aluminum. The HTS and SLW series can also be configured with high-helix stainless steel lead screws. This allows for much higher leads and drive speeds (without the self-locking feature).

Bearing materials

The bearing surfaces of the DryLin® drive units are equipped with self-lubricating and maintenance-free igus® high performance polymers. Options include materials for high temperature application up to 356°F (180°C) iglide® T500 (X)*, type HTX, and for FDA compliant environments, iglide® A180.

Complete solutions stainless steel

The use of 316 (1.4571) and 303 (1.4301) enables resistance to seawater and chemical-contact corrosion.

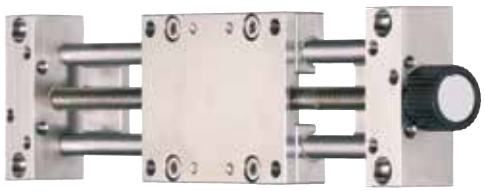

Linear modules with several carriages

All DryLin® linear modules can be configured with multiple carriages. The short carriages from the HTSC series are ideally suited for this. The second (or additional) carriage can be assembled with or without nut.

Linear modules with motor

Several DryLin® drive units are compatible with the DryLin® E motorized modular kit. DryLin® E offers pre-assembled linear stages with available stepper and DC motors, as well as proximity sensors and power and encoder cables.

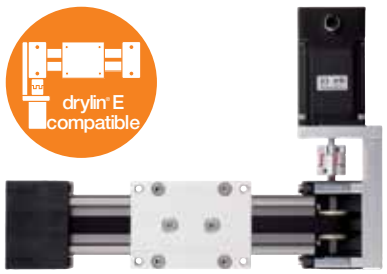

DryLin® Drive technology - Design and calculation

DryLin® linear lead screw units have been developed for position settings of all types. The linear setting is achieved by means of lead screw that can be operated manually or by low speed motor. The maximum linear continuous speed is 5.25 ft/min (1.6 m/min.) Use the graphs below to check suitability.

HORIZONTAL

HORIZONTAL

Maximum feed [m/min.]

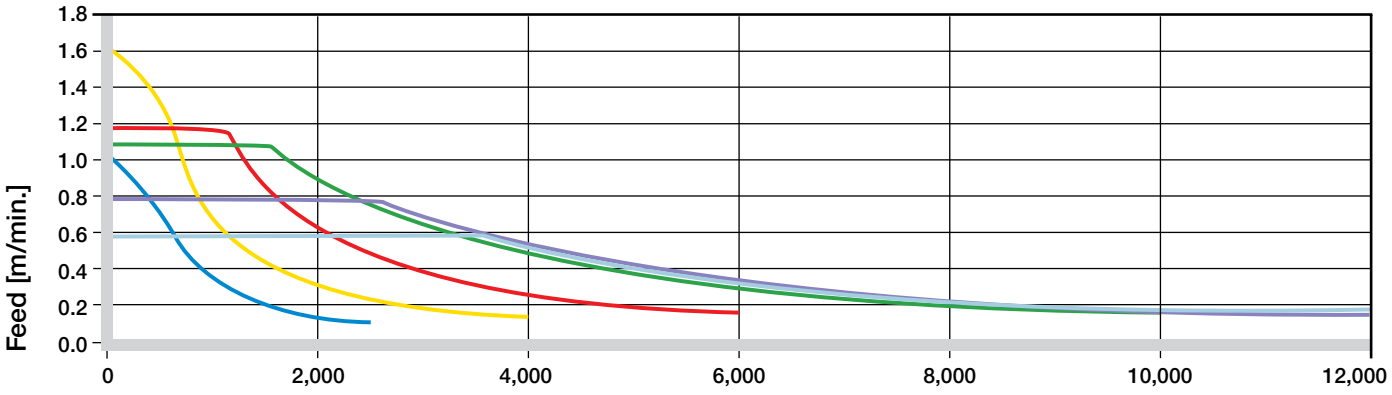

Centric loads in an horizontal installation position [N]

Max. rotation speed [rpm]

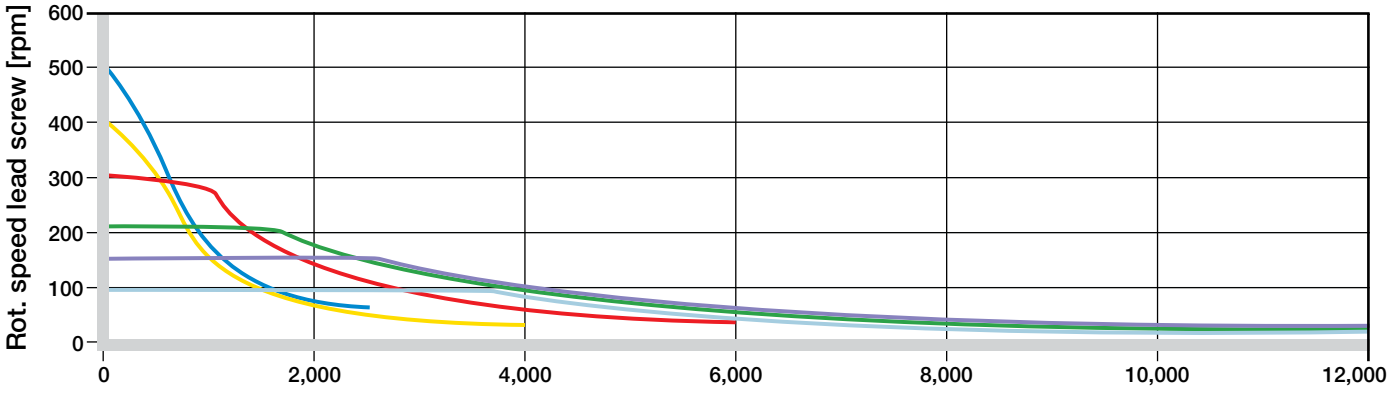

Centric loads in an horizontal installation position [N]

Max. drive torque [Nm]

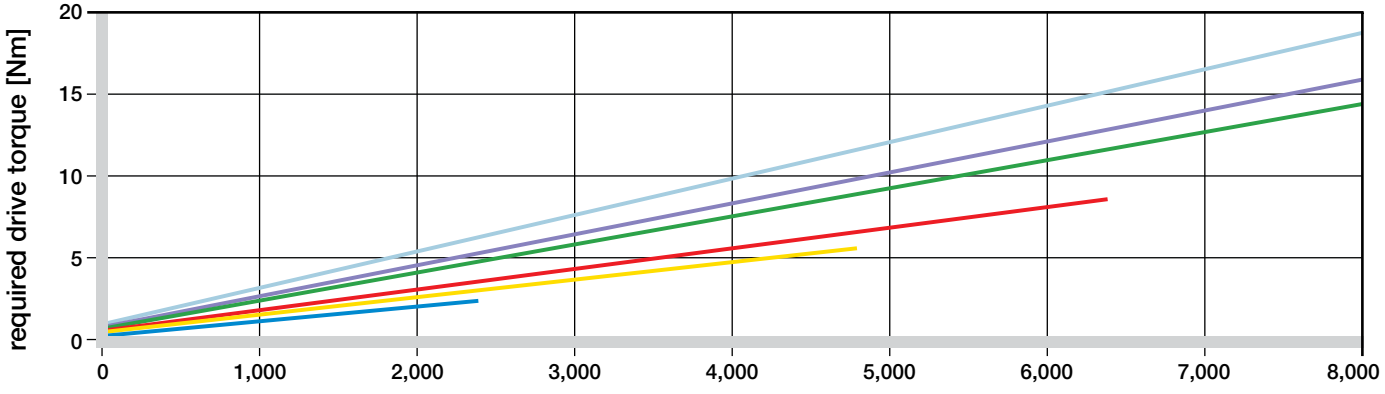

Centric loads in an horizontal installation position [N]

DryLin® Drive technology - Design and calculation

The following trapezoidal lead screw drive sizes are used in HTS, SLW and SET linear modules>

- TR 10x2: HTS-12, HTSC-12, HTSP-12, SLW-1040, SLW-1080, SLW-1040-ES, SET-25
- TR 14x4: SLW-1660
- TR 18x4: HTS-20, HTSC-20, SLW-2080
- TR 24x5: HTS-30, HTSC-30, SLW-25120
- TR 26x5: HTSC-40
- TR 30x6: HTSC-50

VERTICAL

Maximum feed [m/min.]

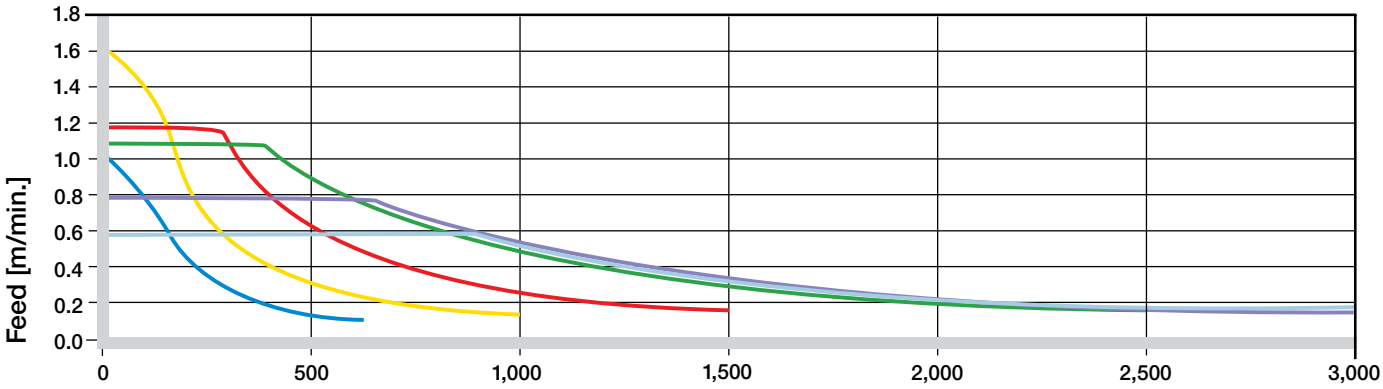

Max. rotation speed [rpm]

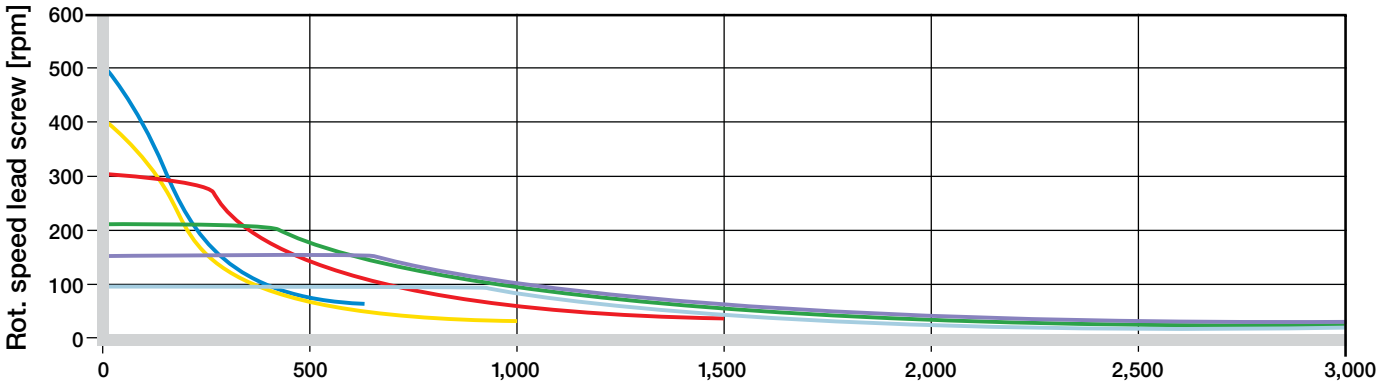

Max. drive torque [Nm]

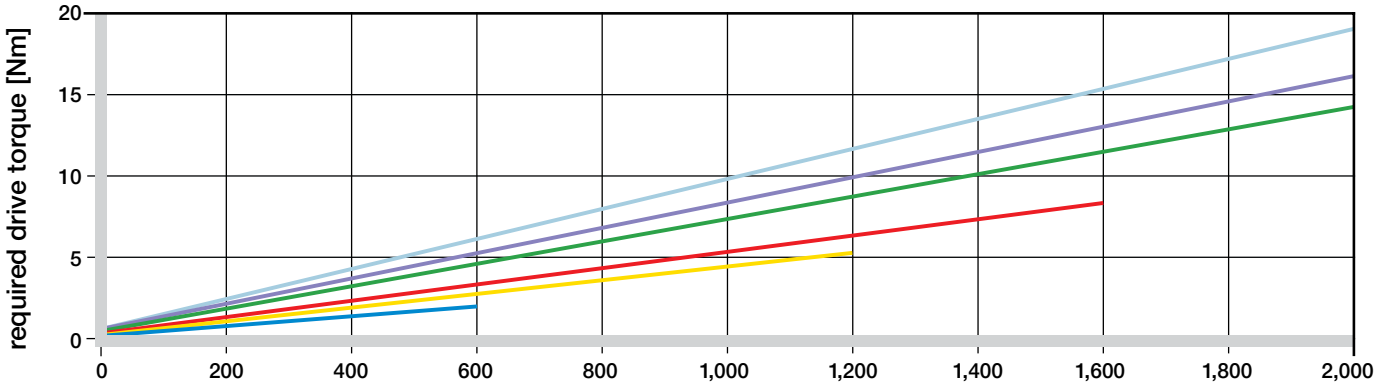

DryLin® Drive technology - Design and calculation

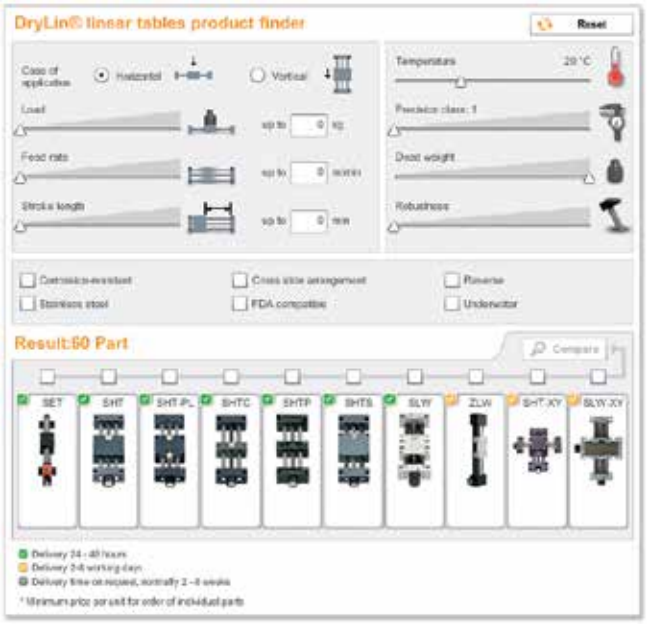

Complete drive technology configurable, including motors

The product finder for DryLin® drive technology now allows engineers to choose and calculate corresponding motors and liner stages. Parts and lifetime can be calculated, configured and ordered, all with the same tool.

- Your individual solution, with motor option
- Configure and order optional accessories
- Calculate motor load
- Easy-to use display of results to find the best solution
- Easy access to further functions like online catalog, shopping-basket, downloads, etc.

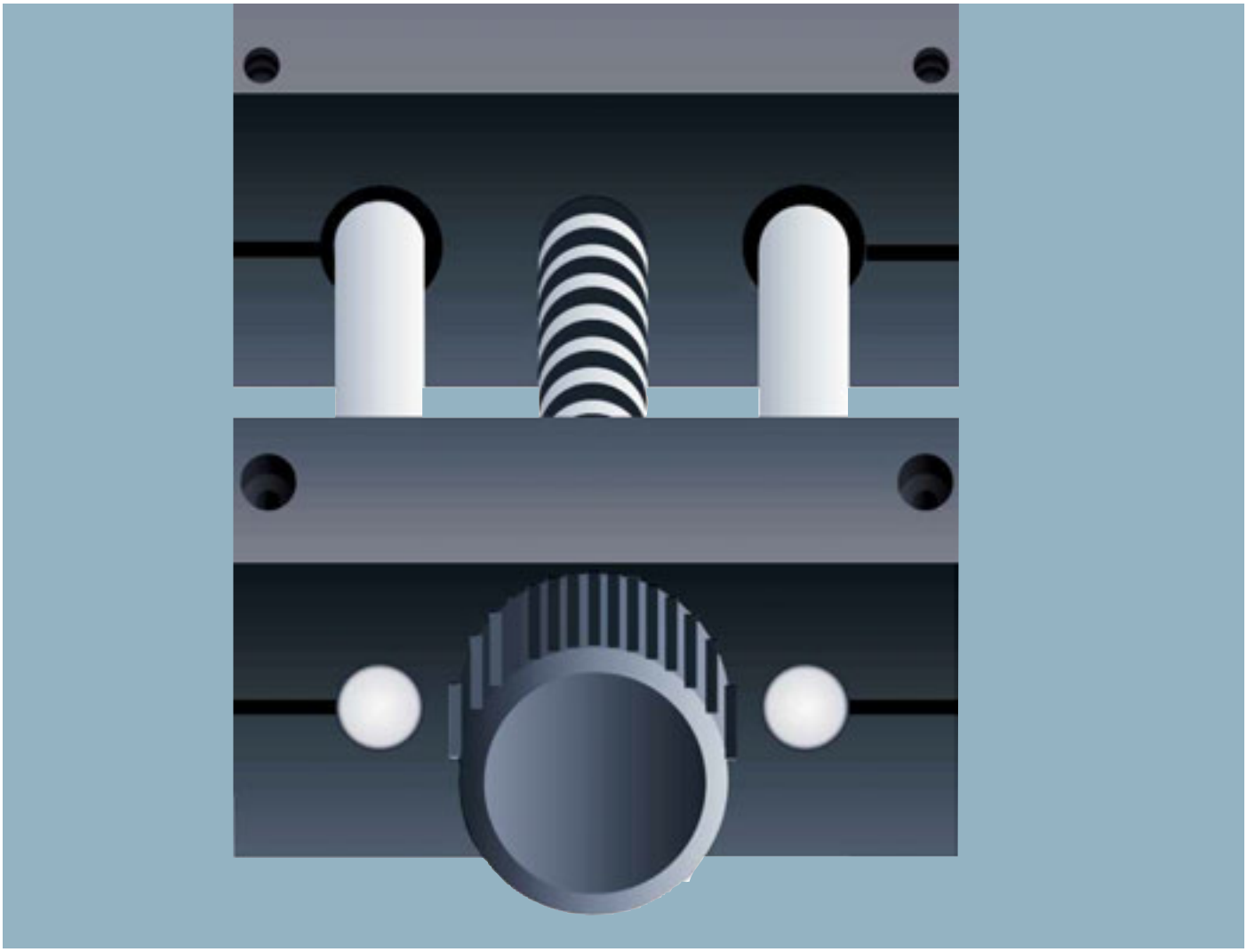

DryLin General Drive Technology Linear Modules HTS

- 100% self-lubricating
- Trapezoidal or high-helix lead screw drives
- Ball-bearing lead screw units available for higher dynamic speeds
- Carriage in either long or compact design

DryLin® HTS - Advantages

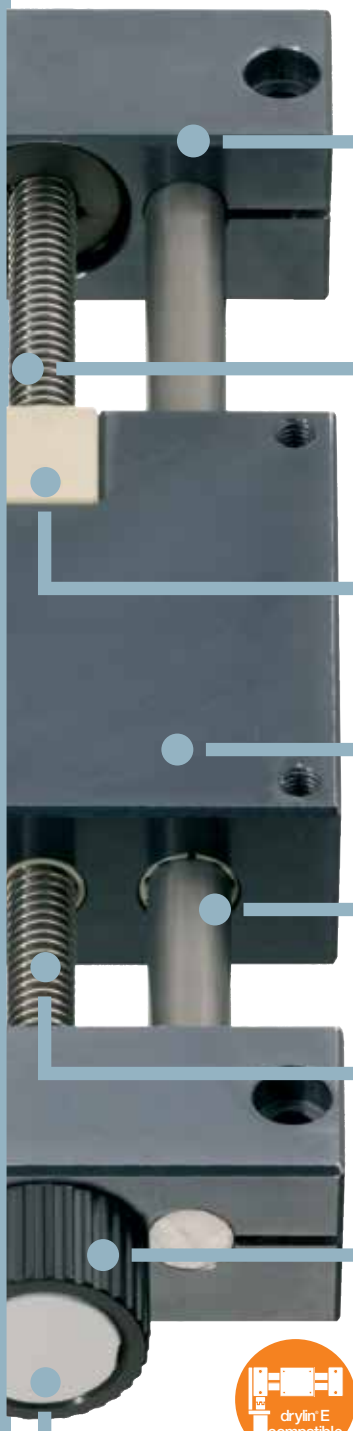

Basic parts (shaft end supports/ carriages) are made from machined aluminum with anodized surfaces

Drive: self-locking (non back-driveable) trapezoidal thread or fast high helix thread

Bearing elements/ nut made from self-lubricating iglide® plastics

Carriages in long or short “compact” design

Precision ground shaft material

Lead screw material: steel or stainless steel

For manual adjustments, large range of accessories available
➤ **Page 1293**

Also available with motor as a ready to install linear drive (DryLin® E ➤ **Page 1317**)

Linear modules - DryLin® HTS

The DryLin® HTS linear modules are self-lubricating, while also offering precision and robust components. The units can be configured with various shaft and lead screw materials, carriage lengths and additional accessories. The HTS series is suitable for manual and motorized operation and is supplied ready for connection with DryLin® E-motors.

- All sliding surfaces are completely self-lubricating using iglide® high performance plastics
- Freely selectable stroke lengths
- High temperature version available
- HTS linear modules can be configured as a multi-carriage system and/or with right/left self-centering travel

Typical application areas

- Format adjustment
- Packaging machinery
- Sensor adjustment
- Marking and engraving technology
- Laboratory equipment

Online product finder

Carriage lengths: 30-180 mm
Pitch: 2-100 mm/rotation
Rail length: up to 1,500 mm

Detailed technical data
➤ **www.igus.com/drylin-drivetechnology**

Available in 3-8 days
Detailed information about delivery time online.

DryLin® HTS - Product overview

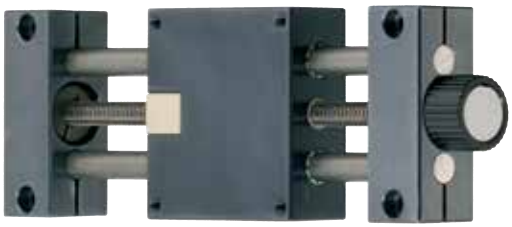

Linear module HTS – Standard

- Machined and anodized blocks
- Multiple sizes
- Various materials for shaft and lead screw
- Maintenance-free and corrosion-resistant

➤ **Page 1248**

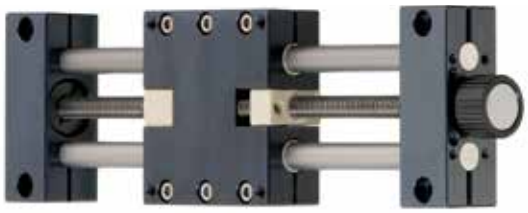

Linear module HTS-PL "preload"

- Uses preloaded trapezoidal lead screw nuts, preload force: 50 N for axial precision
- Adjustable radial clearance
- Low weight

➤ **Page 1249**

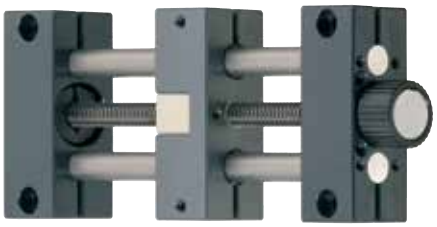

Linear module HTSC – Compact

- High flexibility due to short carriages
- Ideal for 2 carriage system
- Maintenance-free, dry operation

➤ **Page 1250**

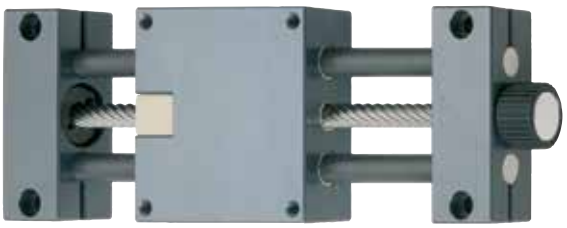

Linear module HTSS – Rapid traverse

- High-Speed-solution for fast positioning
- High helix lead screw
- Maintenance-free, dry operation
- Up to 100 mm travel/rotation

➤ **Page 1251**

Linear module HTS-BB "ball-bearing" version

- Higher rotation speed and higher precision for motors
- still uses plain linear bearings
- Constant drive torque
- Less axial clearance

➤ **Page 1252**

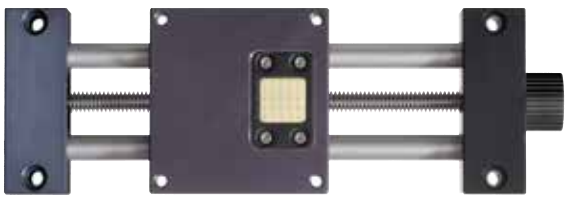

Linear module HTS-FF "Fast-Forward"

- With quick-release mechanism
- Precise and fast positioning
- Self-locking/Non-back-driveable
- Only recommended for horizontal applications

➤ **Page 1254**

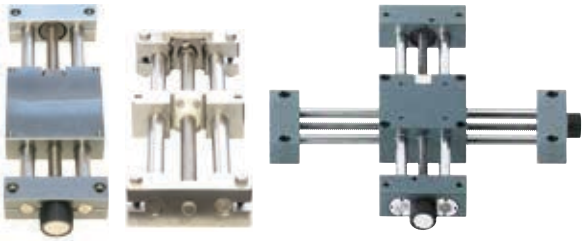

Linear module special designs

- HTS-HTX: for temperatures up to 356°F (+180°C)
- HTSC-HYD: hygienic design, light, for washdown applications
- HTS-XY: cross slides standard and preload

➤ **From page 1256**

DryLin® HTS - Product range - Trapezoidal/high-helix thread

HTS - Standard - Machined blocks and precision shafting

- Solid design
- 3 different sizes
- Various materials for shaft and lead screw
- Maintenance free and optionally corrosion resistant
- TR10x2, TR18x4, TR24x5 lead screws
- Temperature resistant up to 176°F (+80°C)
- Available accessories ➤ **Page 1293**
- Lead screw nuts are available separately ➤ **Page 1214**

drylin E compatible

Available as a motorized version DryLin® E ➤ **Page 1317**

reddot design award winner 2006

Order key complete ➤ Page 1259

HTS-12-AWM

Shaft material
Installation size
Standard

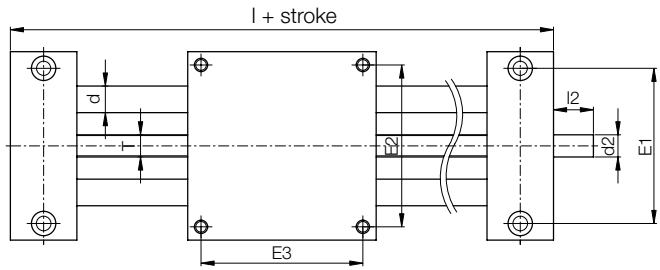

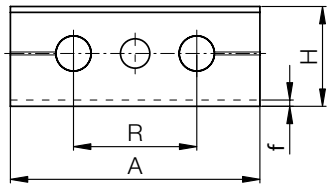

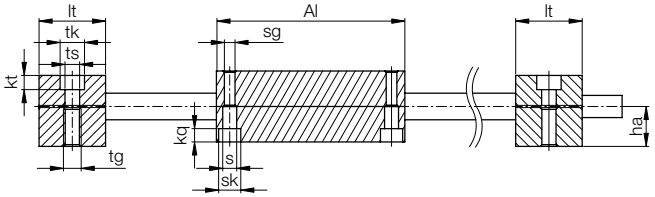

Technical data

Part No.	Max. stroke length	Aluminum shaft		Steel shaft		Max. static load capacity	
		Weight	Additional (per 100 mm)	Weight	Additional (per 100 mm)	axial	radial
	[mm]	[kg]	[kg]	[kg]	[kg]	[N]	[N]
HTS-12-AWM	750	1.1	0.1	1.3	0.2	700	2,800
HTS-20-AWM	1,000	3.2	0.3	3.9	0.6	1,600	6,400
HTS-30-AWM	1,250	8.6	0.6	10.9	1.4	2,500	10,000

Dimensions [mm]

Part No.	A	Al	H	E1	E2	E3	l	R	f	lt	tk	ts
	–0.3	–0.3		±0.15	±0.15	±0.15				±0.1		
HTS-12-AWM	85	85	34	70	73	73	145	42	2	30	11	6.6
HTS-20-AWM	130	130	48	108	115	115	202	72	2	36	15	9.0
HTS-30-AWM	180	180	68	150	158	158	280	96	4	50	20	13.5

Part No.	tg	kt	s	sk	sg	kq	d	T	l2	d2	ha
		±0.1								Standard	
HTS-12-AWM	M8	6.4	6.3	10	M6	6.0	12	Tr10x2	17	Tr10x2[92)]	18
HTS-20-AWM	M10	8.6	6.4	11	M8	7.0	20	Tr18x4	26	12h9	23
HTS-30-AWM	M16	12.6	11.0	18	M12	10.6	30	Tr24x5	38	14h9	36

92) Lead screw end unmachined

DryLin® HTS - Product range - Trapezoidal/high-helix thread

HTS-PL - Preload - For increased axial clearance

Preloaded trapezoidal lead screw nut
Radial clearance adjustable from both sides

drylin® E compatible

Available as a motorized version
DryLin® E ➤ **Page 1317**

Order key
complete ➤ Page 1259

HTS-12-AWM-PL

Preload
Shaft material
Installation size
Standard

- Preloaded trapezoidal lead screw nuts, preload force: 50 N
- Adjustable radial clearance
- Low weight
- Temperature resistant up to 176°F (+80°C)
- Available accessories ➤ **Page 1293**
- Lead screw nuts are available separately ➤ **Page 1214**

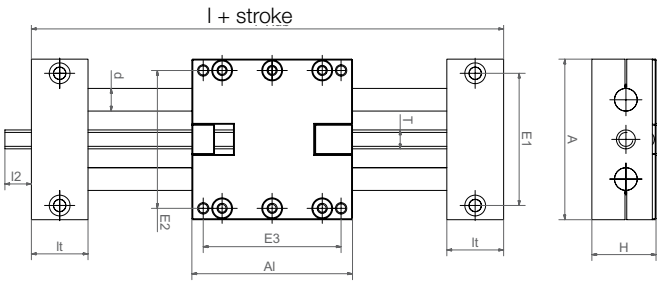

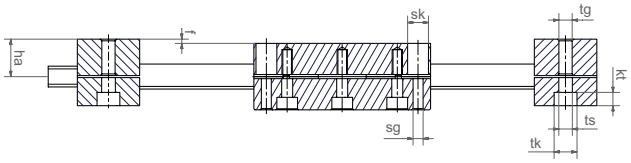

Technical data

Part No.	Max. stroke length	Aluminum shaft		Steel shaft		Max. static load capacity	
		Weight	Additional (per 100 mm)	Weight	Additional (per 100 mm)	axial	radial
	[mm]	[kg]	[kg]	[kg]	[kg]	[N]	[N]
HTS-12-AWM-PL	750	1.1	0.1	1.3	0.2	700	2,800
HTS-20-AWM-PL	1,000	3.2	0.3	3.9	0.6	1,600	6,400
HTS-30-AWM-PL	1,250	8.6	0.6	10.9	1.4	2,500	10,000

Dimensions [mm]

Part No.	A	Al	H	E1	E2	E3	l	R	f	lt	tk	ts
	–0.3	–0.3		±0.15	±0.15	±0.15				±0.1		
HTS-12-AWM-PL	85	85	34	70	73	73	145	42	2	30	11	6.6
HTS-20-AWM-PL	130	130	48	108	115	115	202	72	2	36	15	9.0
HTS-30-AWM-PL	180	180	68	150	158	158	280	96	4	50	20	13.5

Part No.	tg	kt	sk	sg	d	T	l2	d2	ha
		±0.1						Standard	
HTS-12-AWM-PL	M8	6.4	10	M6	12	Tr10x2	17	Tr10x2[92)]	18
HTS-20-AWM-PL	M10	8.6	11	M8	20	Tr18x4	26	12h9	23
HTS-30-AWM-PL	M16	12.6	18	M12	30	Tr24x5	38	14h9	36

92) Lead screw end unmachined

DryLin® HTS - Product range - Trapezoidal/high-helix thread

HTSC - Compact with short carriage

- Compact, short carriage
- Ideal for 2 carriages
- Maintenance free, dry operation
- Adjustable radial clearance
- Available accessories ➤ **Page 1293**
- Lead screw nuts are available separately ➤ **Page 1214**

Order key
complete ➤ Page 1259

HTSC-12-AWM

- Shaft material
- Installation size
- Type: flexible

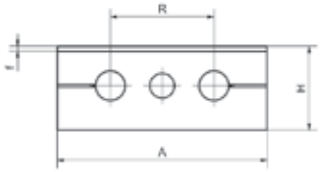

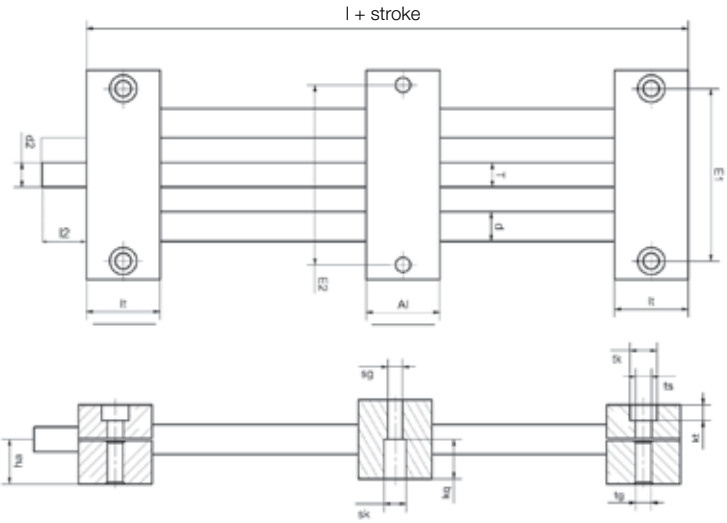

drylin® E compatible

Available as a motorized version
DryLin® E ➤ **Page 1317**

Technical data

Part No.	Max. stroke length	Aluminum shaft		Steel shaft		Max. static load capacity	
		Weight	Additional (per 100 mm)	Weight	Additional (per 100 mm)	axial	radial
	[mm]	[kg]	[kg]	[kg]	[kg]	[N]	[N]
HTSC-12-AWM	750	0.7	0.1	0.8	0.2	700	2,800
HTSC-20-AWM	1,000	1.9	0.3	2.3	0.6	1,600	6,400
HTSC-30-AWM	1,250	4.6	0.6	5.8	1.4	2,500	10,000
HTSC-40-AWM	1,500	11.0	0.9	16.0	2.4	4,000	16,000
HTSC-50-AWM	1,500	17.0	1.2	26.3	3.5	6,250	25,000

Dimensions [mm]

Part No.	A	Al	H	E1	E2	l	R	f	lt	tk	ts	tg
	–0.3	–0.3		±0.15	±0.15				±0.1			
HTSC-12-AWM	85	30	34	70	73	90	42	2	30	11	6.6	M8
HTSC-20-AWM	130	36	48	108	115	108	72	2	36	15	9.0	M10
HTSC-30-AWM	180	50	68	150	158	150	96	4	50	20	13.5	M16
HTSC-40-AWM	230	70	84	202	202	210	122	4	70	20	13.5	M16
HTSC-50-AWM	280	80	100	250	250	240	152	4	80	20	13.5	M16

Part No.	kt	sk	sg	kq	d	T	l2	d2	ha
	±0.1							Standard	
HTSC-12-AWM	6.4	10	M6	6.0	12	Tr10x2	17	Tr10x2[92)]	18
HTSC-20-AWM	8.6	11	M8	7.0	20	Tr18x4	26	12h9	23
HTSC-30-AWM	12.6	18	M12	10.6	30	Tr24x5	38	14h9	36
HTSC-40-AWM	12.6	20	M16	39	40	Tr26x5	45	16h9	44
HTSC-50-AWM	12.6	20	M16	49	50	Tr30x6	50	20h9	52

[92)] **Lead screw end unmachined**

DryLin® HTS - Product range - Trapezoidal/high-helix thread

HTSS - fast, high-helix lead screw system

- Diameter x lead
  10 x 12, 10 x 25, 10 x 50, 18 x 100
- High helix lead screw
- High-speed-solution
- Maintenance free, dry operation
- Available accessories ➤ **Page 1293**
- Lead screw nuts are available separately
  ➤ **Page 1214**

Order key
complete ➤ Page 1259

HTSS-12-AWM-10x12

- Pitch
- Shaft material
- Dimension
- High helix thread
- Standard

reddot design award
winner 2006

drylin E compatible

Available as a motorized version
DryLin® E ➤ **Page 1317**

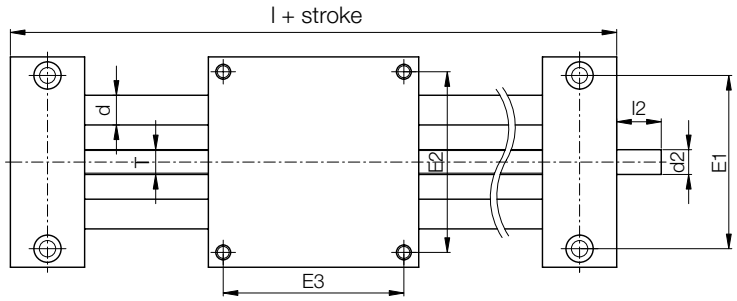

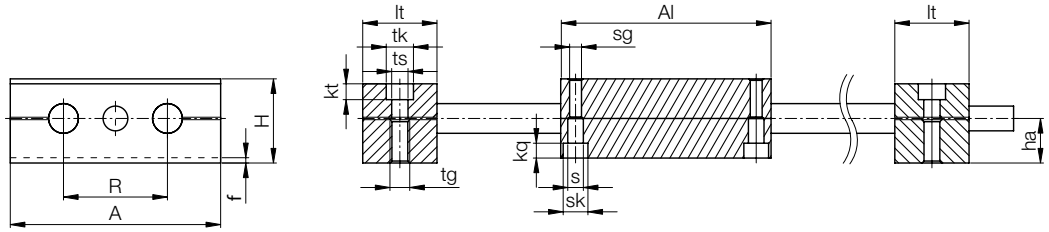

Technical data and dimensions [mm]

Part No.	Max. stroke length	Aluminum shaft		Max. static load capacity	
		Weight	Additional (per 100 mm)	axial	radial
	[mm]	[kg]	[kg]	[N]	[N]
HTSS-12-AWM-10x12	750	1.1	0.1	100	400
HTSS-12-AWM-10x50	750	1.1	0.1	100	400
HTSS-20-AWM-18x100	1,000	3.2	0.3	400	1,600

Part No.	A	Al	H	E1	E2	E3	l	R	f	lt	tk	ts	tg
				±0.15	±0.15	±0.15				±0.1			
HTSS-12-AWM-10x12	85	85	34	70	73	73	145	42	2	30	11	6.6	M8
HTSS-12-AWM-10x50	85	85	34	70	73	73	145	42	2	30	11	6.6	M8
HTSS-20-AWM-18x100	130	130	48	108	115	115	202	72	2	36	15	9.0	M10

Part No.	kt	s	sk	sg	kq	d	T	l2	d2	ha
	±0.1								Standard	
HTSS-12-AWM-10x12	6.4	6.3	10	M6	6.0	12	10x12	17	Tr10x12[92)]	18
HTSS-12-AWM-10x50	6.4	6.3	10	M6	6.0	12	10x50	17	Tr10x50[92)]	18
HTSS-20-AWM-18x100	8.6	6.4	11	M8	7.0	20	18x100	26	12h9	23

[92)] Lead screw end unmachined

DryLin® HTS - Product range

HTS-BB – Linear modules with ball-bearing lead screw supports

- For motorized applications
- Higher precision
- Less axial clearance
- Constant drive torque
- Zero-backlash function available for sizes 08 and 12
- Available accessories ➤ **Page 1293**
- Lead screw nuts are available separately ➤ **Page 1214**

drylin E compatible

Available as a motorized version DryLin® E ➤ **Page 1317**

Order key complete ➤ **Page 1259**

HTS-BB-12-AWM

- Shaft material
- Installation size
- Ball bearing
- Standard

Order key complete ➤ **Page 1259**

HTS-08-ZB-AWM

- Shaft material
- Ball bearing, zero-backlash
- Installation size
- Standard

Technical data

Part No.	Max. stroke length	Aluminum shaft		Steel shaft		Max. static load bearing capacity	
		Weight	Additional (per 100 mm)	Weight	Additional (per 100 mm)	axial	radial
	[mm]	[kg]	[kg]	[kg]	[kg]	[N]	[N]
HTSC-08-ZB	300	0.240	0.05	0.270	0.094	100	360
HTS-08-ZB-AWM-6X2P1	300	0.205	0.05	0.228	0.103	100	400
HTS-08-ZB-AWM-6.35x12.7	300	0.205	0.05	0.228	0.103	100	400
HTS-12-ZB-AWM-10x12	500	1.1	0.1	1.3	0.2	150	600
HTS-BB-12-AWM	500	1.1	0.1	1.3	0.2	350	1,400
HTS-BB-20-AWM	900	3.2	0.3	3.9	0.6	1,000	4,000
HTS-BB-30-AWM	1,000	8.6	0.6	10.9	1.4	1,500	6,000

DryLin® HTS - Product range

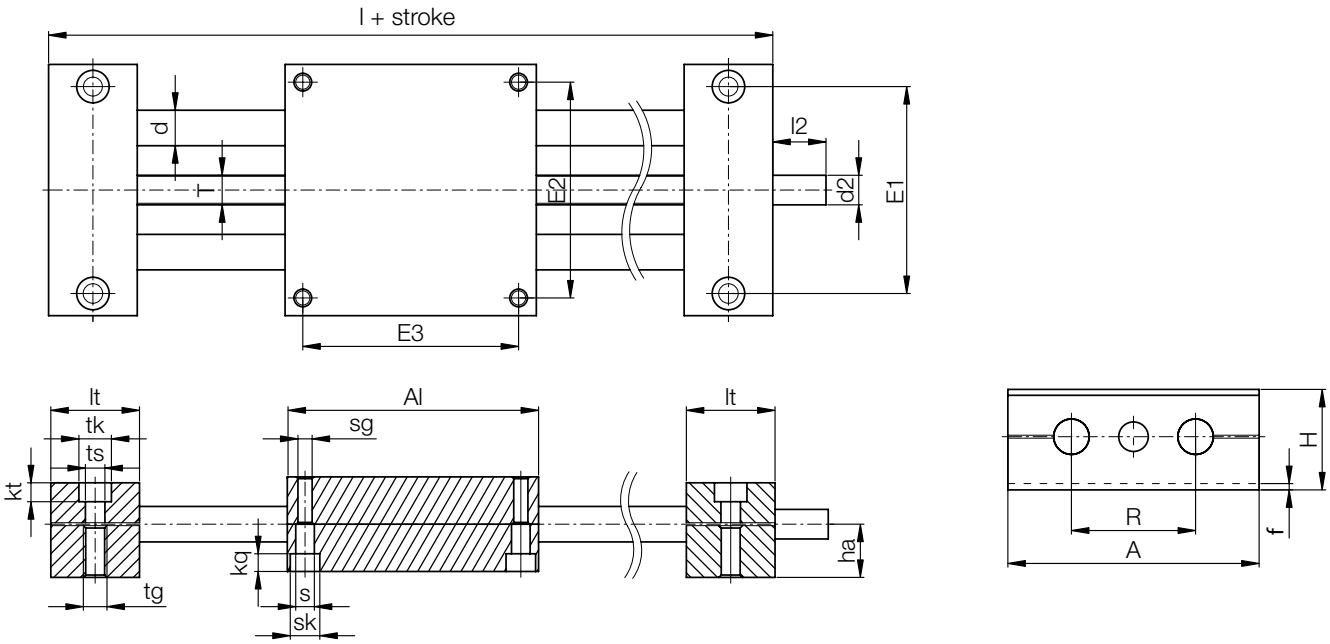

Dimensions [mm]

Part No.	A	Al	H	E1	E2	E3	l	R	f	lt	tk	ts
	–0.3	–0.3		±0.15	±0.15	±0.15				±0.1		
HTSC-08-ZB	65	36	23	52	55	26	96	32	1.5	15.5	10	5.5
HTS-08-ZB-AWM-6X2P1	65	65	23	52	55	55	96	32	1.5	15.5	10	5.5
HTS-08-ZB-AWM-6.35x12.7	65	65	23	52	55	55	96	32	1.5	15.5	10	5.5
HTS-12-ZB-AWM-10x12	85	85	34	70	73	73	145	42	2	30	11	6.6
HTS-BB-12-AWM	85	85	34	70	73	73	145	42	2	30	11	6.6
HTS-BB-20-AWM	130	130	48	108	115	115	202	72	2	36	15	9.0
HTS-BB-30-AWM	180	180	68	150	158	158	280	96	4	50	20	13.5

Part No.	tg	kt	s	sk	sg	kq	d	T	l2	d2	ha
		±0.1								Standard	
HTSC-08-ZB	M6	7	4.2	8	M5	4.6	8	6 / 6.35	17	6 / 6.35	13
HTS-08-ZB-AWM-6X2P1	M6	7	4.2	8	M5	4.6	8	Tr6x2	17	Tr6x2[92)]	13
HTS-08-ZB-AWM-6.35x12.7	M6	7	4.2	8	M5	4.6	8	6.35x12.7	17	6.35[92)]	13
HTS-12-ZB-AWM-10x12	M8	6.4	6.3	10	M6	6.0	12	10x12	17	10x12[92)]	18
HTS-BB-12-AWM	M8	6.4	6.3	10	M6	6.0	12	Tr10x2	17	Tr10x2[92)]	18
HTS-BB-20-AWM	M10	8.6	6.4	11	M8	7.0	20	Tr18x4	26	12h9	23
HTS-BB-30-AWM	M16	12.6	11.0	18	M12	10.6	30	Tr24x5	38	14h9	36

[92)] Lead screw end unmachined

DryLin® HTS - Product range

HTSC-FF – Compact, Fast Forward

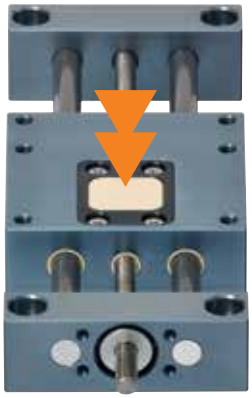

The ultra-compact HTS-08 linear module is now also available with the "Fast-Forward" quick release mechanism.

- Precise aluminum version
- Variable stroke length
- Multi-carriage solutions
- Available accessories (hand wheel, etc)
- Recommended only for horizontal applications

drylin® E compatible

Available as a motorized version
DryLin® E ➤ **Page 1317**

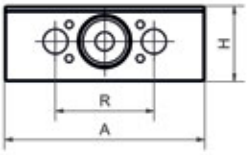

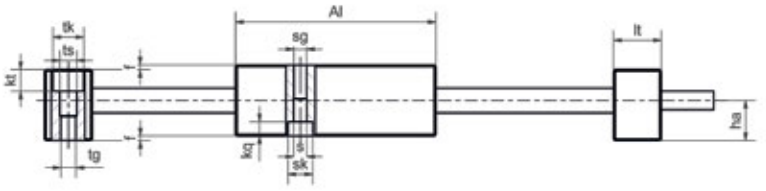

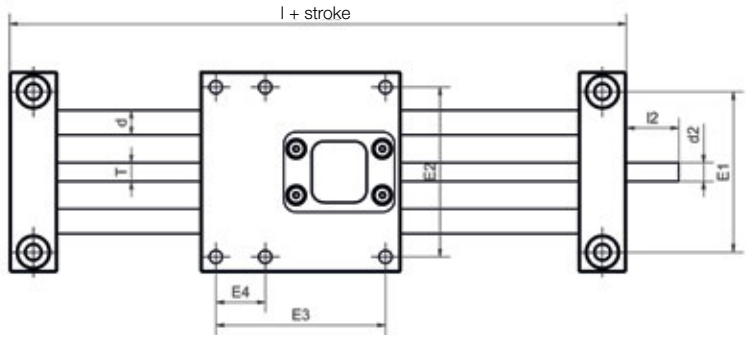

Technical data and dimensions [mm]

Part No.	Max. stroke length	Aluminum shaft		Steel shaft		Max. static load capacity
		Weight	Additional (per 100 mm)	Weight	Additional (per 100 mm)	radial
	[mm]	[kg]	[kg]	[kg]	[kg]	[N]
HTSC-08-AWM-FF	300	0.35	0.04	0.4	0.06	100

Part No.	A	Al	H	E1	E2	E3	E4	l	R	lt ±0.1	l2	d2
HTSC-08-AWM-FF	65	65	23	52	55	55	16	96	32	15.5	17	6

Part No.	f	tk ±0.1	ts	tg	kt	s	sk	sg	kg	d Standard	T	ha
HTSC-08-AWM-FF	1.5	10	5.5	M6	7	4.2	8	M5	4.6	8	6	13

DryLin® HTS - Product range

HTS-FF – Fast Forward

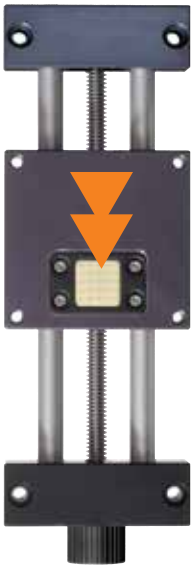

HTS linear tables with quick release mechanism offer a combination of accurate positioning and fast manual adjustment.

- For fast format adjustments
- Non-back-driveable
- Variable stroke length
- Only recommended for horizontal applications
- Maximum static axial load 200 N (horizontal mounting position)
- Maximum dynamic axial load 50 N
- Available accessories
  ➤ Page 1293

Order key complete ➤ Page 1259

HTS-12-AWM-FF

Fast Forward
Shaft material
Installation size
Standard

drylin E compatible

Available as a motorized version DryLin® E ➤ Page 1317

product design award 2011

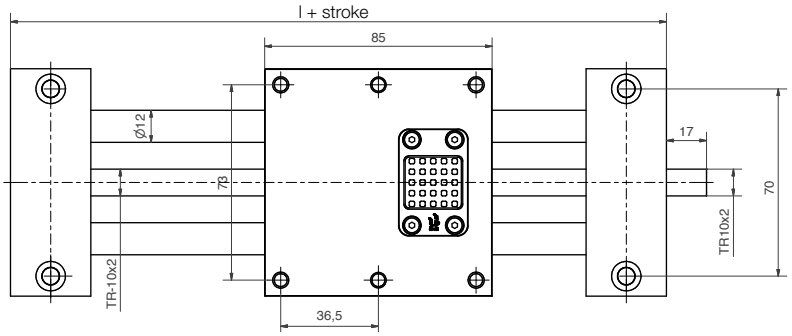

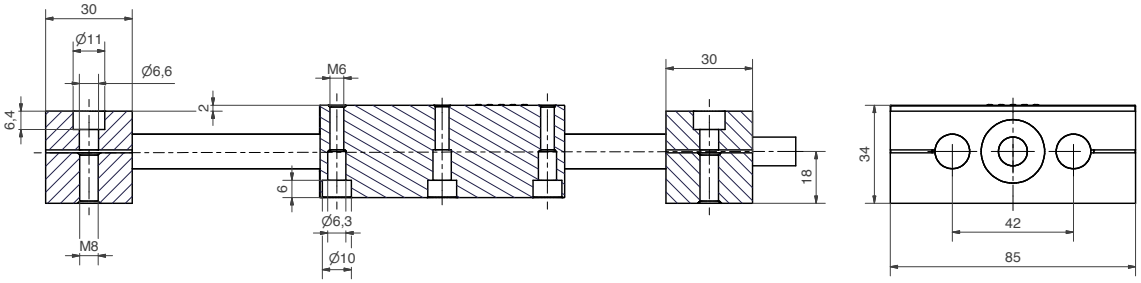

Technical data

Part No.	Max. stroke length [mm]	Weight [kg]	Additional weight per 100 mm
HTS-12-AWM-FF	750	1.1	0.1

1.

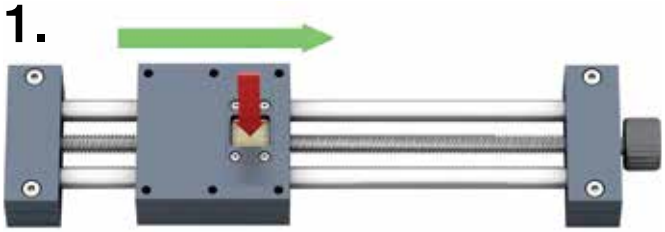

2.

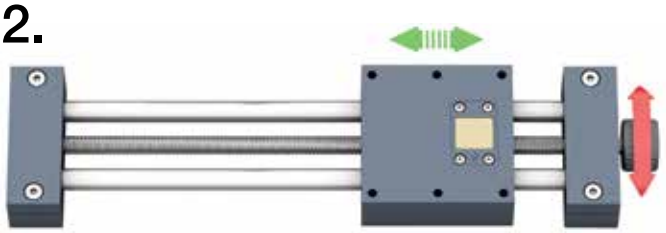

press > disengage > move manually > click into place > fine-tuning

DryLin® HTS - Product range

HTS-HTX – For high temperatures up to +356°F (+180°C)

- Shafts and lead screw made from stainless steel, bearings and nut iglide® T500 (X)*
- Carriages and shaft ends made from anodized aluminum
- Self-lubricating
- Also available with compact carriages and X-Y configuration
- Available accessories
  ➤ Page 1293

Order key complete ➤ Page 1259

HTS-20-EWM-HTX

- High temperature
- Shaft material
- Dimension
- Standard

drylin® E compatible

Available as a motorized version DryLin® E ➤ Page 1317

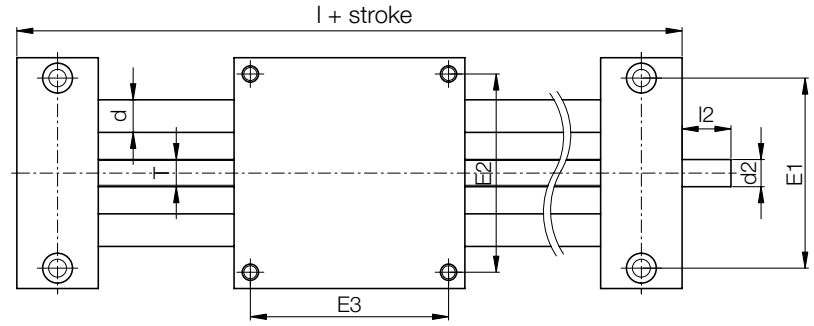

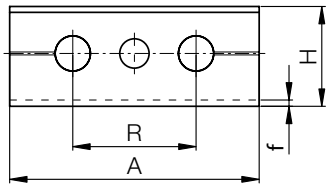

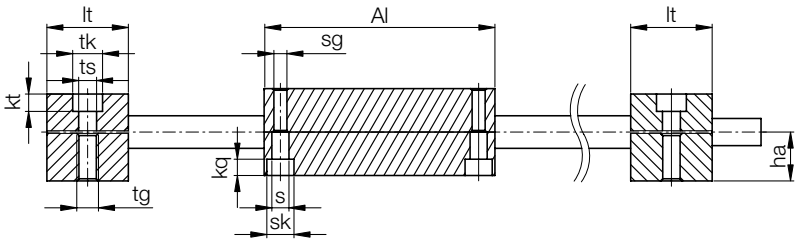

Technical data

Part No.	Max. stroke length	Steel shaft		Max. static load capacity	
		Weight	Additional (per 100 mm)	axial	radial
	[mm]	[kg]	[kg]	[N]	[N]
HTS-12-EWM-HTX	750	1.3	0.2	700	2,800
HTS-20-EWM-HTX	1,000	3.9	0.6	1,600	6,400

Dimensions [mm]

Part No.	A	Al	H	E1	E2	E3	l	R	f	lt	tk	ts
	–0.3	–0.3		±0.15	±0.15	±0.15				±0.1		
HTS-12-EWM-HTX	85	85	34	70	73	73	145	42	2	30	11	6.6
HTS-20-EWM-HTX	130	130	48	108	115	115	202	72	2	36	15	9.0

Part No.	tg	kt	s	sk	sg	kq	d	T	l2	d2	ha
		±0.1								Standard	
HTS-12-EWM-HTX	M8	6.4	6.3	10	M6	6.0	12	Tr10x2	17	Tr10x2[92)]	18
HTS-20-EWM-HTX	M10	8.6	6.4	11	M8	7.0	20	Tr18x4	26	12 h9	23

[92)] Lead screw end unmachined

*X is the European equivalent material for iglide® T500

DryLin® HTS - Product range

HTSC-HYD – hygienic design

DryLin® STAINLESS STEEL

Order key
complete ➤ Page 1259

HTSC-20-EWM-HYD

- Hygienic design
- Shaft material
- Dimension
- Type: flexible

Based on the "hygienic design" idea, this version offers an easily cleaned solution for washdowns. The screw connections are raised with no counterbores and gaps are intentionally wide for easy cleaning. The materials used are plastic and 300 series (VA) stainless steel.

drylin E compatible

Available as a motorized version
DryLin® E ➤ **Page 1317**

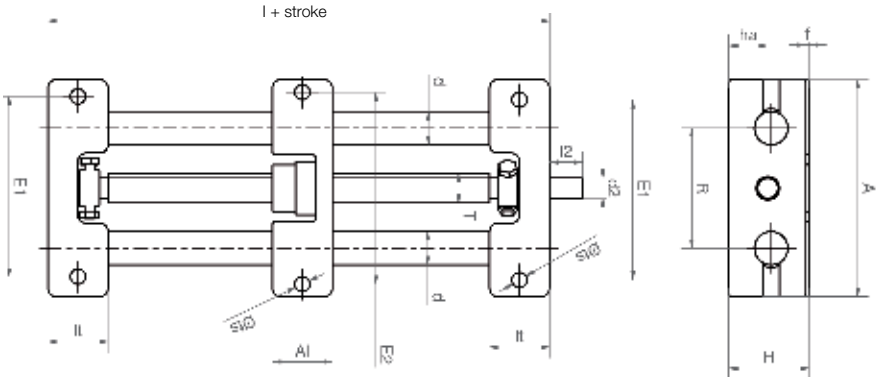

FDA

The lead screw unit can be supplied completely with FDA-compliant materials.

Dimensions [mm]

Part No.	A	Al	H	E1	E2	l	R	f	lt	ts	d	T	l2	d2	ha
	–0.3	–0.3		±0.15	±0.15										
HTSC-20-EWM-HYD	130	35	48	108	115	108	72	2	36	9.0	20	Tr18x4	26	12 h9	23

Available accessories ➤ Page 1293

HTSC-HYD can be assembled using the following bearing materials:

iglide® J
Standard up to +194°F (+90°C)

iglide® T500 *(X)
For temperatures up to +482°F (+250°C) and high chemical resistance

iglide® A180
For applications with food contact (FDA compliant)

DryLin® HTS - Product range

HTS – XY-table Standard/Preload

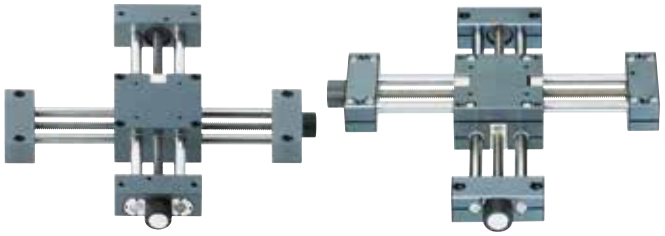

DryLin® HTS DryLin® HTS-PL

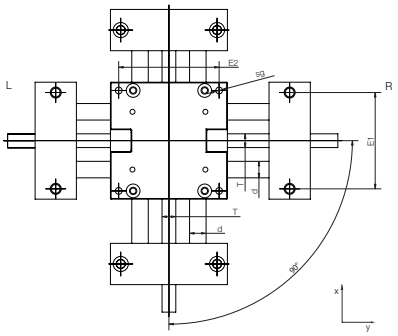

- High precision, machined and accurate alignment with the single carriage
- Available as standard or preload version
- Self-lubricating and corrosion-resistant
- Adjustable radial clearance on the preloaded (PL) version
- Available accessories ➤ **Page 1293**

drylin E compatible

Available as a motorized version
DryLin® E ➤ **Page 1317**

Order key
complete ➤ Page 1260

HTS-XY-12-AWM-PL-R

- R: y-unit right adjustment
- L: y-unit left adjustment
- Preload (optional)
- Shaft material
- Dimension
- XY-table
- Standard

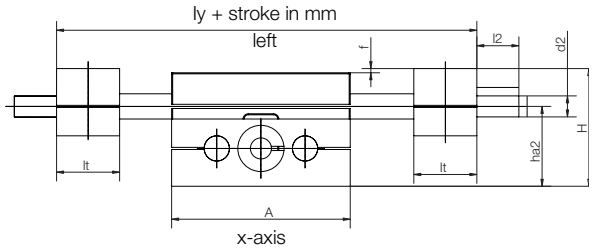

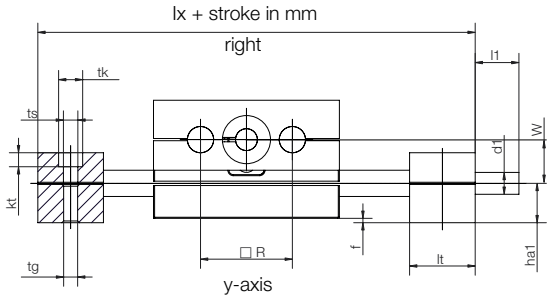

Dimensions [mm]

Part No.	Max. stroke length [mm]	A	H	E1	E2	Base length	Base length	R	f	lt	tk	ts	tg	kt
		–0.3		±0.15	±0.15	lx	ly			±0.1				
HTS-XY-08-AWM	150	65	42	52	56	96	96	32	1.5	15.5	10	5.5	M6	7
HTS-XY-12-AWM	350	85	56	70	73	145	145	42	2	30	11	6.6	M8	6.4
HTS-XY-12-AWM-PL	350	85	56	70	73	145	145	42	2	30	11	6.6	M8	6.4
HTS-XY-20-EWM-PL[93]	500	130	86	108	115	202	202	72	2	36	15	9.0	M10	8.6

Part No.	sg	d	T	l1	d1	d1	l2	d2	d2	ha1	ha2	W
					Standard	Alternative		Standard	Alternative			ha2–ha1
HTS-XY-08-AWM	M5	8	Tr6x2/Tr6.35x2.54	15.5	5	–	15	5	–	13	29	16
HTS-XY-12-AWM	M6	12	Tr10x2	17	Tr10x2	6 h9	17	Tr10x2	6 h9	18	38	20
HTS-XY-12-AWM-PL	M6	12	Tr10x2	17	Tr10x2	6 h9	17	Tr10x2	6 h9	18	38	20
HTS-XY-20-EWM-PL[93]	M8	20	TR18x4	26	TR18x4	12 h9	26	12 h9	–	23	63	40

Required accessories (e.g. hand wheel) can be ordered left- or right-mounted in the y-direction.
Order example for HTS-XY-12-AWM-L-200-300-HR, left adjustment, stroke 200/300 mm, 2 hand wheels
[93] For size 20 we recommend stainless steel shafts (EWM), AWM also available

DryLin® HTS - Product range

Order key for a complete system:

HTS-12-AWM-150-HR-ES

Lead screw material
- Blank: Carbon steel
- ES: Stainless steel 1.4305 (standard with EWM)
- AL: Anodized aluminum

Options
- Blank: Without extras (standard)
- HK: Lead screw clamp
- PA: Position indicator
- HR: Hand wheel
- PL: Preloaded
- HTX: High temperature version up to 356°F (+180 °C)
- HYD: Hygienic Design
- Z: Optional standard journal (10x2)
- FF: Fast Forward
- ZB: Zero-Backlash

Stroke length in mm

Shaft material
- AWM: Hard anodized aluminum
- SWM: Case hardened steel (1.1213)
- EWM: Stainless steel X105 (1.4125)

Dimensions
- 12: Shaft ø 12 mm (HTS, HTSC, HTSS)
- 20: Shaft ø 20 mm (HTS, HTSC, HTSS)
- 30: Shaft ø 30 mm (HTS, HTSC)
- 40: Shaft ø 40 mm (HTSC)
- 50: Shaft ø 50 mm (HTSC)

Type
- HTS: Standard
- HTS-PL: Preload
- HTSC: Flexible
- HTS-BB: With ball-bearing mounted lead screw
- HTSS: With high helix lead screw
- HTS-XY: cross slide

delivery time
with aluminum shaft AWM: 2-3 days, with stainless steel shafts EWM or steel shaft SWM: 3-8 days

DryLin® HTS - Product range

Order key XY-table

HTS-XY-12-AWM-PL-L-200-300-HR-ES

Lead screw material
- Blank: Carbon steel
- ES: Stainless steel 1.4305 (Standard with EWM)

Accessories/Options
- Blank: Without extras (standard)
- HK: Lead screw clamp (2x)
- PA: Position indicator (2x)
- HR: Hand wheel (2x)
- HTX: High temperature version up to 356°F (+180°C)
- Z: Optional standard journal (12x7)

Stroke y-direction

Stroke x-direction

Adjustment y-unit
- L: Lead screw end on the left side
- R: Lead screw end on the right side

Preload
- Blank: Standard
- PL: Preloaded

Shaft material
- AWM: Hard anodized aluminum
- SWM: Case hardened steel (1.1213)
- EWM: Stainless steel X105 (1.4125)

Dimensions
- 12: Size ø 12 mm
- 20: Size ø 20 mm

Type XY-Table

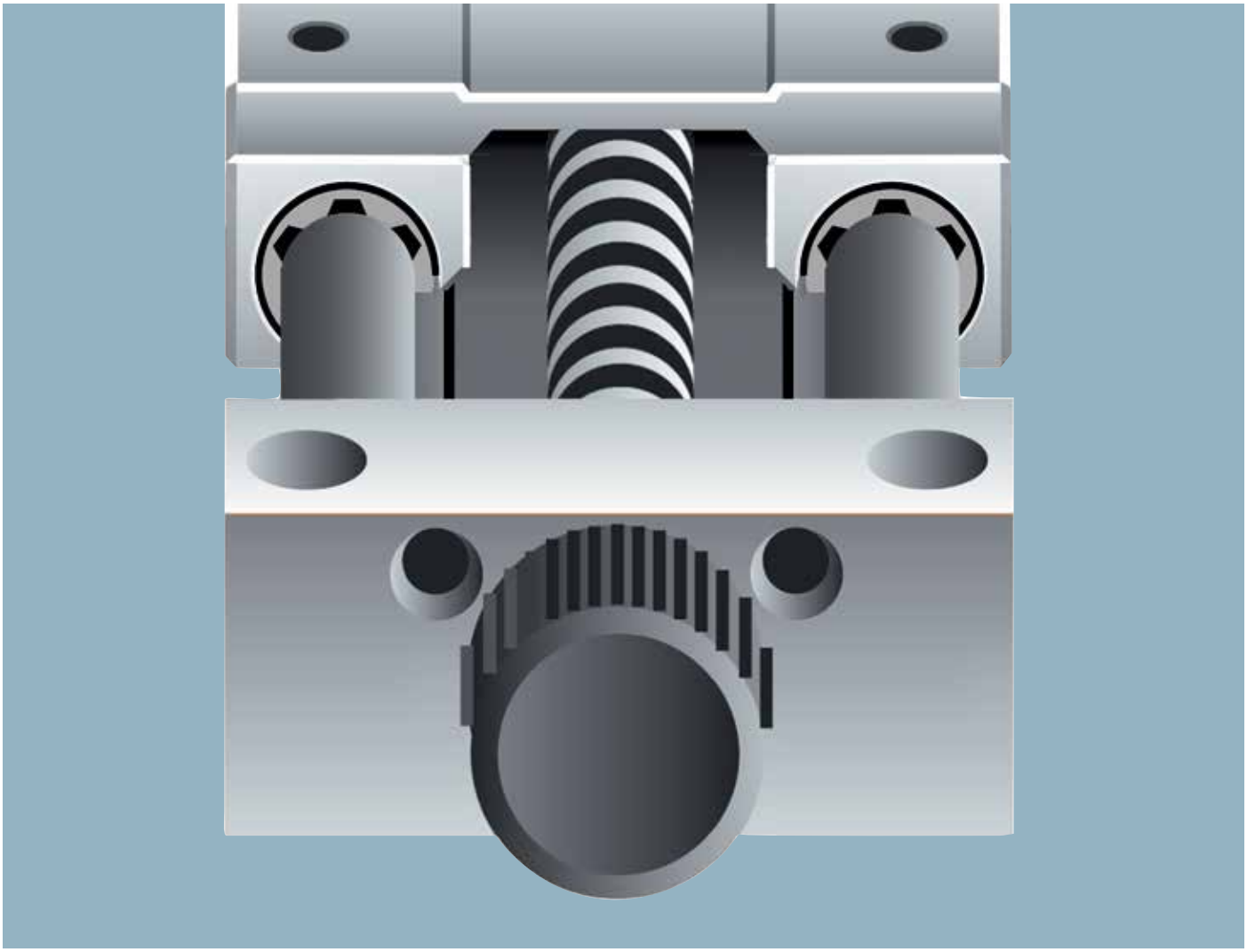

DryLin® General Drive Technology: linear modules SLW

- Self-lubricating linear modules based on DryLin® W
- Torsion-resistant dual shaft rails
- Many carriage options
- Trapezoidal or high-helix lead screw drives
- Suitable for manual and motor-operated adjustments

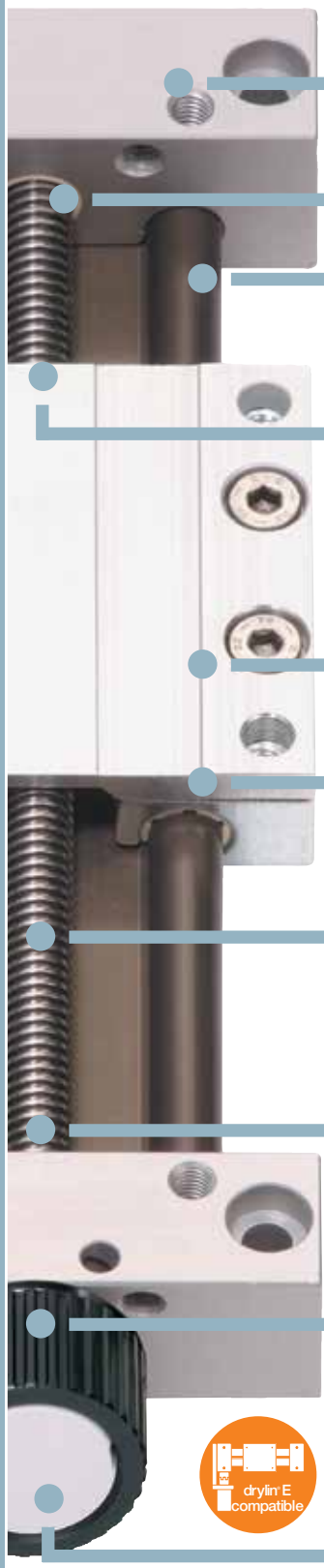

Shaft end supports are made from anodized aluminum, chromated die-cast zinc or plastic

Lead screw mounted with plain or ball bearings

DryLin® W linear guide system

Self-lubricating and maintenance-free DryLin® lead screw nuts

Carriages with four DryLin® W individual bearings with self-lubricating DryLin® liners

Mounting plates made from anodized aluminum

Lead screw material: steel or stainless steel

Drive: self-locking (non-back-driveable) trapezoidal thread or fast high helix thread

For manual adjustments, large range of accessories available ➤ **Page 1293**

Also available with motor as a ready to install linear drive (DryLin® E ➤ **Page 1317**)

Linear modules – DryLin® SLW

DryLin® W Slide Tables are maintenance-free and offered in both belt and screw drives for simple bolt-on assembly. Offering design flexibility and corrosion-resistance, they are also ideal as a low cost solutions for reduced production and assembly time.

- Variable carriage widths and lengths
- Flat DryLin® guide rails or high profile
- Corrosion resistant made from stainless steel available

Typical application areas

- Format and lane adjustments
- Packaging machines ● Height adjustments
- 3D printers ● Camera adjustment

Online product finder

Carriage lengths: 60-250 mm
Carriage widths: 54-195 mm
Stroke lengths: up to 1250 mm

Detailed technical data
➤ www.igus.com/drylin-drivetechnology

Available in 3-8 days
Detailed information about delivery time online.

DryLin® SLW - Product overview

Linear module SLW – Compact

- Self-lubricating
- Ideal for hand-powered or slow motor applications
- High torsional stability stiffness, fully supported
- Cost-effective
- End blocks made of chromated zinc, anodized aluminum or plastic

➤ **Page 1264**

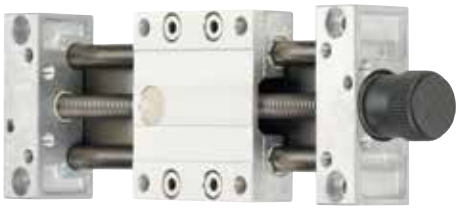

Linear module SLWE-PL with axial preload

- Self-lubricating and precise
- Preloaded trapezoidal nut (preload force: 50 N)
- Manually adjustable radial clearance, preloaded reduction of the axial clearance

➤ **Page 1265**

Linear module SLWE-BB "ball-bearing" version

- For motorized applications
- For higher speeds than non-ball bearing version
- Reduced clearance
- Up to 1500 rpm (based on length and load)

➤ **Page 1266**

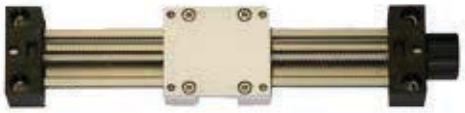

Linear module SLWS with lead screw

- Self-lubricating
- Fast positioning with high helix lead screws
- Up to 100 mm Stroke per rotation

➤ **Page 1267**

Linear module SAW

- Self-lubricating
- For motorized applications
- DryLin® W rail with higher profile to match motor heights
- Lead screw drive with ball-bearing
- Easy to add optional DryLin® E-motors

➤ **Page 1270**

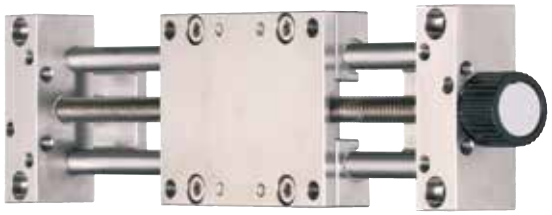

Linear module SLW – stainless steel version

- Self-lubricating
- With corrosion resistant stainless steel components
- Bearing material options:
  iglide® J - standard,
  iglide® A180 - FDA-compliant,
  iglide® T500 (X)* high temperature up to 482°F (+250°C)
- For environments involving contact with water and chemicals

➤ **Page 1271**

Linear module special designs

- SLW with protected lead screw for applications with high levels of dirt
- SLWT with dual lead screw
- X-Y cross slides

➤ **Page 1272**

DryLin® SLW - Product range - Trapezoidal thread

SLW - Compact

Based on our innovative DryLin® W double rail system, the SLW offers a fully supported rail with resistance to twisting and deflection. SLW also offers a lower profile than most other lead screw tables and runs absolutely maintenance-free.

Order key
complete ➤ Page 1274

SLW-1040

Dimension
Compact

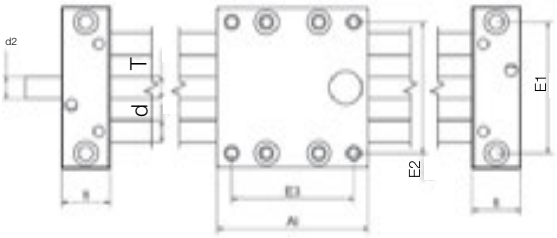

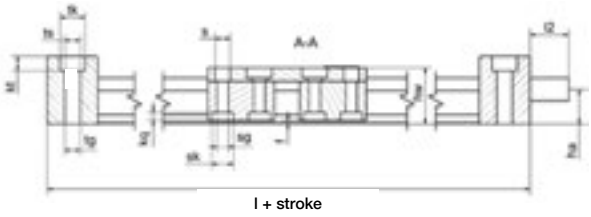

drylin E compatible

Available as a motorized version
DryLin® E ➤ **Page 1317**

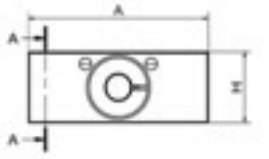

Technical data and dimensions [mm]

Part No.	Design ■ = square rail ● = round rail	Max. stroke length [mm]	Shaft weight [kg]	Additional (per 100 mm) [kg]	Max. static load capacity axial [N]	Max. static load capacity radial [N]	End block material
SLW-0630	■	300	0.2	0.08	50	200	Plastic
SLW-1040	●	750	0.7	0.10	700	2,800	Zinc die-casting
SLW-1080	●	750	0.9	0.20	700	2,800	Aluminum
SLW-10120	●	750	1.6	0.25	700	2,800	Aluminum
SLW-1660	●	750	1.5	0.30	1,200	4,600	Aluminum
SLW-2080	●	1,000	3.0	0.40	1,600	6,400	Aluminum
SLW-25120	●	1,250	5.9	0.90	2,500	10,000	Aluminum

Part No.	A –0.3	Al[94] –0.3	H	E1 ±0.15	E2 ±0.15	E3 ±0.15	l	hw	f	lt ±0.1	tk	ts	tg
SLW-0630	54	60	20	40	45	51	100	18	1.2	20	11	6.6	–
SLW-1040	74	69	29	60	60	56	113	24	1.5	22	11	6.8	M8
SLW-1080	108	100	29	94	94	87	144	24	1.5	22	11	6.8	M8
SLW-10120	154	100	29	140	140	87	144	24	1.5	22	11	6.8	M8
SLW-1660	104	100	37	84	86	82	150	35	1.5	25	15	9.0	M10
SLW-2080	134	150	46	116	116	132	206	44	1.5	28	15	8.6	M10
SLW-25120	200	150	60	173	173	128	220	55	2.5	35	20	13.5	M14

Part No.	kt ±0.1	s	sk	sg	kq	d	T	l2	d2 Standard	ha
SLW-0630	8.0	4.5	7.0	M4	2.0	6	M8	15	M8	9.5
SLW-1040	6.4	6.6	9.5	M6	4.4	10	Tr10x2	17	Tr10x2[92]	14.5
SLW-1080	6.4	6.6	9.5	M6	4.4	10	Tr10x2	17	Tr10x2[92]	14.5
SLW-10120	M8	6.4	9.5	M6	4.4	10	Tr10x2	17	Tr10x2[92]	14.50
SLW-1660	8.6	9.0	11	M8	5.5	16	Tr14x4	20	Tr14x4[92]	18.5
SLW-2080	8.6	9.0	14	M8	5.5	20	Tr18x4	26	12h9	23.0
SLW-25120	12.6	11.0	15	M8	5.0	25	Tr24x5	38	14h9	30.0

[92] Lead screw end unmachined; [94] Carriages also in 100, 150, 200 and 250 mm lengths available on request

DryLin® SLW - Product range - Trapezoidal thread

SLWE-PL - Preload

The new preload version DryLin® SLWE-PL linear slide table offers and additional benefit to the standard systems. In the preloaded version the axial clearance is adjusted by two trapezoidal nuts. The carriage can be adjusted manually by a set screw.

Order key complete ➤ Page 1274

SLWE-1040-PL

- Preload
- Dimension
- Adjustable clearance
- Compact

drylin® E compatible

Available as a motorized version DryLin® E ➤ **Page 1317**

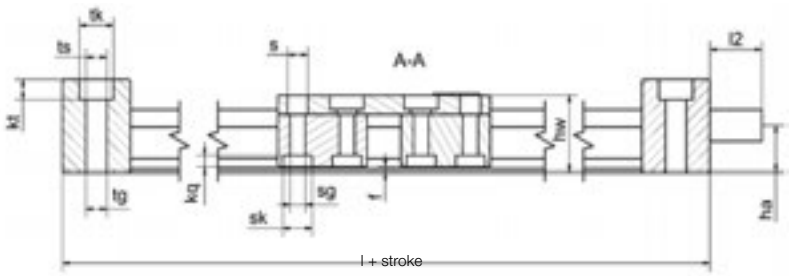

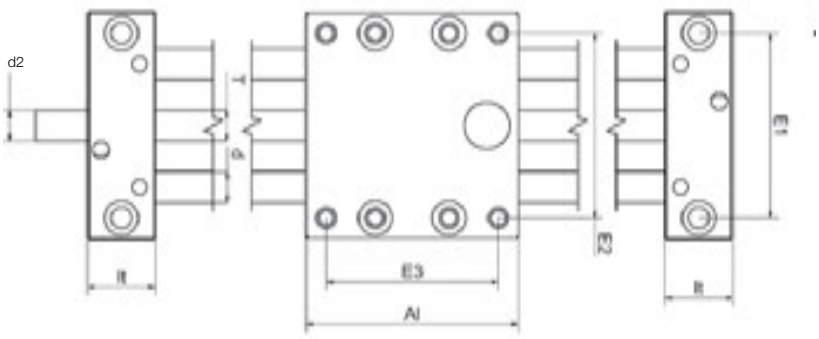

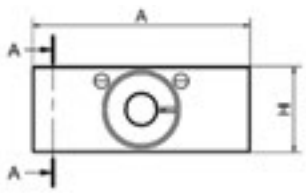

Technical data ➤ See SLW on left side

Dimensions [mm]

Part No.	A –0.3	Al[94] –0.3	H	E1 ±0.15	E2 ±0.15	E3 ±0.15	l	hw	f	lt ±0.1	tk	ts
SLWE-1040-PL	74	69	29	60	60	56	113	24	1.5	22	11	6.8
SLWE-1080-PL	108	100	29	94	94	87	144	24	1.5	22	11	6.8
SLWE-1660-PL	104	100	37	84	86	82	150	35	1.5	25	15	9.0
SLWE-2080-PL	134	150	46	116	116	132	206	44	1.5	28	15	8.6

Part No.	tg	kt ±0.1	s	sk	sg	kq	d	T	l2	d2 Standard	ha
SLWE-1040-PL	M8	6.4	6.6	9.5	M6	4.4	10	Tr10x2	17	Tr10x2[92]	14.5
SLWE-1080-PL	M8	6.4	6.6	9.5	M6	4.4	10	Tr10x2	17	Tr10x2[92]	14.5
SLWE-1660-PL	M10	8.6	9.0	11.0	M8	5.5	16	Tr14x4	20	Tr14x4[92]	18.5
SLWE-2080-PL	M10	8.6	9.0	14.0	M8	5.5	20	Tr18x4	26	12h9	23.0

[92] Lead screw end unmachined; [94] Carriages also in 100, 150, 200 and 250 mm lengths available on request

DryLin® SLW - Product range - Trapezoidal thread

SLWE-BB – With ball bearing lead screw supports

- For motorized applications
- Lower drive force
- Optimized and adjustable clearance
- Up to 1,500 rpm (according to length and load)
- Aluminum DryLin® W guide rails, hard anodized
- Quiet operation – reduced vibration of the overall system
- Ball bearings in both shaft end supports
- Available accessories ➤ **Page 1293**
- Lead screw nuts are available separately ➤ **Page 1214**

Order key
complete ➤ Page 1274

SLWE-BB-1040

Dimension
Ball bearing
Adjustable
Compact

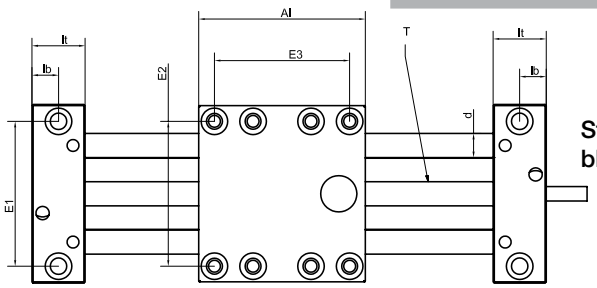

Standard pillow block image shown

drylin® E compatible

Available as a motorized version
DryLin® E ➤ **Page 1317**

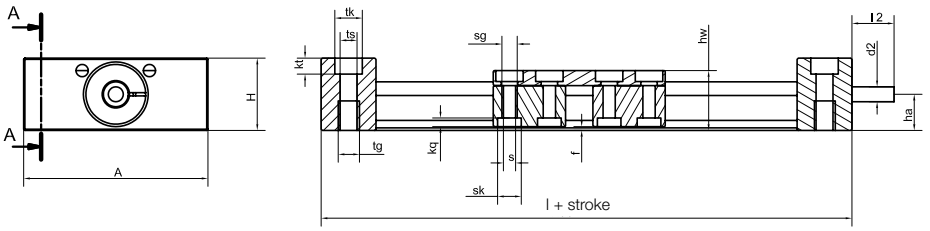

Technical data

Part No.	Design[96] ■ = square rail ● = round rail	Max. stroke length	Weight	Additional (per 100 mm)	Max. static load capacity axial	Max. static load capacity radial	Max. rotation speed	Max. feed rate
		[mm]	[kg]	[kg]	[N]	[N]	[1/min]	[m/min]
SLW-BB-0630	■	300	0.25	0.08	100	200	1,000	1.5
SLWE-BB-1040	●	500	0.90	0.10	500	2,000	1,500	3.0
SLWE-BB-1080	●	500	1.10	0.20	500	2,000	1,500	3.0
SLWE-BB-1660	●	750	1.80	0.30	700	2,800	1,500	6.0
SLWE-BB-2080	●	900	3.30	0.40	1,250	5,000	1,500	6.0

Dimensions [mm]

Part No.	A -0.3	Al -0.3	H	E1 ±0.15	E2 ±0.15	E3 ±0.15	l	hw	f	lt ±0.1	lb	tk	ts	tg
SLW-BB-0630	54	60	20	40	45	51	112	18	1.2	26	14	11	6.8	M8
SLWE-BB-1040	74	69	29	60	60	56	129	24	1.5	30	19	11	6.8	M8
SLWE-BB-1080	108	100	29	94	94	87	144	24	1.5	30	19	11	6.8	M8
SLWE-BB-1660	104	100	37	84	86	82	170	35	1.5	35	22.5	15	9.0	M10
SLWE-BB-2080	134	150	46	116	116	132	230	44	1.5	40	26	15	8.6	M10

Part No.	kt ±0.1	sk	sg	kq	s	d	T	l2	d2 Standard	d2[95] on request	ha
SLW-BB-0630	8.0	7.0	M4	2.0	4.5	6	Tr8x1.5	15	Tr8x1.5	–	9.5
SLWE-BB-1040	6.4	9.5	M6	4.4	6.6	10	Tr10x2	17	Tr10x2	6 h9	14.5
SLWE-BB-1080	6.4	9.5	M6	4.4	6.6	10	Tr10x2	17	Tr10x2	6 h9	14.5
SLWE-BB-1660	8.6	11.0	M8	5.5	9.0	16	Tr14x4	20	Tr14x4	8 h9	18.5
SLWE-BB-2080	8.6	14.0	M8	5.5	9.0	20	Tr18x4	26	12 h9	–	23.0

[95] Optional machined lead screw end [96] Double rails, square ➤ Page 928, round ➤ Page 932

DryLin® SLW - Product range - High helix thread

SLWS – Compact with high helix thread

- With high helix lead screws
- Diameter x lead: 08x15, 10x12, 10x50, 18x100
- Compact
- High torsional stability stiffness
- Aluminum DryLin® W guide rails, hard anodized
- BB-version with ball bearings lead screw supports available for motorized applications
- Available accessories ➤ **Page 1293**
- Lead screw nuts are available separately ➤ **Page 1214**

Order key
complete ➤ Page 1274

SLWS-0630-08x15

- Pitch
- Dimension
- High helix thread
- Compact

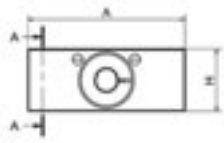

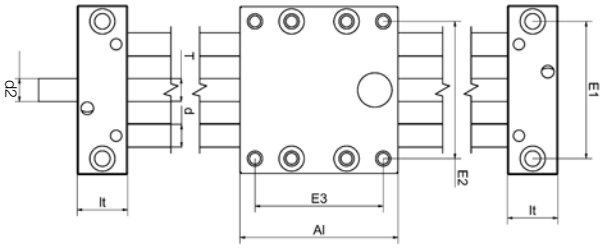

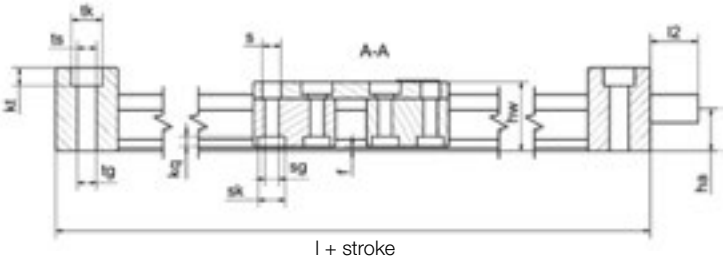

Technical data and dimensions [mm]

Part No.	Design[96] ■ = square rail ● = round rail	Max. stroke length	Weight	Additional (per 100 mm)	Max. static load capacity axial	Max. static load capacity radial
			[kg]	[kg]	[N]	[N]
SLWS-0630-08x15	■	300	0.2	0.08	50	200
SLWS-1040-10x12	●	750	0.7	0.10	100	400
SLWS-1040-10x50	●	750	0.7	0.10	100	400
SLWS-1080-10x12	●	750	0.9	0.20	100	400
SLWS-1080-10x50	●	750	0.9	0.20	100	400
SLWS-2080-18x100	●	750	0.9	0.20	400	1,600

Part No.	A –0.3	Al –0.3	H	E1 ±0.15	E2 ±0.15	E3 ±0.15	l	hw	f	lt ±0.1	tk	ts	tg
SLWS-0630-08x15	54	60	20	40	45	51	100	17.5	1.2	20	11	6.6	–
SLWS-1040-10x12	74	69	29	60	60	56	113	24	1.5	22	11	6.8	M8
SLWS-1040-10x50	74	69	29	60	60	56	113	24	1.5	22	11	6.8	M8
SLWS-1080-10x12	108	100	29	94	94	87	144	24	1.5	22	11	6.8	M8
SLWS-1080-10x50	108	100	29	94	94	87	144	24	1.5	22	11	6.8	M8
SLWS-2080-18x100	134	150	46	116	116	132	206	44	1.5	28	15	8.6	M10

Part No.	kt ±0.1	s	sk	sg	kq	d	T	l2	d2	ha
SLWS-0630-08x15	8.0	4.5	7.0	M4	2.0	6	Sg8x15	15	Sg8x15[92]	9.5
SLWS-1040-10x12	6.4	6.6	9.5	M6	4.4	10	Sg10x12	17	Sg10x12[92]	14.5
SLWS-1040-10x50	6.4	6.6	9.5	M6	4.4	10	Sg10x50	17	Sg10x50[92]	14.5
SLWS-1080-10x12	6.4	6.6	9.5	M6	4.4	10	Sg10x12	17	Sg10x12[92]	14.5
SLWS-1080-10x50	6.4	6.6	9.5	M6	4.4	10	Sg10x50	17	Sg10x50[92]	14.5
SLWS-2080-18x100	12.6	11.0	15	M8	5.0	25	Sg18x100	38	14h9	30.0

[92] **Lead screw end unmachined** [96] **Double rails, square ➤ Page 928, round ➤ Page 932**

DryLin® SLW - Product range

SLW-PT – With protected lead screw

The DryLin® SLW Protect uses the robust DryLin® W profile as the perfect protective guard. The lead screw nut and lead screw are underneath the DryLin® W linear profile.

- Available with pitches 10x2, 10x12,10x50
- Low profile design
- 3 carriage lengths

drylin® E compatible

Available as a motorized version DryLin® E ➤ **Page 1317**

Order key
complete ➤ Page 1274

SLW-BB-PT-1040

- Dimension
- Protect
- Ball bearing
- Compact

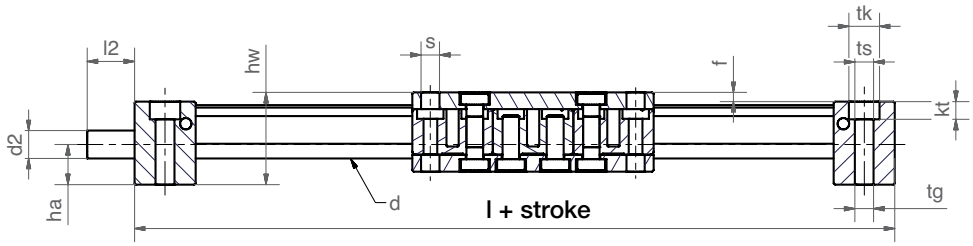

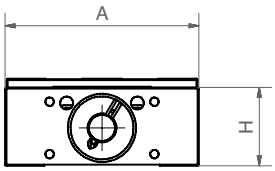

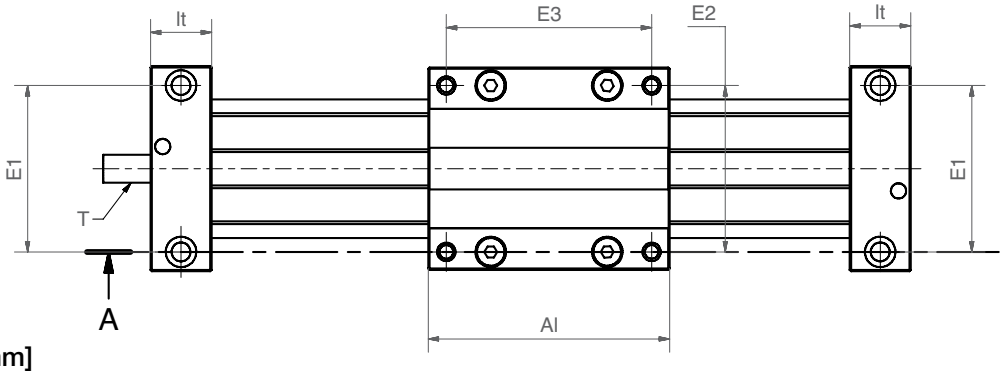

Technical data and dimensions [mm]

Part No.	Max. stroke length	Weight	Additional (per 100 mm)	Max. static load capacity		End block material
				axial	radial	
	[mm]	[kg]	[kg]	[N]	[N]	
SLW-PT-1040	750	0.75	0.20	700	2,000	Aluminum
SLW-BB-PT-1040	750	1.10	0.20	500	2,000	Aluminum

Part No.	A	Al	H	E1/E2	E3	l	hw	f	lt	tk	ts	tg
	-0.3	-0.3		±0.15	±0.15				±0.1			
SLW-PT-1040	74	87	29	60	74	131	33.25	3.25	22	11	6.8	M8
SLW-BB-PT-1040	74	87	29	60	74	147	33.25	3.25	30	11	6.8	M8

Part No.	kt	d	T	l2	d2	d2[98]	ha
	±0.1						
SLW-PT-1040	6.4	10	Tr10x2	17	Tr10x2	6 h9	14.50
SLW-BB-PT-1040	6.4	10	Tr10x2	17	Tr10x2	6 h9	14.50

[97] Depends on load and rotation speed [98] Thread/remaining thread visible

DryLin® SLW - Product range

SLWT – two linear units are rolled into one

The SLWT-1080 double linear unit offers a high degree of flexibility for format adjustments. With its slim and compact design 2 linear units are rolled into one, and can be controlled independently.

- Different lead screw pitches are available
- Separate manual adjustment of carriages
- Utilizes self-lubricating linear guide DryLin® W
- Clearance adjustment (optional)

Order key
complete ➤ Page 1274

SLWT-1080

- Dimension
- Double linear unit
- Compact

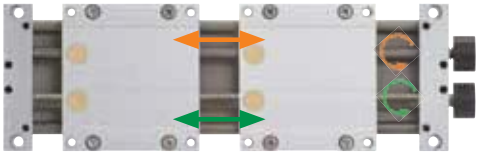

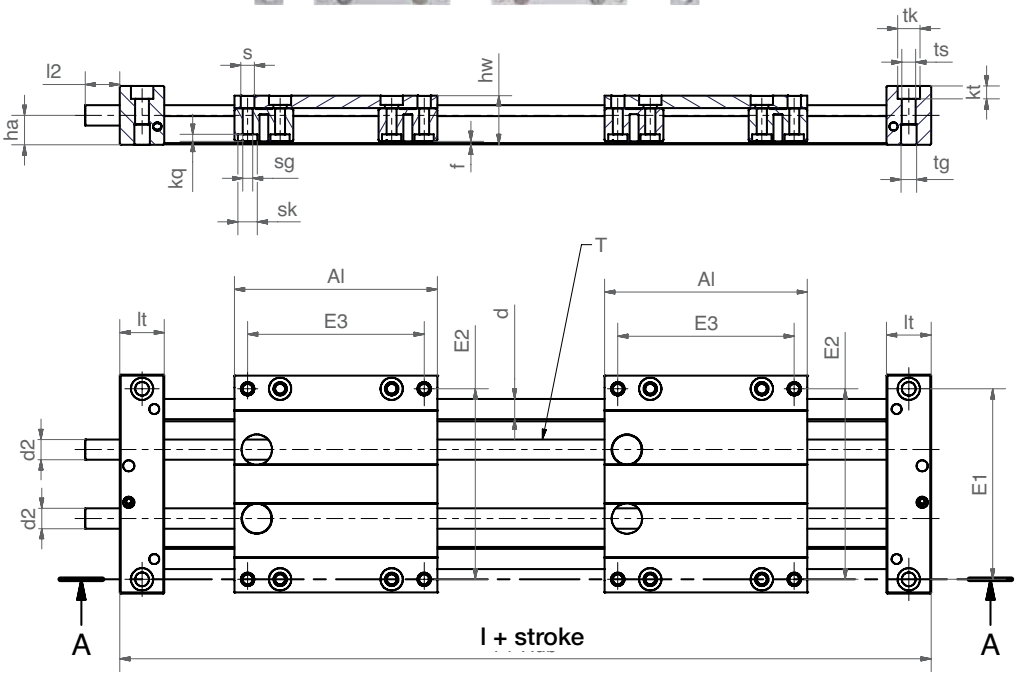

Technical data and dimensions [mm]

Part No.	Max. stroke length	Weight (per 100 mm)	Additional	Max. static load capacity axial	Max. static load capacity radial	End block material
	[mm]	[kg]	[kg]	[N]	[N]	
SLWT-1080	750	1.6	0.25	700	2,000	Aluminum

Part No.	A -0.3	Al -0.3	H	E1 ±0.15	E2 ±0.15	E3 ±0.15	l	hw	f ±0.1	lt	tk	ts
SLWT-1080	108	100	29	94	94	87	244	24	1.5	22	11	6.8

Part No.	tg ±0.1	kt	sk	s	sg	kq Standard	d Alternative	T	l2	d2	d2	ha
SLWT-1080	M8	6.4	9.5	6.6	M6	4.4	10	Tr10x2[92)]	17	Tr10x2	6 h9	14.50

[92)] Lead screw end unmachined

DryLin® SAW - Product range - Trapezoidal thread

SAW linear axis

- Higher profile to match motor heights
- Ideal for motorized applications
- Trapezoidal or high helix threads
- Ball bearing lead screw supports
- Aluminum DryLin® W guide rails, hard anodized
- Cost-effective and 100% maintenance free
- Available accessories ➤ **Page 1293**
- Lead screw nuts are available separately ➤ **Page 1214**

Order key
complete ➤ Page 1274

SAW-1040

Dimension
Type

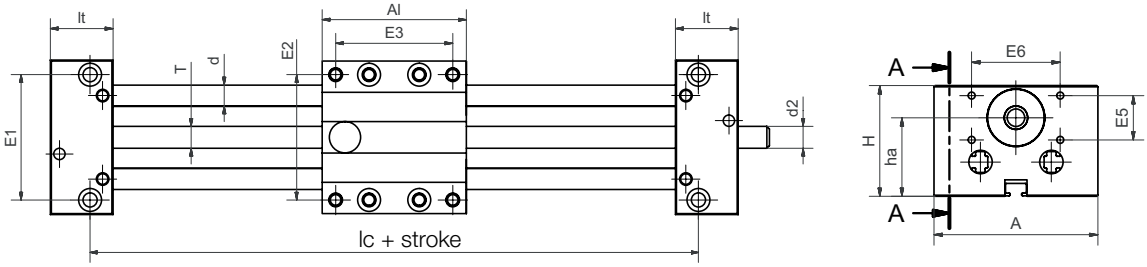

drylin® E compatible

Available as a motorized version DryLin® E ➤ **Page 1317**

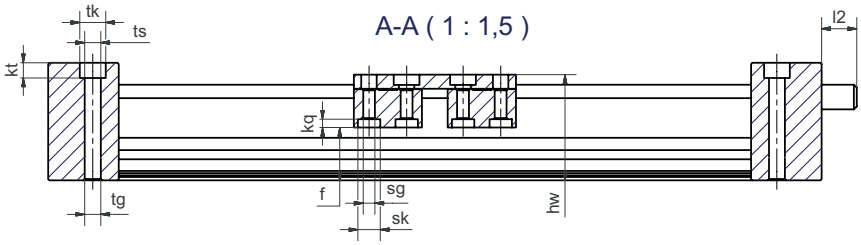

Technical data

Part No.	Stroke length [mm]	Weight [kg]	Additional (per 100 mm)	Max. speed [U/min.]	Max. static load capacity axial [N]	radial [N]
SAW-0630	300	0.5	0.1	1,000	100	400
SAW-1040	500	1.0	0.1	1,500	500	2,000
SAW-1080	750	1.9	0.2	1,500	750	2,000
SAW-1660	750	2.8	0.5	1,500	750	3,000

Dimensions [mm]

Part No.	A -0.3	Al -0.3	H	E1 +0.15	E2 +0.15	E3 +0.15	E5	E6	l	lc	hw	f	lt ±0.1
SAW-0630	54	60/100	32	40	45	51/91	11	23	112/152	92	30	13.5	26
SAW-1040	74	69/100/150	50	60	60	56/87/137	20	40	129/160/210	91	45	22.5	30
SAW-1080	108	100	58	94	94	87	–	–	163	131.5	49	22.5	31.5
SAW-1660	104	150	77	84	86	132	20	40	220	175	72	38.5	35

Part No.	tk	ts	tg	kt ±0.1	sk	sg	kq	d	T Ø	l2	d2	ha
SAW-0630	11	6.6	–	20	–	5	10	□5	8	15	Tr8x1.5	21.5
SAW-1040	11	6.8	M8	6.4	9.5	M6	3.5	10	10	17	Tr10x2[92)]	35.5
SAW-1080	11	6.8	M8	18	9.5	M6	3.5	10	10	17	Ø10	37.5
SAW-1660	15	9.0	M10	8.6	11	M8	5.5	16	14	20	Tr14x4	59.0

[92)] **Lead screw end unmachined**

DryLin® SLW - Product range

SLW-ES – stainless steel

- Stainless steel version with corrosion-resistant stainless steel components 303 (1.4305), CF8M (1.4408) or 316 (1.4571)
- Choice of bearing material:
  iglide® J = Standard
  iglide® A180 = FDA
  iglide® T500 = High temperature up to +482°F (250°C)
- Available accessories ➤ **Page 1293**

Order key
complete ➤ Page 1274

SLW-ESJ-1040

- Dimension
- Bearing material iglide® J
- Stainless steel
- Compact

drylin E compatible

Available as a motorized version
DryLin® E ➤ **Page 1317**

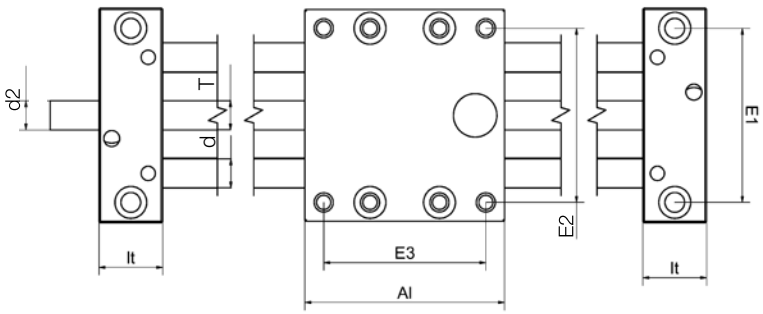

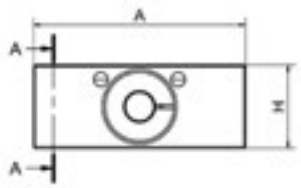

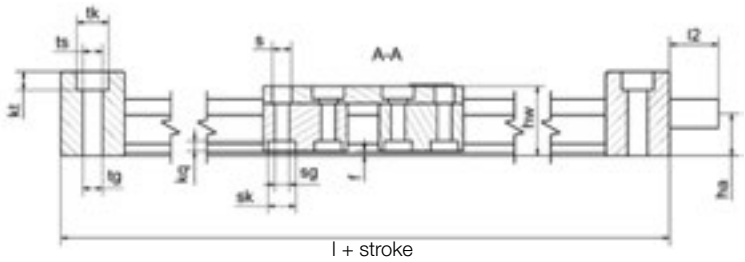

DryLin® STAINLESS STEEL

Technical data

Part No.	Shafts-Ø	Max. stroke length	Weight	Additional (per 100 mm)	Max. static load capacity	
	[mm]	[mm]	[kg]	[kg]	axial [N]	radial [N]
SLW-ESX-1040	10	750	1.4	0.2	700	2,800
SLW-ESA180-1040	10	750	1.4	0.2	700	2,800
SLW-ESJ-2080	20	1,000	5.7	0.64	1,600	6,400
SLW-ESA180-2080	20	1,000	5.7	0.64	1,600	6,400

Dimensions [mm]

Part No.	A	Al	H	E1	E2	E3	l	hw	f	lt	tk	ts	tg
	–0.3	–0.3		±0.15	±0.15	±0.15				±0.1			
SLW-ES-1040	74	100	29	60	60	87	144	24	1.5	22	11	6.8	M8
SLW-ES-2080	134	150	46	116	116	132	206	44	1.5	28	15	8.6	M10

Part No.	kt	s	sk	sg	kq	d	T	l2	d2	ha
	±0.1								Standard	
SLW-ES-1040	6.4	6.6	9.5	M6	4.4	10	Tr10x2	17	Tr10x2[92)]	14.5
SLW-ES-2080	8.6	9.0	14	M8	5.5	20	Tr18x4	26	12h9	23.0

[92)] **Lead screw end unmachined**

DryLin® SLW - Product range - XY Cross Slides

SLW-XY – compact XY-table

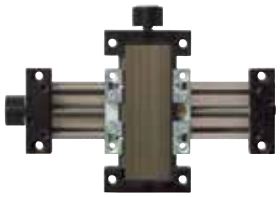

SLW-XY-0630

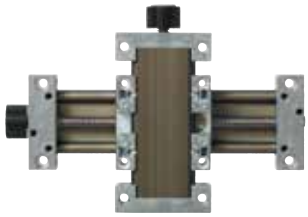

SLW-XY-1040

SLW-XY-1080

- Low-cost XY solution for manual adjustments
- Self-lubricating and corrosion resistant
- Uses aluminum DryLin® W guide rails, hard anodized
- Preload version SLWE-XY-PL also available (optional, sizes: 1040/1080) For better axial clearance and adjustable radial clearance
- Available accessories ➤ **Page 1293**

Order key
complete ➤ Page 1274

SLW-XY-1040-PL

- Preload (optional with sizes 1040 and 1080)
- Dimension
- XY-table
- Compact

drylin E compatible

Available as a motorized version DryLin® E ➤ **Page 1317**

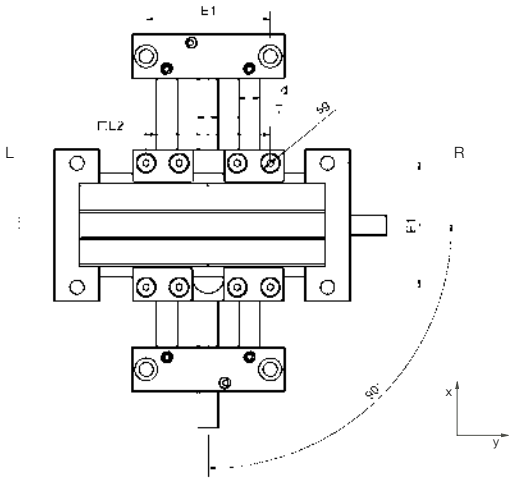

ly + Stroke in mm

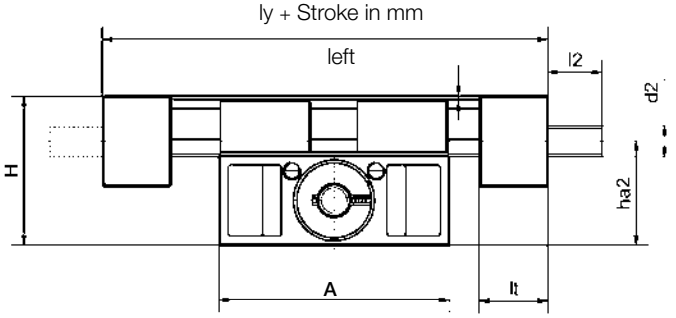

lx + Stroke in mm

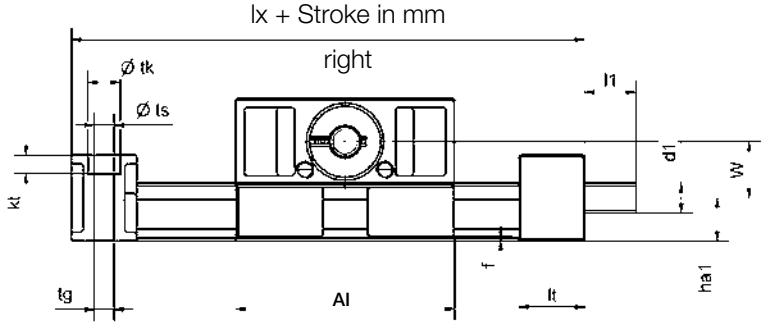

Dimensions [mm]

Part No.	Max. stroke length	A	Al	H	E1	E2	Base length	Base length	f	lt	tk	ts	tg	kt
	[mm]	–0.3			±0.15	±0.15	lx	ly			±0.1			
SLW-XY-0630	150	54	54	38	40	45	94	94	1.5	20	11	6.6	–	8
SLW-XY-1040	300	74	73	48	60	60	117	117	1.5	22	11	6.8	M8	6.4
SLW-XY-1080	300	108	107	48	94	94	151	151	1.5	22	11	6.8	M8	6.4

Dimensions [mm]

Part No.	sg	d	T	l1	d1	d1	l2	d2	d2	ha1	ha2	W
					Standard	Alternative		Standard	Alternative			ha2–ha1
SLW-XY-0630	M4	5	M8	15	M8	–	15	M8	–	9.5	28.5	18.4
SLW-XY-1040	M6	10	Tr10x2	17	Tr10x2	6 h9	17	Tr10x2	6 h9	14.5	33.5	20
SLW-XY-1080	M6	10	Tr10x2	17	Tr10x2	6 h9	17	Tr10x2	6 h9	14.5	33.5	19

DryLin® SLW - Product range - XY Cross Slides

SLW-XY-ES – compact XY-table – stainless steel

- Made with 300 series (VA) and 316 (V4A) stainless components
- For manual adjustments
- Flat and compact
- High torsional stability stiffness
- Structure entirely made from 300 series stainless steel materials
- 100% self-lubricating
- Chemical and corrosion resistant
- Available accessories ➤ **Page 1293**

DryLin® STAINLESS STEEL

drylin E compatible

Available as a motorized version
DryLin® E ➤ **Page 1317**

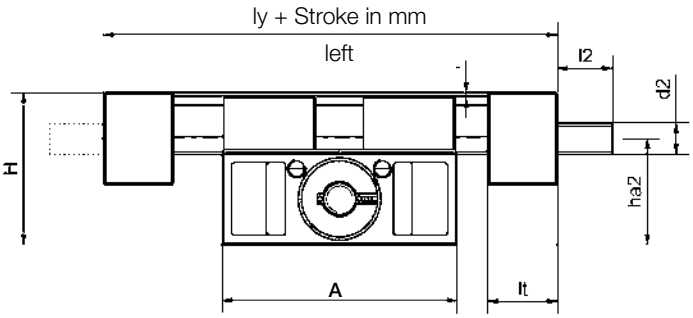

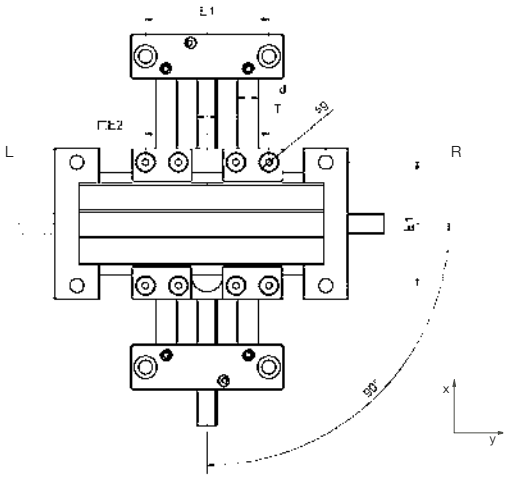

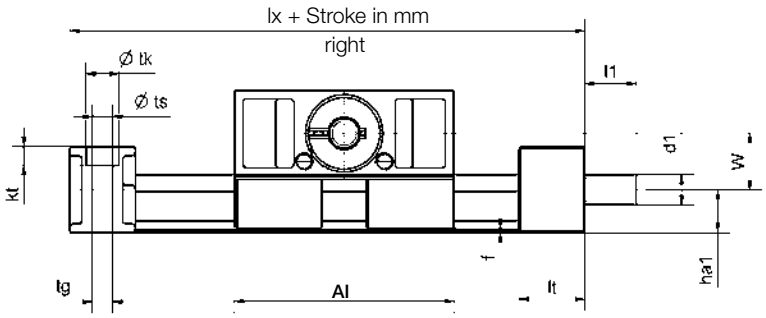

Dimensions [mm]

Part No.	Max. stroke length	A	Al	H	E1	E2	Base length	Base length	f	lt	tk	ts	tg	kt
	[mm]	–0.3			±0.15	±0.15	lx	ly			±0.1			
SLW-XY-ESJ-1040	300	74	73	48	60	60	117	117	1.5	22	11	6.8	M8	6.4

Dimensions [mm]

Part No.	sg	d	T	l1	d1	d1	l2	d2	d2	ha1	ha2	W
					Standard	Alternative		Standard	Alternative			ha2–ha1
SLW-XY-ESJ-1040	M6	10	Tr10x2	17	Tr10x2	6 h9	17	Tr10x2	6 h9	14.5	33.5	19

The hand wheel can be ordered left- or right-mounted in the y-direction.
Left: SLW-XY-ESJ-1040-L-200-300 for 200 mm stroke length on the x-axis and 300 mm on the y-axis
Right: SLW-XY-ESJ-1040-R-200-300 for 200 mm stroke length on the x-axis and 300 mm on the y-axis

DryLin® SLW - Order key

Order key for a complete system:

SLW-1040-150-HR-ES

Lead screw material

Blank: Carbon steel (standard)
ES: Stainless steel 1.4305
AL: Anodized aluminum

Additional options

Blank: without extras (standard)
HK: Lead screw clamp
PA: Position indicator
HR: Hand wheel
PL: Preloaded
Z: TR10x2 Standard journal option for 10x2
WT: V-drive

Stroke length in mm

Dimensions

0630: Shaft ø 6 mm, width 30 mm (SLW, SLWS)
1040: Shaft ø 10 mm, width 40 mm (SLW, SLWE)
1080: Shaft ø 10 mm, width 80 mm (SLW, SLWE)
1660: Shaft ø 16 mm, width 60 mm (SLW, SLWE)
2080: Shaft ø 20 mm, width 80 mm (SLW, SLWE)
25120: Shaft ø 25 mm, width 120 mm (SLW)

Type

SLW:	Standard
SLWE-PL:	With preload
SLWE-BB:	Leadscrew drive with ball-bearing
SLWS:	With high helix lead screw
SAW:	High design
SLW-ES:	Stainless steel version
SLW-XY:	XY cross slides

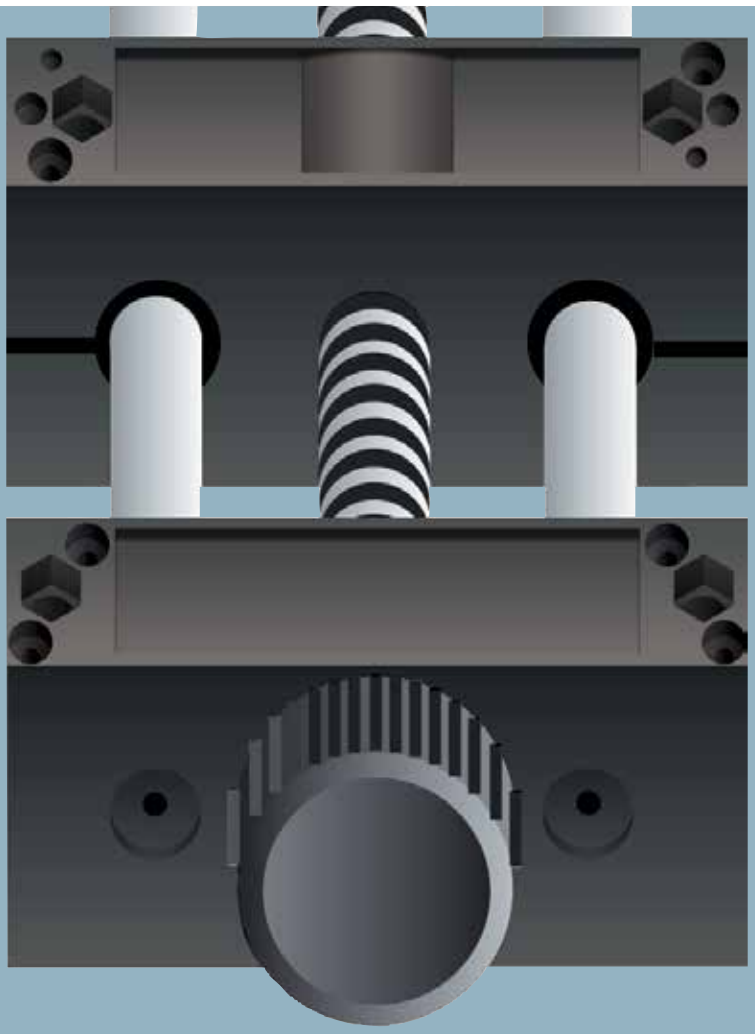

DryLin® General Drive Technology: linear modules - HTSP

- 100% self-lubricating
- Lightweight
- Cost-effective
- Corrosion resistant

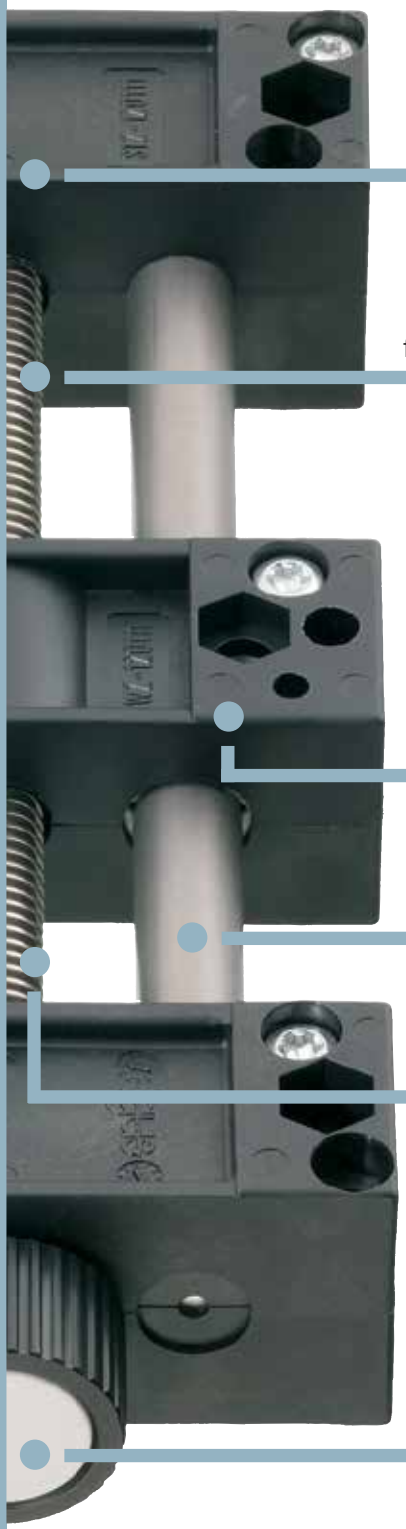

Linear modules – DryLin® HTSP

HTSP* is the most cost-effective and lightweight unit available. Recommended for handling low weight applications by hand or low-speed motor. HTSP works well in corrosive environments.

- Very light, flat design
- Ideal for multi-carriage solutions
- Low-cost alternative to home-made solutions

Typical application areas

- Gripper technology
- Format adjustments
- Camera adjustment

Online product finder
➤ www.igus.com/SHT-productfinder

Carriage lengths: 26-45 mm
Stroke lengths: up to 500 mm

Detailed technical data
➤ www.igus.com/DryLinSHTP

Available in 3-8 days
Detailed information about delivery time online.

*SHT and SHTP are the european equivalent of HTS and HTSP respectively

DryLin® HTSP - Product range

HTSP Mini – Small and low-cost – Solid plastic

- Miniature version
- Low weight
- Low price
- Corrosion resistant
- Carriages and end blocks made from high-performance polymers
- Available accessories
  ➤ Page 1293

Order key

HTSP-01-06-AWM

- Shaft material
- Dimension
- Design
- Type HTS-Plastic

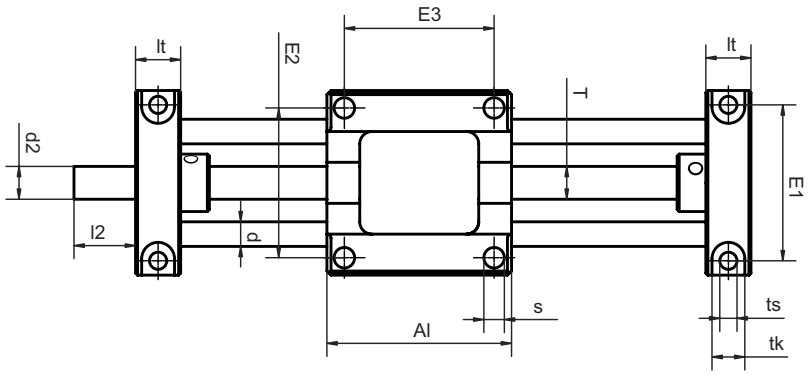

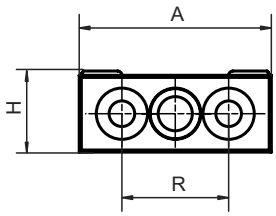

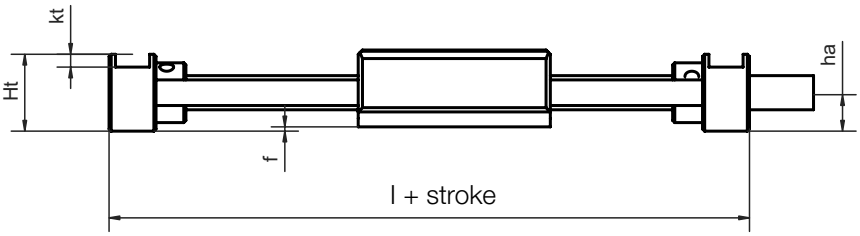

Technical data

Part No.	Max. stroke length	Aluminium shaft		Max. static load capacity		More Information
		Weight	Additional [kg]	axial	radial	
	[mm]	[kg]	(per 100 mm)	[N]	[N]	
HTSP-01-06-AWM	300	0.11	0.06	50	50	Carriage, square, with 4 symmetrical mounting holes

Dimensions [mm]

Part No.	A	Al	H	Ht	E1	E2	E3	l	R	f	kt	lt	tk	ts
HTSP-01-06-AWM	45	45	19	18	38	36.5	36.5	67	25	1	3	11	8	42

Part No.	s	d	T	l2	d2[99]	ha
HTSP-01-06-AWM	5.1	6	M8	15	M8	9

[99] Lead screw end unmachined (standard)

DryLin® HTSP - Product range

HTSP – Light and robust – Plastic and aluminum

- Corrosion-resistant
- Lightweight
- Low-profile design
- Ideal for multi-carriage solutions
- Available accessories

➤ Page 1293

Order key

HTSP-01-10

Dimension
Design
Type HTS plastic

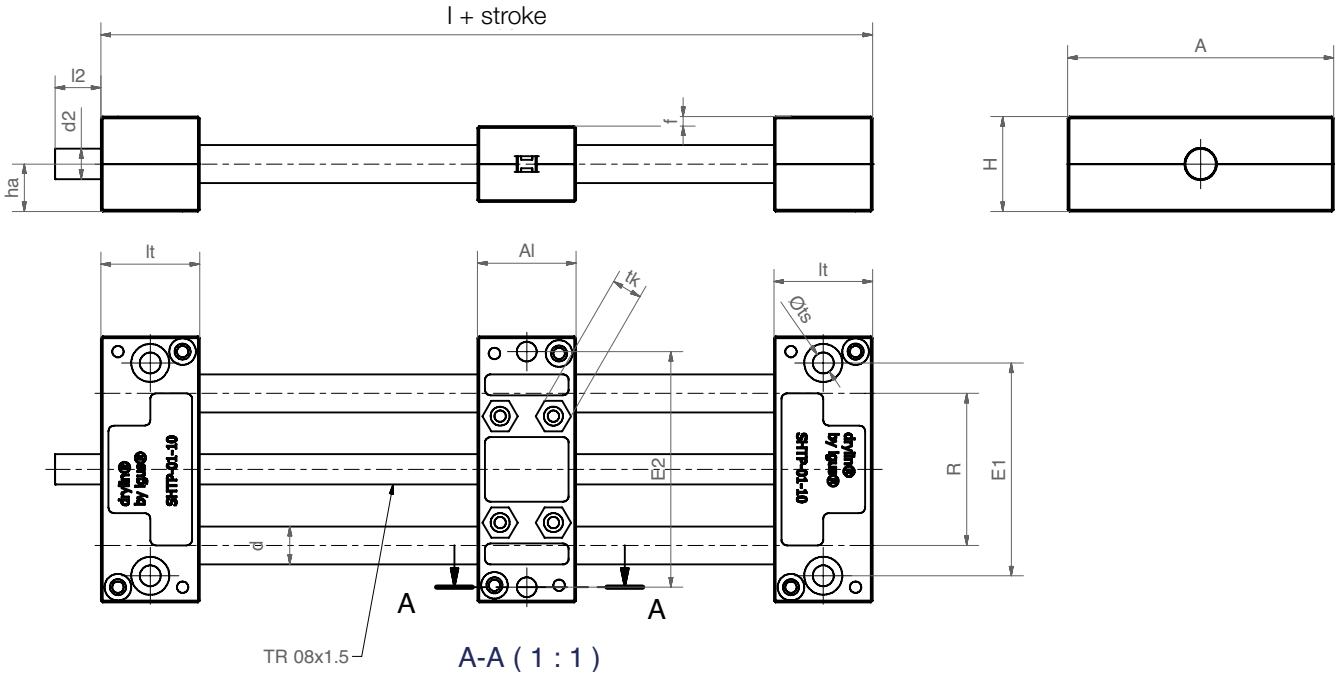

Technical data

Part No.	Max. stroke length	Aluminium shaft		More Information
		Weight	Additional [kg]	
	[mm]	[kg]	(per 100 mm)	
HTSP-01-10	350	0.2	0.08	Liners and lead screw nuts made from iglide® J

Dimensions [mm]

Part No.	A	Al	H	E1	E2	l	R	f	lt	tk	ts
									±0.1		+0.15
HTSP-01-10	70	26	25	56	62	78	40	2.5	26	8	5.5

Part No.	s	sg	d	T	l2	d2[99]	ha	Max. static load capacity	
								axial	radial
								[N]	[N]
HTSP-01-10	5.2	M5	10	Tr10x1.5	15	Tr08x1.5	12.5	100	400

[99] Lead screw end unmachined (standard)

DryLin® HTSP - Product range

HTSP – Economical – Solid plastic

- Solid polymer design
- Lightweight
- Cost-effective
- Corrosion resistant
- Available accessories
  ➤ Page 1293

Order key

HTSP-01-12-AWM

- Shaft material
- Dimension
- Design
- Type HTS plastic

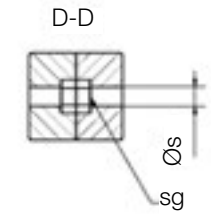

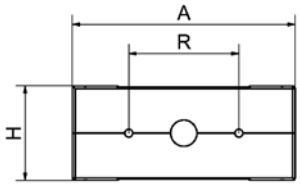

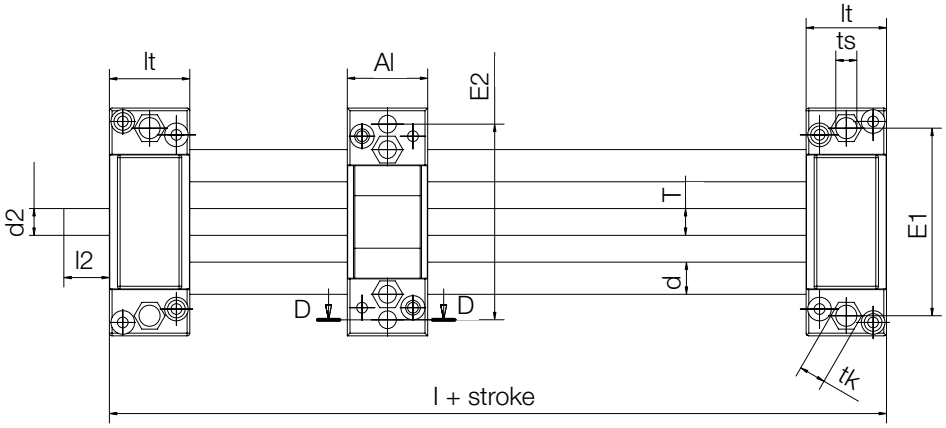

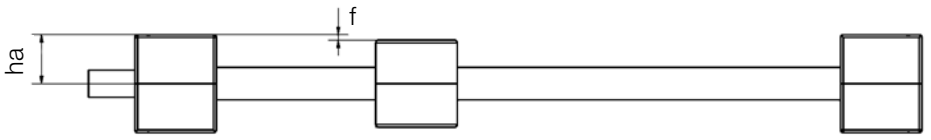

Technical data

Part No.	Max. stroke length	Aluminium shaft		More Information
		Weight	Additional [kg]	
	[mm]	[kg]	(per 100 mm)	
HTSP-01-12	500	0.35	0.11	Liners and lead screw nuts made from iglide® J
HTSP-02-12	500	0.35	0.11	Bearing and nut integrated into the carriage

Dimensions [mm]

Part No.	A	Al	H	E1	E2	l	R	f	lt	tk	ts
									±0.1		+0.15
HTSP-01-12	85	30	36	70	73	90	42	2	30	10	6.0
HTSP-02-12	85	30	36	70	73	90	42	2	30	10	6.0

Part No.	s	sg	d	T	l2	d2[99)]	ha	Max. static load capacity	
								axial	radial
								[N]	[N]
HTSP-01-12	6.3	M6	12	Tr10x2	17	Tr10x2	18	200	400
HTSP-02-12	6.3	M6	12	Tr10x2	17	Tr10x2	18	200	400

[99)] Lead screw end unmachined (standard)

DryLin® HTSP - Product range - Trapezoidal thread

HTSP-FF – Fast Forward

HTSP linear tables with quick release mechanism offers a combination of accurate positioning and fast manual adjustment.

- Light solid plastic
- For quick adjustments
- Non-backdriveable lead srew
- Only recommended for horizontal applications
- Max. stat. axial load 200 N
- Max. dynamic. axial load 50 N
- Available accessories

➤ **Page 1293**

Order key

HTSP-01-12-AWM-FF

- Fast Forward
- Shaft material
- Dimension
- Design
- Type HTS plastic

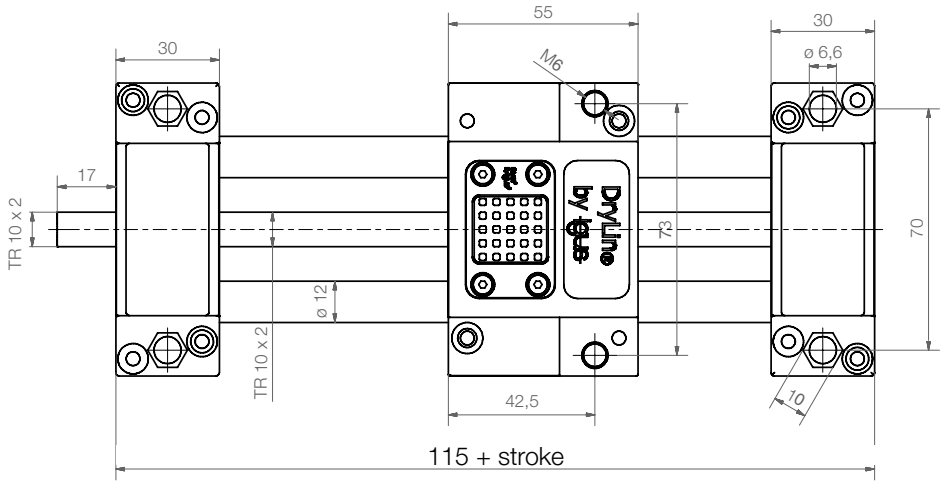

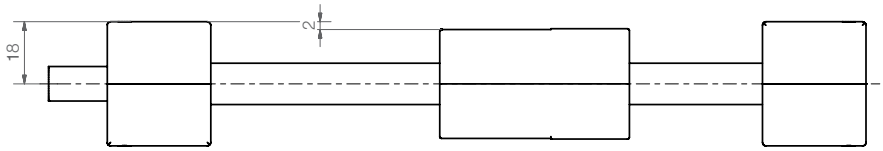

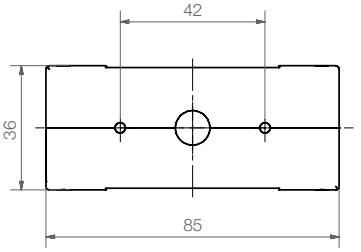

Technical data

Part No.	Max. stroke length [mm]	Weight [kg]	Additional weight (per 100 mm)
HTSP-01-12-AWM-FF[100)]	500	0.35	0.11

[100)] Liners and trapezoidal lead screw nut made from iglide® J

1.

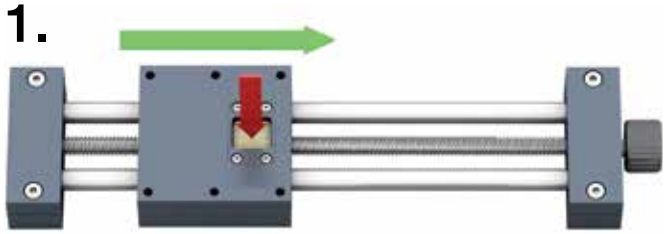

2.

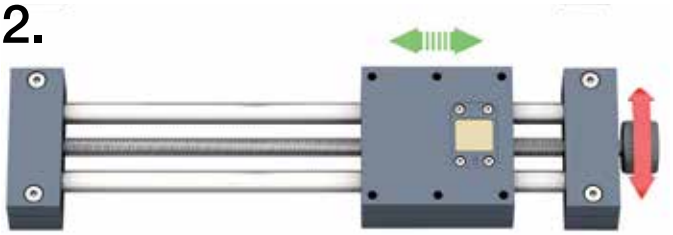

press > disengage > move manually > click into place > fine-tune

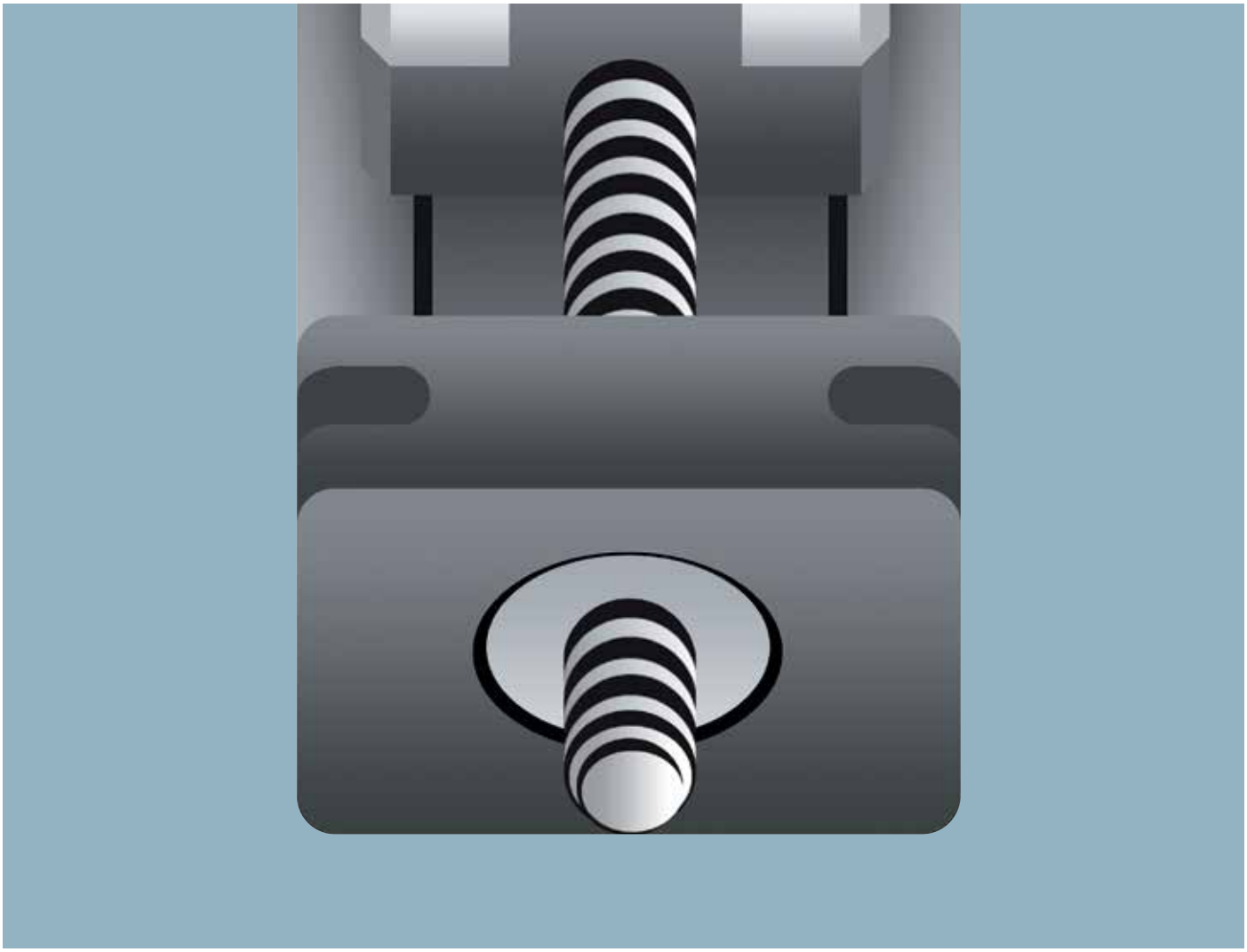

DryLin® General Drive Technology: miniature linear modules - SLN

- Small and compact
- Based on DryLin N size 27
- Cost-effective
- Adjustable versions available

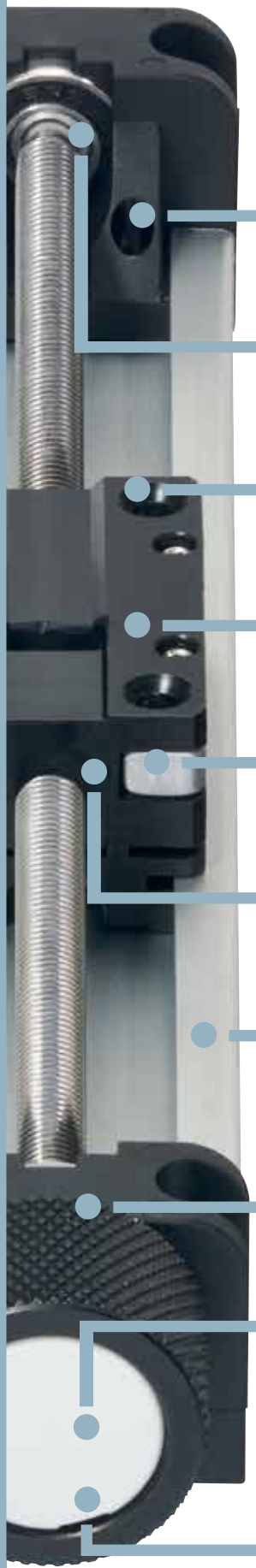

End blocks mde of corrosion resistant, robust plastic

Lead screw assembled with plain or ball bearings

Low-cost, robust plastic carriages

Carriage with radial clearance adjustment (standard series 04)

Metal thread inserts for fastening

Minimal backlash with preloaded nut (preload series 05)

Rail made from anodized aluminum

Lead screws made from stainless steel with pitch M5 (5x0.8 mm) or high helix thread (5x5, 6x12.7)

Available with hand wheels
➤ **Page 1293**

drylin® E compatible

Also available with motor as a ready to install linear drive (DryLin® E ➤ **Page 1317**)

Miniature linear modules – DryLin® SLN

DryLin® SLN linear systems provide a solution for small spaces. The system measures 28 x 22 mm with stroke lengths of up to 250 mm. Due to the plastic glides, it runs extremely quietly and is also very light. The profile is based on the tried-and-tested DryLin® N system, size 27. It is available with self-lubricating plain bearings or with ball bearings in the screw end supports for motorized applications. The DryLin® SLN linear system can be actuated manually using the hand wheel or combined with DryLin® E stepper and DC motors.

- Ultra-compact design
- 3 carriage types (basic/adjustable/preload)
- Clean, maintenance-free DryLin® low profile guide
- Modular design

Typical application areas

- Sensors
- Inspection technology
- Laboratory technology
- Medical technology

Online product finder
➤ www.igus.com/SHT-productfinder

Length of carriage: 35 mm
Stroke lengths: up to 250 mm

Detailed technical data
➤ www.igus.com/DryLinSLN

Available in 3-8 days
Detailed information about delivery time online.

DryLin® SLN - Product range

SLN miniature linear module

- Low-cost basic version
- Self-lubricating
- Lead screw mounted with plain bearings
- Retrofitting possible
- Available accessories

➤ **Page 1293**

Order key

SLN-27-03-0008

- Pitch
- Carriage version
  - 03: Basic
- Dimension
- Standard

drylin E compatible

Available as a motorized version
DryLin® E ➤ **Page 1317**

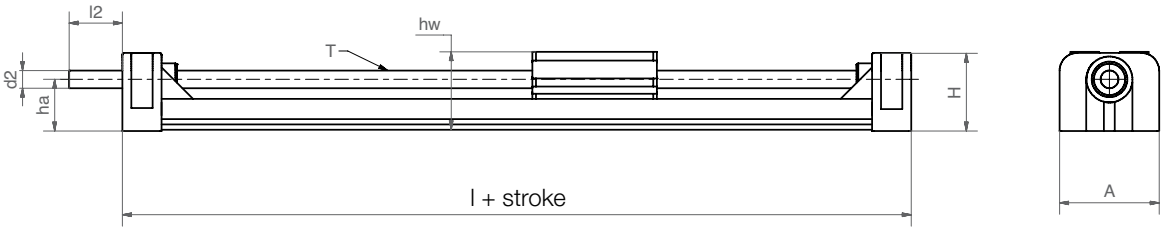

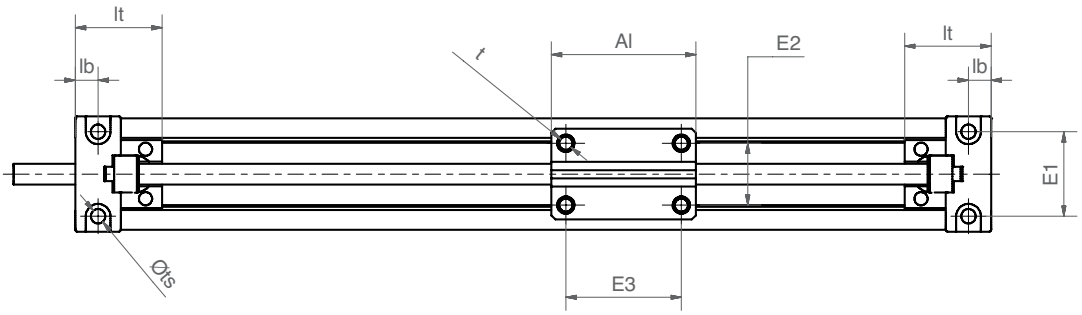

Technical data and dimensions [mm]

Part No.	Max. stroke length[101]	Weight	Additional	Max. static load capacity		Max. speed	Max. drive torque
			[kg]	axial	radial		
	[mm]	[kg]	(per 100 mm)	[N]	[N]	[U/min]	[Nm]
SLN-27-03-0008	250	0.5	0.40	10	40	100	0.1

Part No.	A	Al	H	E1	E2	E3	E11[102]	l	hw	lt	lb	ts	tg	T	d2[98]	l2	ha
	±0.2	-0.1	±0.2	±0.15	±0.15	±0.15			±0.2	±0.2							
SLN-27-03-0008	28	35	22	20.5	15	28	15	77	22	21	5.5	3.5	3.2	M5	5	15	14.5

[101] Fixed stroke lengths for SLN-BB option: 100/150/200/250 mm
[102] The dimension E11 can only be found in conjunction with the igus motor connection
[98] Thread/remaining thread visible

DryLin® SLN - Product range

SLN miniature linear module

- Small and compact
- Based on maintenance free DryLin® N 27 profile guide
- 100% self-lubricating
- BB-version (ball bearing) for motorized applications
- Manual and motorized operation possible
- Adjustable radial clearance and optional preload
- Available accessories ➤ **Page 1293**

drylin E compatible

Available as a motorized version DryLin® E ➤ **Page 1317**

Order key

SLN-27-14-0008

- Lead:
  - 0008: M5x0.8
  - 0050: SG5x5
  - 0025: DS6.35x2.54
  - 0127: SG6.35x12.7
  - 0254: DS6.35x25.4
- Carriage version
  - 4: Standard, adjustable
  - 5: Standard, preload
- Shaft end support type
  - 0: Plain bearing
  - 1: Ball bearing
- DryLin® N size 27
- Linear module

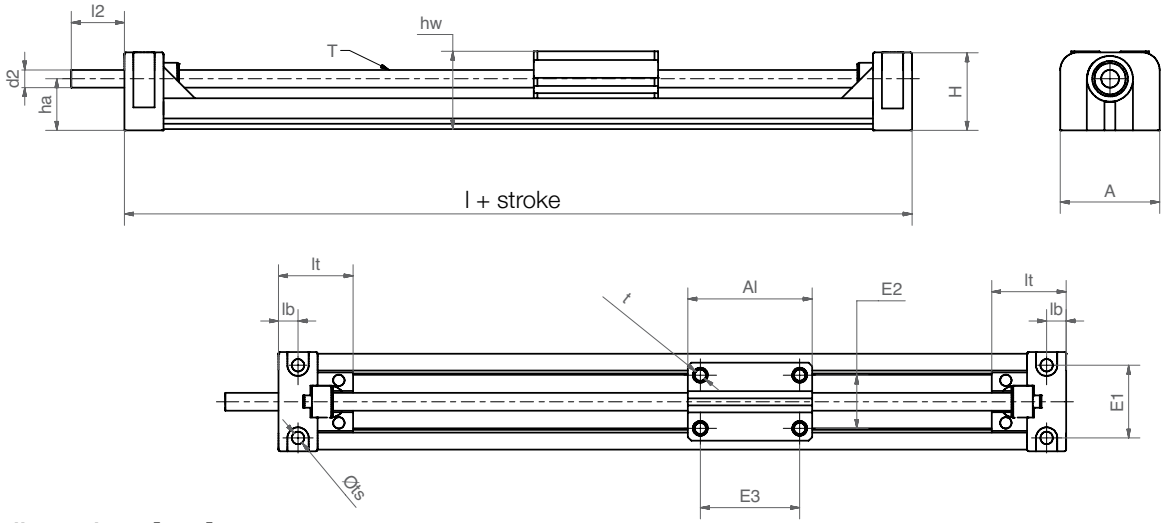

Technical data and dimensions [mm]

Part No.	Max. stroke length[101]	Weight	Additional	Max. static load capacity		Max. speed	Max. drive torque
			[kg]	axial	radial		
	[mm]	[kg]	(per 100 mm)	[N]	[N]	[U/min]	[Nm]
SLN-27-04	250	0.06	0.04	10	40	100	0.1
SLN-27-14	250	0.06	0.04	10	40	300	0.1
SLN-27-05	250	0.06	0.04	10	40	100	0.1
SLN-27-15	250	0.06	0.04	10	40	300	0.1

Part No.	A	Al	H	E1	E2	E3	E11[102]	l	hw	lt	lb	ts	tg	d2[98]	l2	ha
	±0.2	-0.1	±0.2	±0.15	±0.15	±0.15			±0.2	±0.2				4h9		
SLN-27-04	28	35	21.5	15	15	28	15	76	22	20.2	5	3.5	M3	5	15	14
SLN-27-14	28	35	21.5	15	15	28	15	76	22	20.2	5	3.5	M3	5	15	14
SLN-27-05	28	35	21.5	15	15	28	15	76	22	20.2	5	3.5	M3	5	15	14
SLN-27-15	28	35	21.5	15	15	28	15	76	22	20.2	5	3.5	M3	5	15	14

[101] Fixed stroke lengths for SLN option: 100/150/200/250 mm

[102] The dimension E11 can only be found in conjunction with the igus motor connection [98] Thread/ remaining thread visible

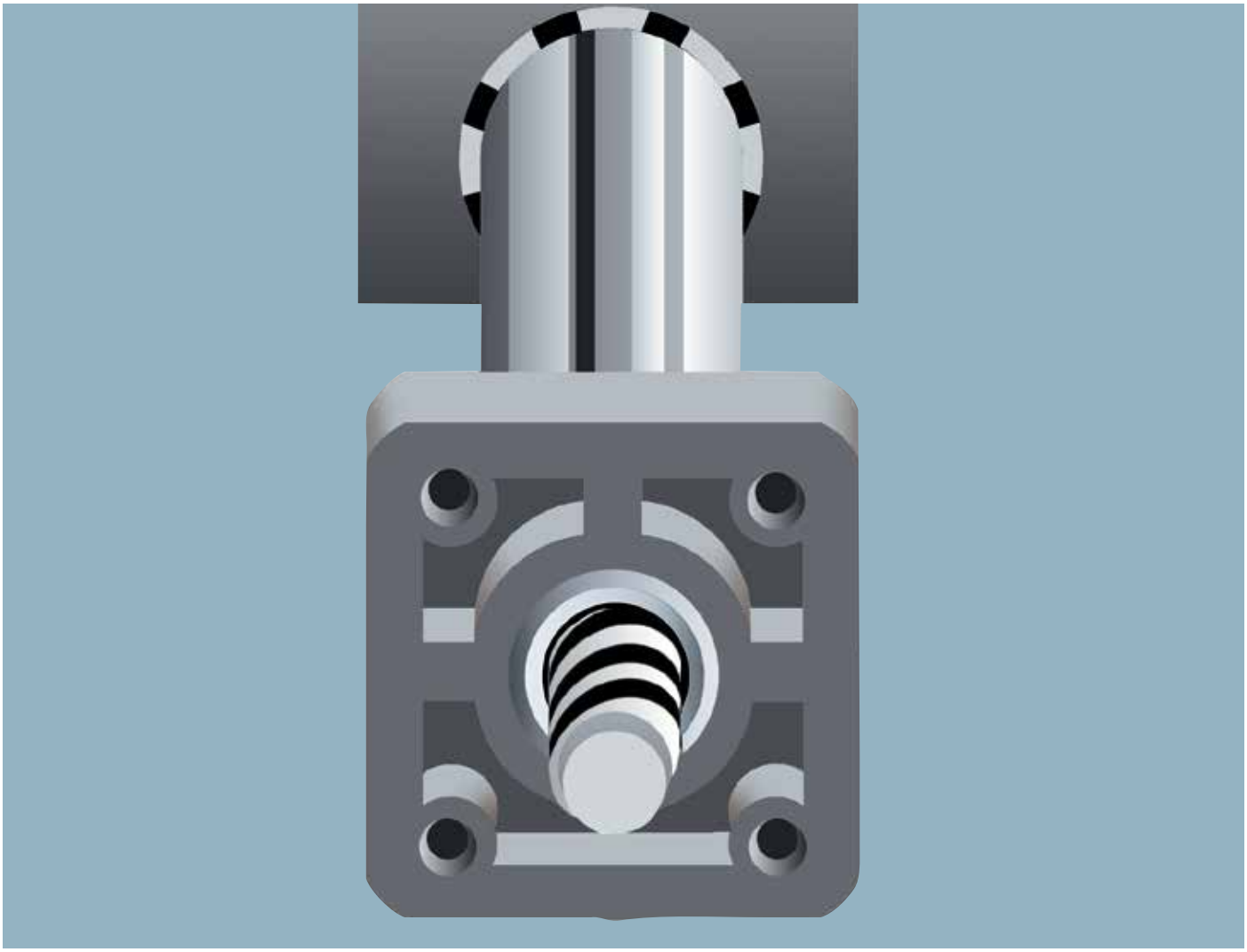

DryLin® General Drive Technology: SET Easy Tube

- No external lubrication required
- Corrosion resistant
- Low weight aluminum and stainless steel
- Temperature resistance up to 122°F (+50°C)
- Extensive accessories
- Simple, smooth design for hand-powered applications

DryLin® SET - Easy Tube

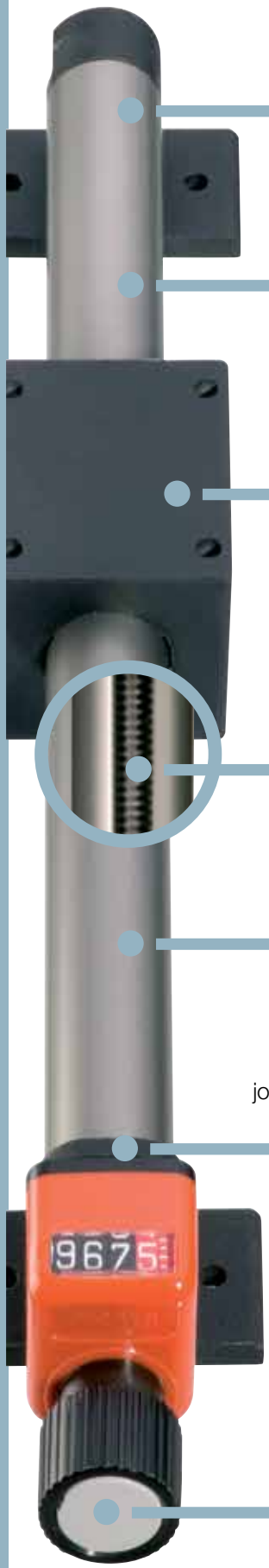

DryLin® SET

The DryLin® SET slide table range has a simple but solid design; the complete system only consists of a few components. The anodized aluminum tube guides the slide carriage and at the same time protects the lead screw. The carriage and the trapezoidal nut are manufactured from a high performance polymer bearing material. The system runs without any lubrication, and gives a low friction value combined with an excellent wear rate.

- Protected lead screw
- Effective design
- Available with measurement scale without lead screw
- Flanged version for axial mounting

Typical application areas

- Sensor and camera positioning
- Format adjustment

Online product finder
➤ www.igus.com/SHT-productfinder

Carriage lengths: 30-55 mm
Stroke lengths: up to 850 mm

Detailed technical data
➤ www.igus.com/DryLinSET

Available in 3-8 days
Detailed information about delivery time online.

DryLin® SET - Product range

Easy Tube

DryLin® SET Easy Tube for simple adjustments with an interior lead screw.

- 100% self-lubricating
- Corrosion-free stainless steel lead screw
- Laser marked scale
- Low weight
- Temperature resistant up to 140°F (+60°C)
- Available accessories ➤ **Page 1293**

Order key

SET-25-AWM

Shaft material
Dimension
Easy Tube

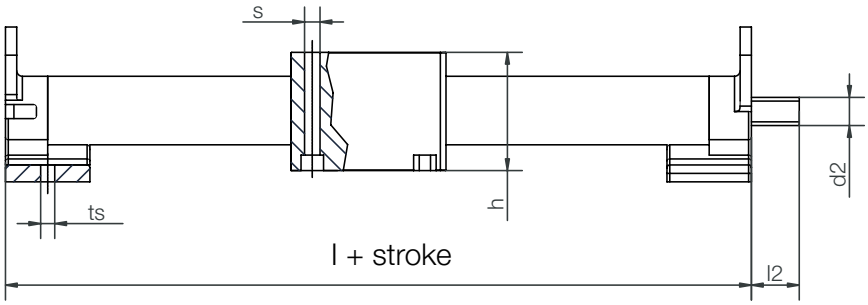

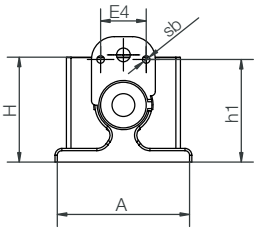

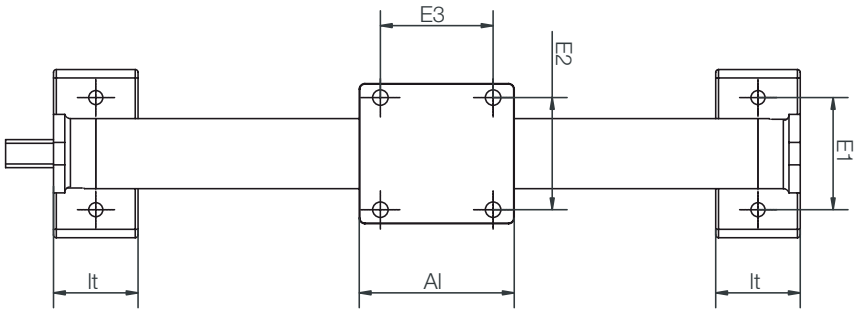

Technical data

Part No.	Max. stroke length	Aluminum shaft		Max. static load capacity	
		Weight shaft end supports and carriage	Additional (per 100 mm)	axial	radial
	[mm]	[kg]	[kg]	[N]	[N]
SET-12-AWM	200	0.05	0.03	10	20
SET-25-AWM	750	0.15	0.12	150	300
SET-30-AWM	850	0.20	0.21	200	400

Dimensions [mm]

Part No.	A	Al	H	E1	E2	E3	E4	l	h	h1	lt	ts	s	sb	l2	d2[92]
SET-12-AWM	30	30	23.5	20	20	20	–	60	22	–	15	3.3	4.2	–	10	M4
SET-25-AWM	60	55	44	40	40	40	20	115	39	45	30	5.2	5.2	M4	17	Tr10x2
SET-30-AWM	80	55	49	60	40	40	20	125	39	50	35	6.5	5.2	M4	20	Tr12x3

[92] Lead screw end unmachined

DryLin® SET - Product range

Easy Tube with flange

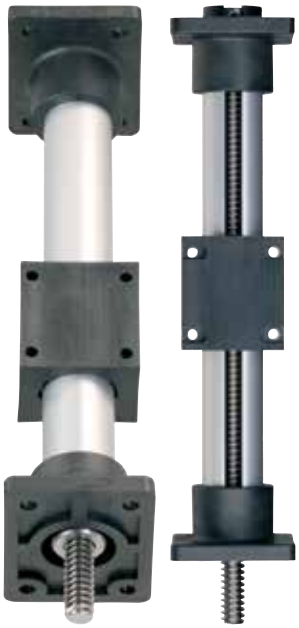

DryLin® SET Easy Tube flanged version for axial mounting.

- Self-lubricating
- Simple, smooth design
- Laser marked scale
- Available accessories ➤ **Page 1293**

Order key

SET-25-AWM-F

- With flange
- Shaft material
- Dimension
- Easy Tube

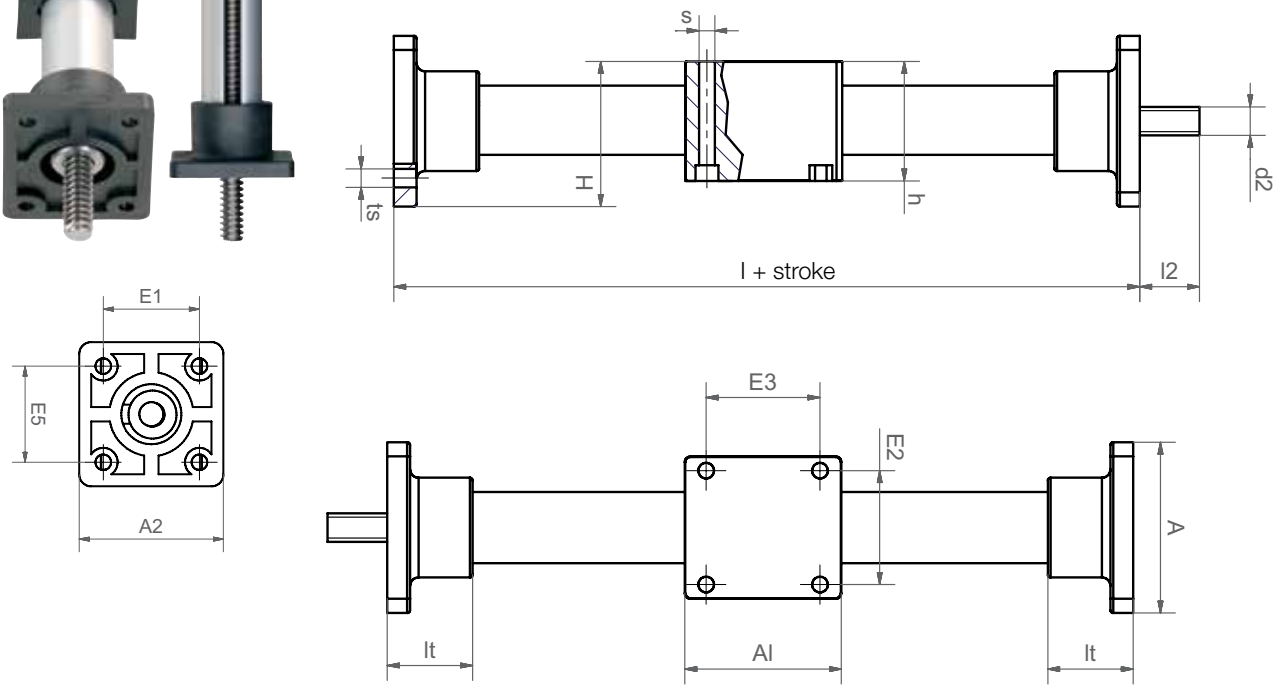

Technical data

Part No.	Max. stroke length	Aluminum shaft		Max. static load capacity	
		Weight shaft end supports and carriage	Additional (per 100 mm)	axial	radial
	[mm]	[kg]	[kg]	[N]	[N]
SET-25-AWM-F	750	0.15	0.12	150	300
SET-30-AWM-F	850	0.20	0.21	200	400

Dimensions [mm] – Flange version

Part No.	Al	A	A2	H	E1	E2	E3	E5	l	h	lt	ts	s	l2	d2[92)]
SET-25-AWM-F	55	60	60	49	40	40	40	40	115	39	30	5.2	5.2	27	Tr10x2
SET-30-AWM-F	55	60	80	59	60	40	40	40	125	39	35	6.5	5.2	30	Tr12x3

[92)] Lead screw end unmachined

DryLin® SET - Product range

Easy Tube with measurement scale

Order key

SETM-25-AWM-200-SC

- Scaling
- Stroke length
- Shaft material
- Dimension
- Manual without lead screw (optional)
- Easy Tube

DryLin® SET Easy Tube with laser marked scale.

- 100% self-lubricating
- Corrosion-resistant
- With hand clamp
- Available with/without lead screw
- 3 stroke lengths available from stock

Technical data

F radial	N	300
Max. extension at maximum load	mm	66
Max. extension at nominal load 100 N	mm	200
Max. drive force without load	N	10
Max. holding strength	N	100
Max. stroke length	mm	600

Dimensions [mm]

Part no. measurement scale without lead screw	Part no. measurement scale with trapezoidal lead screw 10 x 2	Stroke length [mm]
SETM-25-AWM-200-SC	SET-25-AWM-200-SC	200
SETM-25-AWM-400-SC	SET-25-AWM-400-SC	400
SETM-25-AWM-600-SC	SET-25-AWM-600-SC	600

More dimensions see SET ➤ Page 1287

DryLin® SET - Product range

Easy Tube end fixed

Single flange-mount. Ideal for the positioning adjustments of sensors and cameras.

- Easy assembly
- Flexible installation
- Space saving
- Self-lubricating protected lead screw

Order key

SETB-25-AWM

- Shaft material
- Dimension
- Easy Tube

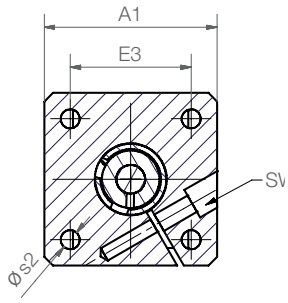

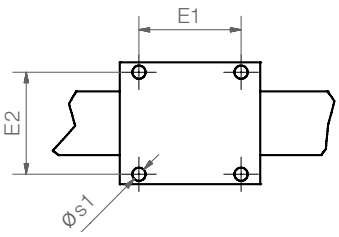

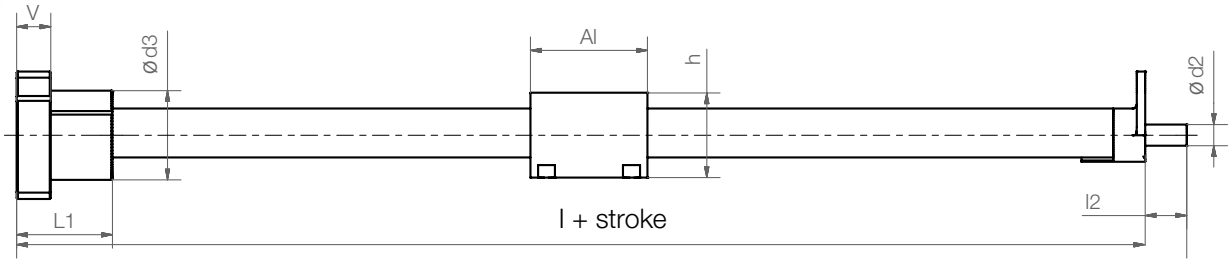

Technical data

Part No.	Max. stroke length	Max. static load capacity	
		axial	radial at arm
	[mm]	[N]	[N]
SETB-25-AWM	300	150	12.5

Dimensions [mm]

Part No.	A1	Al	h	E1	E2	E3	V	L1	l2	d2[92)]	d3	l	s1	s2	SW
SETB-25-AWM	60	55	39	40	40	42	16	45	17	Tr10x2	42	130	5.2	6.6	5

[92)] Lead screw end unmachined
More dimensions on request

DryLin® SET - Product range

Weight-optimized carriage option

- Reduce weight and costs
- Simplified solid assembly
- Light, clean and low noise

Order key

SETC-25-AWM

- Shaft material
- Dimension
- Easy Tube

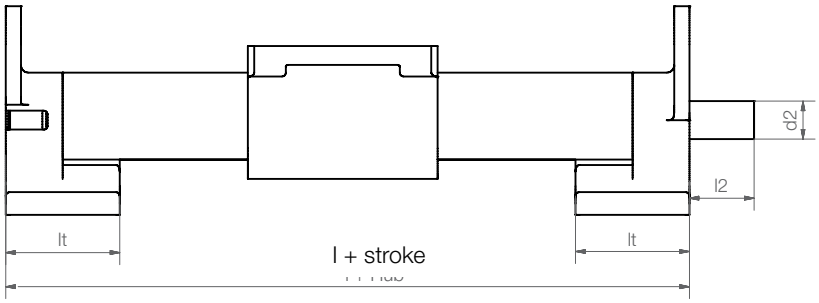

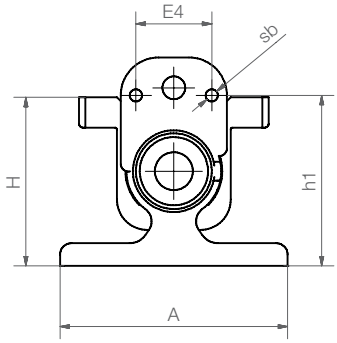

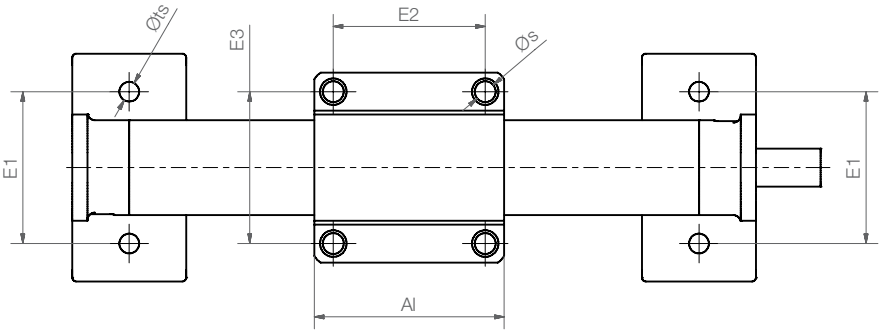

Technical data

Part No.	Weight	Max. stroke length	Max. static load capacity	
			axial	radial
	[kg]	[mm]	[N]	[N]
SETC-25-AWM	0.15	750	150	300

Dimensions [mm]

Part No.	A	Al	H	E1	E2	E3	E4	l	h1	lt	ts	s	sb	l2	d2[92)]
SETC-25-AWM	60	55	44	40	40	40	20	115	45	30	5.2	5.2	M4	17	Tr10x2

[92)] Lead screw end unmachined
More dimensions on request

Notes

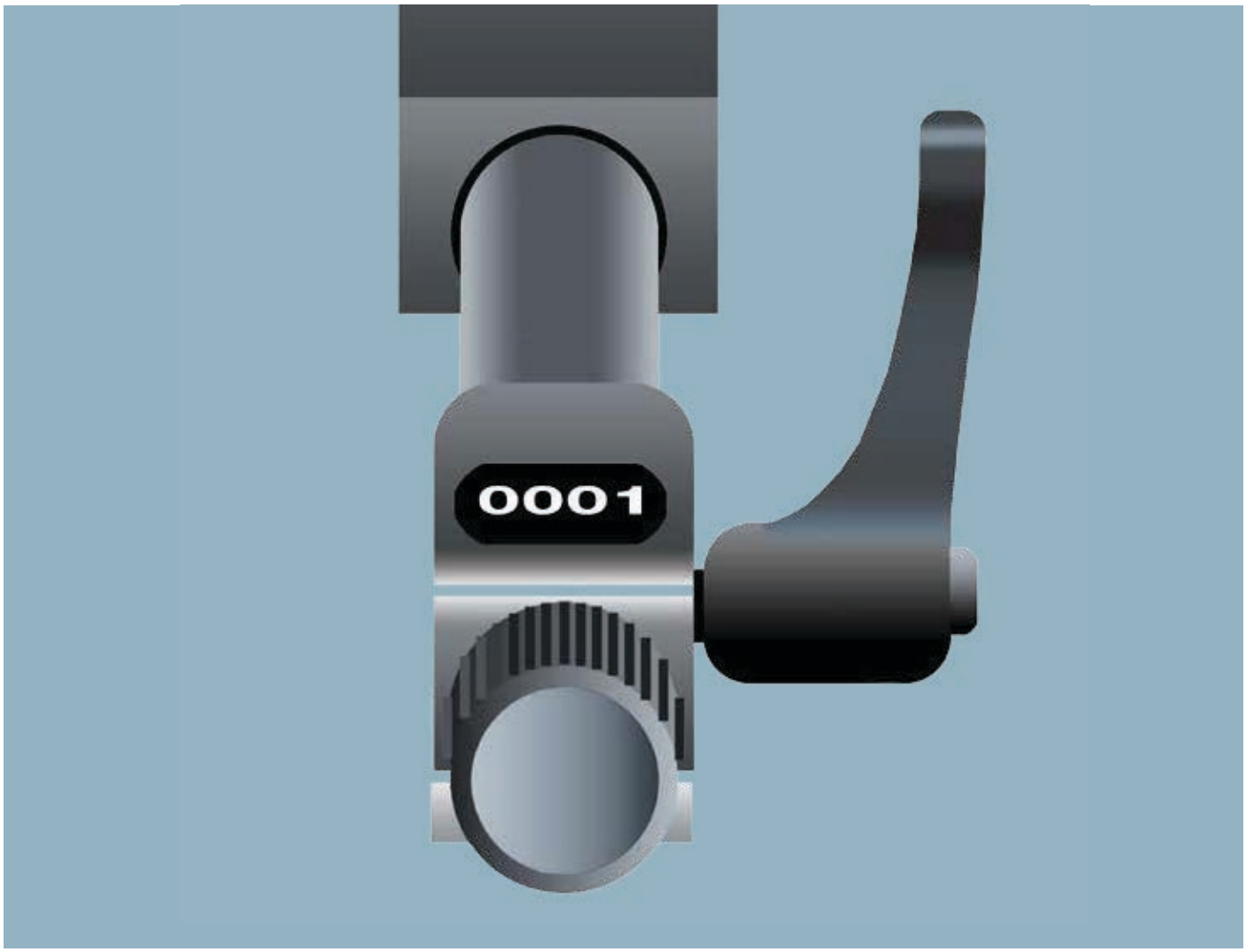

DryLin® Drive Technology: Accessories

- Positional indicators
- Hand wheels
- Lead screw clamps
- Angular drives

Accessories for DryLin® drive technology

An extensive list of accessories is available for many DryLin® drive units to perform manual adjustments quickly and conveniently. When directly configuring the linear unit with the order, the units are shipped completely assembled. Any subsequent reconfiguration may result in the lead screw having to be exchanged because the lead screw ends may be too short.

- Fast and precise positioning
- Ergonomic operation
- Provides a mechanical brake

Detailed technical data
➤ www.igus.com/DryLin-accessories

Available from stock
Detailed information about delivery time online.

Position indicator

- Direct read-out of the carriage position for the lead screw unit
- Enables repeatable set-ups

➤ Page 1296

Lead screw clamp

- For clamping of the lead screw
- Provides a mechanical brake to the lead screw
- Material: plastic housing with aluminum shaft clamp

➤ Page 1297

Hand wheel

- Defined standard for complete units
- Different outer-diameters available
- Different handles available

➤ Page 1297

V-drive

- 360° continuously adjustable angle
- Compact flange reduces physical footprint

➤ Page 1298

Adapter plate

- For manual orientation of position indicators and hand clamps
- Suitable for linear modules of HTS/SLW/HTSP series
- Material: plastic igumid G

➤ Page 1300

Angle kit

- For DryLin® HTS linear modules
- For 3-axis-systems XYZ
- Material: stainless steel
- 2 different sizes

➤ Page 1301

Flexshaft

- Optional offset operation of the DryLin® linear modules
- Controls can be positioned independently
- Available in length 300, 500 and 1,000 mm
- Can be combined with other accessories

➤ Page 1302

DryLin® Drive Technology - Accessories - Product range

Position indicator

To keep downtime to a minimum and make adjustments quickly and precisely, the position indicator is used to create repeatable set-ups. These can be shipped from stock for almost any linear unit in the matching pitch, in the required counting and viewing direction and in a variety of colors.

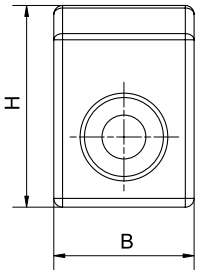

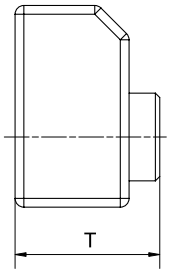

- Plastic analog indicator for adjustment and direct reading of slide position
- 3- (P1), 4- (P5) or 5- (P6) digit counter (red digit indicates tenths)
- Can be combined with hand clamps and hand wheels
- Reduction sleeves included

Order key

HTS-P3-A-2-DX-O

- Housing color
  - O = Orange (standard)
- Direction of rotation
  - DX = clockwise
  - SX = anti clockwise
- Pitch
- Display orientation
- Type
- Standard

Installation options

0 degrees

90 degrees

180 degrees

270 degrees

Display orientation

A*
* Standard

B
(optional)
for vertical fitting position:
display turned 180°

Dimensions [mm]

Pitch	for lead screw	Display after 1 rotation	Type
1.25	M8x1.25	001.25	P1[103)]
1.5	Tr8x1.5	001.5	P1[103)]
2	Tr10x2	002.0	P3[103)]
3	Tr10x3; Tr12x3	003.0	P3[103)]
4	Tr18x4; Tr14x4	004.0	P3[103)]
5	Tr24x5	005.0	P3[103)]
5	Tr26x5	005.0	P6[103)]
6	Tr30x6	006.0	P6[103)]
12	10x12	012.0	P3[103)]
15	8x15	015.0	P1[103)]
50	10x50	005.0	P3[103)]
100	18x100	001.0	P3[103)]

The pitch depends on the lead screw used.
[103)] P1: 3-digit, P3: 4-digit, P6: 5-digit

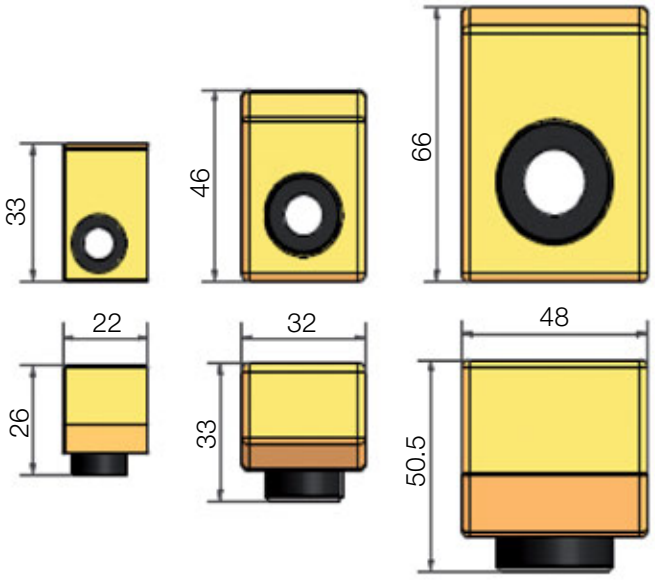

P1
SLW-0630
HTSP-01-06

P3
all other
linear tables

P6
HTSC-40
HTSC-50

DryLin® Drive Technology - Accessories - Product range

Lead screw clamp

Linear modules with trapezoidal threads are equipped with a self locking (non-backdriveable) mechanism. Many applications call for an additional clamping option as an additional safeguard against unintentional movement.

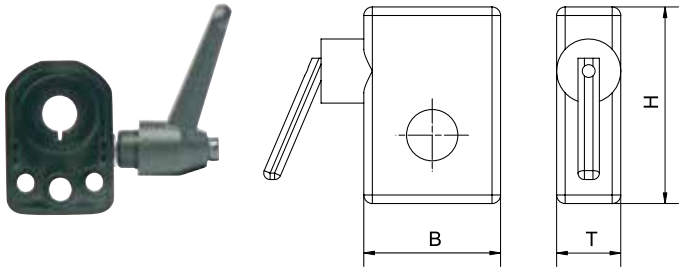

- Shaft clamping flange for attachment to the position indicator and subsequent mounting on the lead screw
- Provides a mechanical brake to the lead screw
- Material: plastic housing with aluminum shaft clamp
- Color: black

Dimensions [mm]

Part No.	HTS-HK-12	HTS-HK-16	HTS-HK-20	HTS-HK-30
Lead screw size	10	14	18	24
Dimensions (B x H x T)	32 x 46 x 15	32 x 46 x 15	32 x 46 x 15	32 x 46 x 15

Hand wheel

We have an extensive selection of hand-wheels available to ship from stock for the most varied requirements. These range from small compact sizes up to ø 125 with/without handle, and in various configurations.

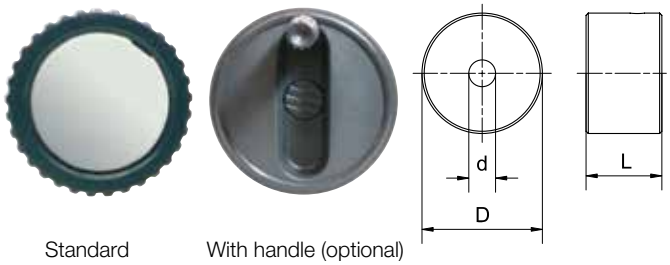

Standard With handle (optional)

- Rotary knob: defined standard for complete units
- Different outer-diameters available
- Different handles available

Order key

HTS-HR-8-27-17-OG

- Handle (optional)
  - OG = without handle
  - FG = fixed handle
  - UG = folding handle
  - SG = security handle
- Length
- Outer diameter
- Inner diameter
- Hand wheel
- Standard

Dimensions [mm]

d	D	L	OG	FG	UG	SG[104)]
4	22	15	●			
5	22	15	●			
8	27	17	●	–	–	–
10	27	17	●	–	–	–
12	42	23	●	–	–	–
14	42	23	●	–	–	–
6	50	52	–	●	–	–
8	80	75	–	●	●	●

d	D	L	OG	FG	UG	SG[104)]
10	80	75	–	●	●	●
12	80	75	–	●	●	●
12	125	109	–	●	●	●
14	125	109	–	●	●	●
16	125	109	–	●	●	●
20	198	141	–	●	–	–

[104)] **The automatic panning will return on release**

DryLin® Drive Technology - Accessories - Product range

V-drive

In addition to safety technology aspects, limited operating space requires DryLin® drives to be operated with flexibility and ease. We provide a product line of continuously adjustable angular drives for adjustment options from a defined direction. For manual adjustments, the angular drives can also be configured with position indicator, clamp and hand-wheel, and are shipped pre-assembled. Angular drives with keyed/grooved shafts are available for motor interfaces with increased torque transfers.

V-drives WT-3

**** Angular drive with hand-wheel (HR), cursor (PA) and lead screw clamp (HK) – optional accessories**

- Flexible adjusting to your installation parameters with continuously variable adjustment (can be oscillated 360°)
- Max. drive torque 3 Nm
- Clamping using set screw
- Ø 12 mm h7 output shaft
- Compatible with DryLin® linear modules HTS/HTSC (sizes 12 and 20) and SLW-1040, - 1660 and - 2080
- HTS-30 on request
- Position indicator, lead screw clamp, hand wheel available

➤ Page 1296

Depending on the design, an adapter plate is used for connection to the linear system

Order key

WT-3100

Options
00 without
10 HR**
20 PA**
30 PA-HR**
40 HK**
50 HK-HR**
60 HK-PA**
70 HK-PA-HR**

Ready for use with DryLin® linear slide table
0: HTS-/HTSC-12
1: HTS-/HTSC-20
2: HTS-30
5: SLW-1040/-1080
6: SLW-1660
7: SLW-2080

V-drive type
1: WT1
3: WT3
4: WT4

V-drive

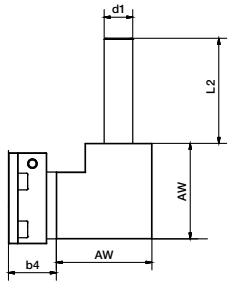

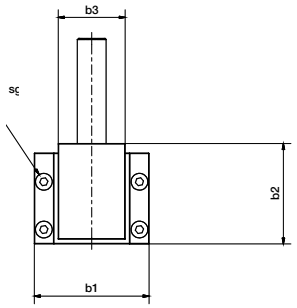

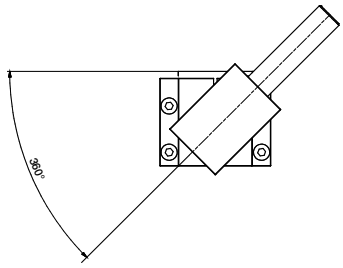

Dimensions [mm]

Part No.	i[105)]	AW	b1	b2	b3	b4	L2	d1	sg
WT-3000 | 3100 | 3500	1:1	40	48	42	28	20	26	12	M4
WT-3600 | 3700	1:1	40	48	42	28	30	26	12	M4

[105)] Gear ratio

DryLin® Drive Technology - Accessories - Product range

Heavy Duty V-drive WT-4

DryLin® angular drives provide for a maximum of positioning flexibility. The form fitting connection can give a maximum torque of up to 6 Nm.

- Flexible adjusting to your installation scenario with continuously variable adjustment (can be oscillated 360°)
- Max. drive torque 6 Nm through coupling
- Fixed using feather key groove
- Base shaft Ø 14 mm h7 with size
- Compatible with DryLin® HTS/HTSC/SLW (sizes 16, 20 and 30)
- Position indicator, lead screw clamp, hand wheel available

➤ **Page 1296**

Dimensions [mm]

Part No.	i[105]	AW	b1	b2	b3	b4	L2	d1	sg
WT-4000 | 4100 | 4200 | 4700	1:1	60	52	51	48	23	26	14	M4
WT-4600	1:1	60	52	51	48	33	26	14	M4

[105] Gear ratio

Hygienic-Design V-drive WT-1

Angular drive with hand wheel (optional)

Following the idea of "Hygienic Design" the V-drive is available as maintenance free and washable stainless steel/ polymer system.

- Self-lubricating
- Maximum drive torque 3 Nm
- Single parts made from stainless steel
- Easy to clean with water
- Compatible with DryLin® HTSC-20-EWM-HYD

➤ **Page 1257**

- Position indicator, lead screw clamp, hand wheel available

➤ **Page 1296**

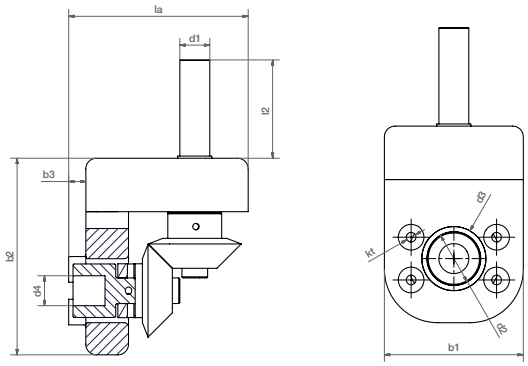

Dimension [mm]

Part No.	i[105]	la	kt	b1	b2	b3	d4	l2	d1	d2	d3	sg
WT-1100	1:1	84	4.5	65	92	8	8	26	14	25	30	M4

[105] Gear ratio

DryLin® Drive Technology - Accessories - Product range

Adapter plate

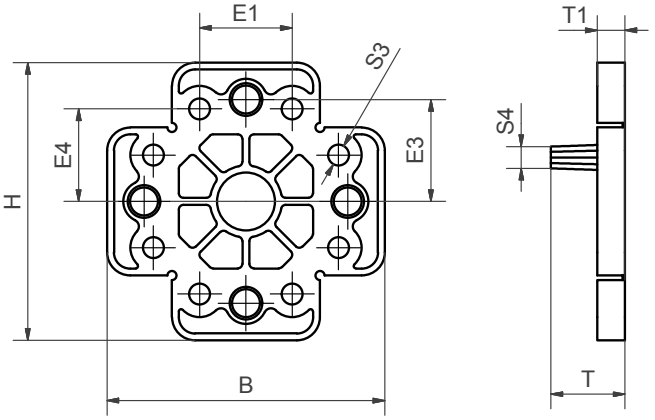

- Adapter plate for manual orientation of position indicators and hand clamps
- Suitable for DryLin® linear modules of SLW/HTS/HTSP series (see table)
- Material: plastic

Installation note: Not used sections can be easily separated.

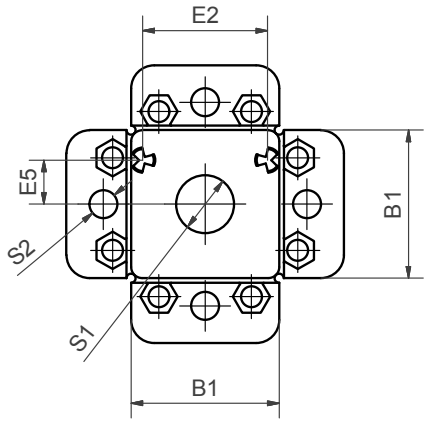

Part No.	suitable for
STZ-063001	SLW-0630/HTSP-06
STZ-104001	SLW-1040/HTS-12 HTS-20, HTSP-01/02-12
STZ-166001	SLW-1660
STZ-208001	SLW-2080
STZ-302403	HTS-30

Dimensions [mm]

Part No.	H	B	B1	T	T1	E1	E2	E3	E4	E5	S1	S2	S3	S4
STZ-063001	48	48	18	8	5	-	14.4/11[106)]	18	-	7.2/5.5	8.5	6	-	ø1.5
STZ-104001	60	60	32	16	6	20	27	22	20	9.5	12.5	6	4.5	M6
STZ-166001	60	71	32	20	6	20	58	22	20	4.5	14.5	6	4.5	ø11
STZ-208001	60	71	32	16	6	20	58	22	20	13	14.5	6	4.5	M10
STZ-302403	60	60	32	16	6	20	27	22	20	9.5	14.5	6	4.5	M6

[106)] Adapter plate with 8 pins

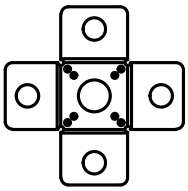

DryLin® Drive Technology - Accessories - Product range

Stainless steel angle kit, XZ-axis

Order key

HTS-WS-12

Dimension
Angle kit
Standard

DryLin® HTS-WS is an angle kit for the HTS linear modules series. Stainless steel angle brackets make any combination possible.

- 2 different sizes
- Can be combined with all DryLin® linear modules series HTS/HTSC/HTSS in the dimensions 12 and 20

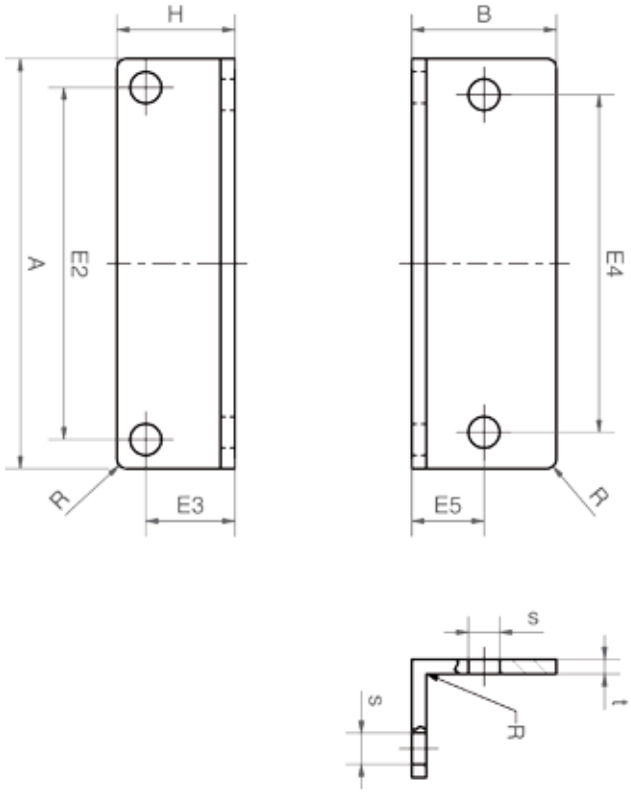

Dimensions [mm]

Part No.	A	H	B	E2	E3	E4	E5	s	t
HTS-WS-12	85	26.5	30	73	20.5	70	15	6.5	3
HTS-WS-20	130	36	35	108	18	115	35	8.5	5

DryLin® Drive Technology - Accessories - Product range

Flexshaft

The flexshaft enables the positioning of the hand wheel independent of the installation position of the linear unit. Distance of 500 mm and offset by 85° No problem!

- Lengths: 300 mm, 500 mm and 1000 mm (flexible area)
- Flexible shaft: burnished steel
- Plastic coating: Rilsan
- Connection piece: stainless steel 1.4305
- For all journal diameters (10, 12 and 14 mm)
- Flexible installation
- Space saving
- Can be combined with a bearing block ➤ **Page 1222**
- Position indicator, lead screw clamp, hand wheel available ➤ **Page 1296**

Example of the function of an offset operating unit

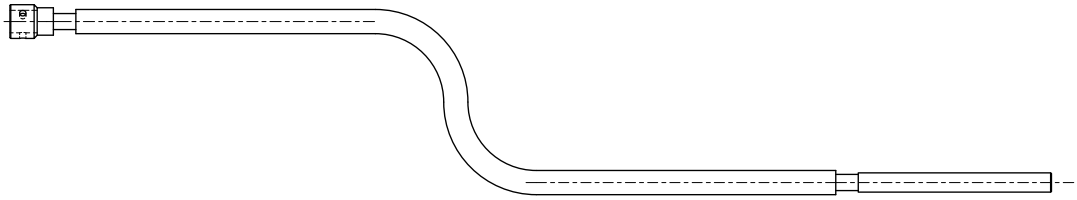

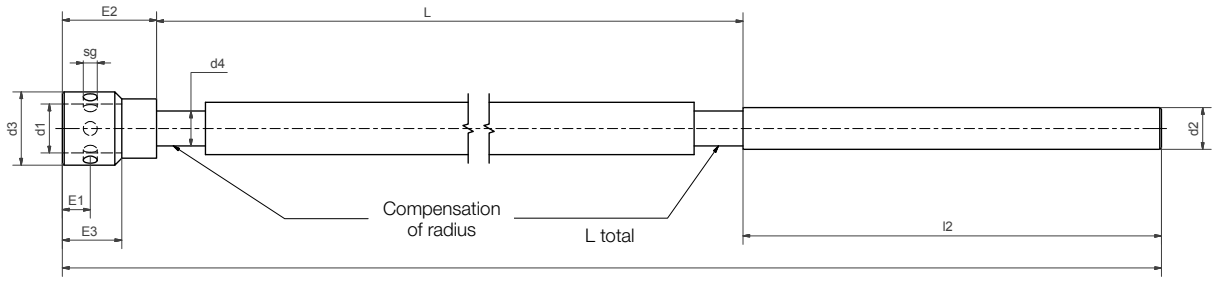

Dimensions [mm]

Part No.	d1	d2	d3	d4	l2	sg	E1	E2	E3	L	L total	n max.	T max. [Nm]	min. Bending radius
FS-06-500-Z12X120-AA	14H7	12h7	21	6	120	M4	8.5	36.5	14.5	500	657	1,000	3	70
FS-08-1000-Z12X120-AA	14H7	12h7	21	8	120	M4	8.5	36.5	14.5	1,000	1,157	1,000	4.5	90

More dimensions on request

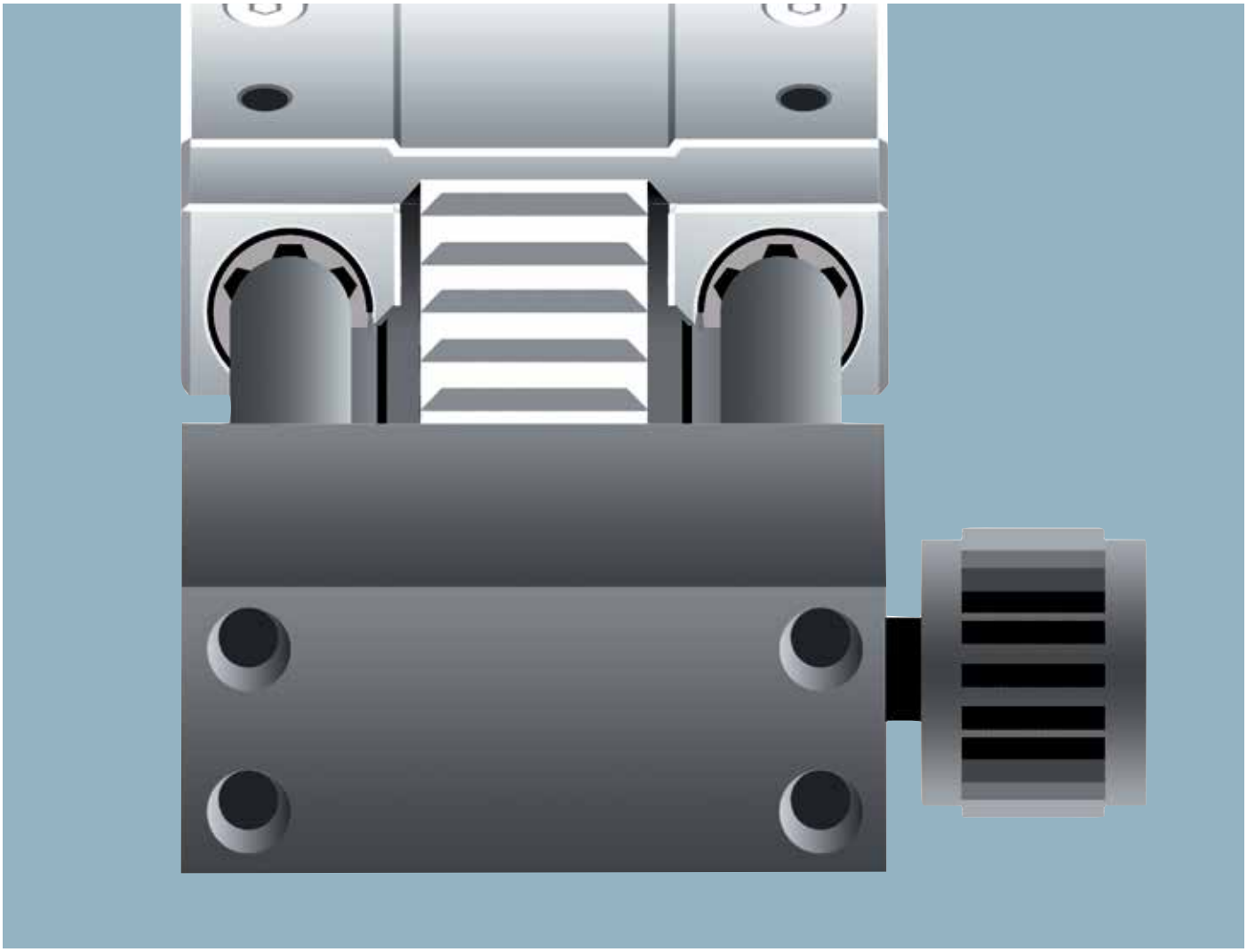

DryLin® General Drive Technology: toothed belt axes ZLW

- Maintenance-free
- Plain bearing guide
- Fast positioning
- Ball bearing support block bearings
- Self-lubricating linear guide

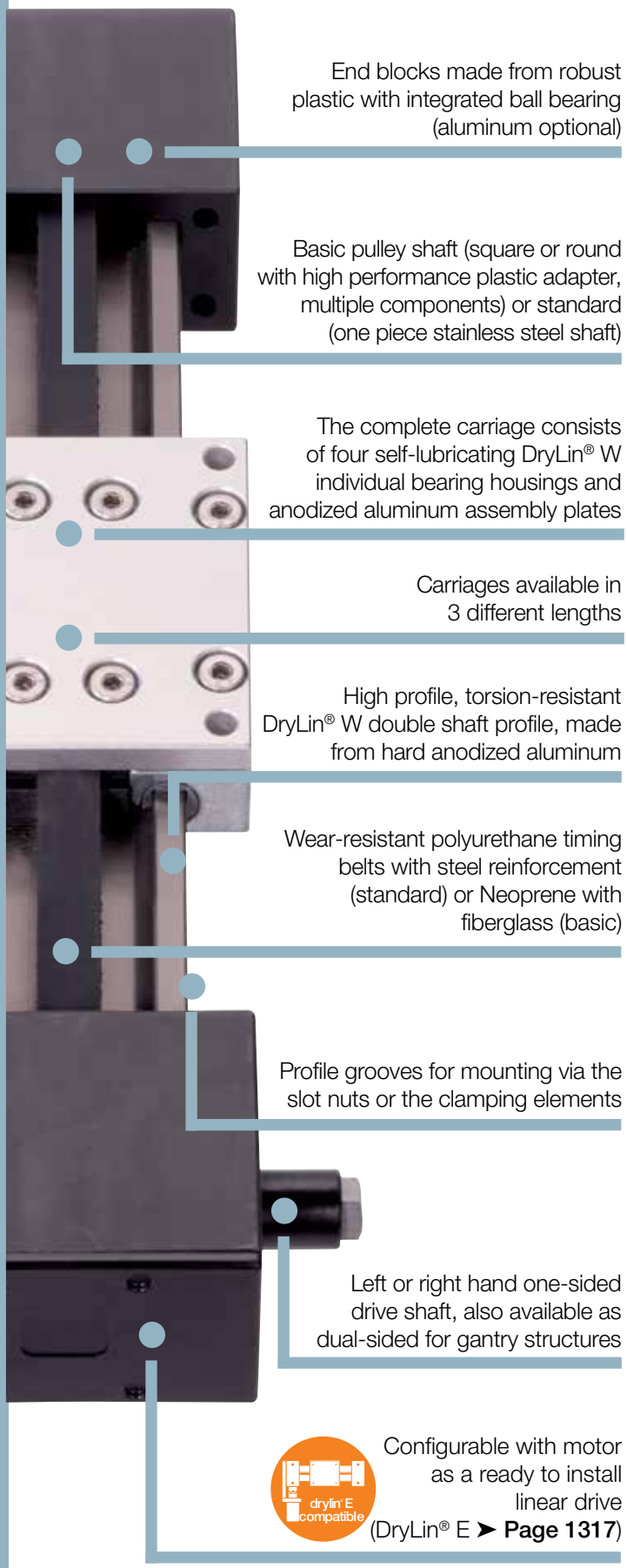

Toothed belt axes – DryLin® ZLW

The DryLin® toothed belt axes in the ZLW series are suitable for many different positioning and adjustment tasks. The lubrication free DryLin® W profile guide acts as a linear guide and a toothed belt acts as a drive. Thanks to the lightweight design using plastic and aluminum, DryLin® ZLW toothed belt axes have a low mass inertia, making them highly efficient. Whether as an individual system or a gantry structure, the ZLW series offers the ideal solution in both confined spaces and applications that require a high level of rigidity . All DryLin® ZLW toothed belt axes can be ordered ready for connection and configured with DryLin® E stepper and DC motors. It is also possible to integrate other motor components.

- Completely lubrication free operation
- 3 types: eco/basic/standard
- Variable carriage lengths
- Multiple motor kits available

Typical application areas

- Medical and laboratory technology
- Handling ● Positioning tasks (pick & place)
- Camera/sensor adjustment ● Machine construction

Online product finder
➤ www.igus.com/SHT-productfinder

Carriage lengths: 60 - 250 mm
Carriage widths: 54 - 107 mm
Stroke lengths: up to 3,000 mm

Detailed technical data
➤ www.igus.com/DryLinZLW

Available in 3-8 days
Detailed information about delivery time online.

DryLin® ZLW - Toothed belt axes

ZLW-0630 – Belt drive axis

- For easy adjustment and positioning functions
- Good for low space requirement, installation height: 31 mm
- Stroke lengths variable (max. 1,000 mm)
- Type series "Basic 02", "Standard 02" and "Eco"

➤ **Page 1310**

ZLW-1040 – Belt drive axis

- For many positioning functions
- Installation height: 45 mm
- Stroke lengths variable (max. 2,000 mm)
- Carriages in three lengths available

➤ **Page 1310**

ZLW-1080 – Belt drive axis

- Wide profile for high torque support
- Optimized for portal structures
- Installation height 45 mm
- Stroke lengths variable (max. 2,000 mm)

➤ **Page 1310**

ZLW-1660 – Belt drive axis

- For adjustment and positioning functions of axial loads up to 500 N
- Installation height: 72 mm
- Stroke lengths variable (max. 3,000 mm)
- Type series "Standard 02"

➤ **Page 1310**

Opposite belt drive axis – ZLW-OD

- For quick reverse positioning
- Fast right/left adjustment
- Compact and light
- Self-lubricating

➤ **Page 1312**

Cantilever axis – ZAW

- Drive unit fixed, only profile and load are moved
- Hard-anodized aluminum axis profile
- Lightweight

➤ **Page 1314**

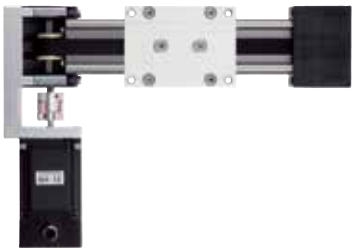

DryLin® E – Belt drive axis with motor

- Maintenance-free and self-lubricating
- Ready to install with motor, cable and initiator
- 3 installation sizes

➤ **Page 1317**

DryLin® ZLW - Toothed belt axes

Basic series

"Basic" is the designation of the low-priced option of the toothed belt axis. A black neoprene belt with glass fiber reinforcement is used. The toothed belt is supported at each end by a square stainless steel and polymer drive shaft running in two deep grooved ball bearings.

Standard series

The lubrication free linear guide is also driven by a toothed belt made from steel reinforced polyurethane (white). Deflection shaft and drive pulley – single-piece – are made from plated steel or stainless steel. The pulley shafts are mounted in two deep grooved ball bearings.

Technical data ZLW-0630

	Weight	Weight	max. Length of stroke[107]	Transmission	Tooth profile	Belt drive		
	without stroke [kg]	100 mm stroke [kg]	[mm]	[mm/rev]		-material	-width [mm]	-tension [N]
Basic 02	0.38	0.08	1,000	54	HTD 3M	Neoprene with GF	9	75
Standard 02	0.43	0.08	1,000	54	MTD3	PU with steel	9	100

	Max. radial stress	Guide bearing	Max. speed	Max. position accuracy[108]
	[N]		[m/s]	[mm]
Basic 02	100	Ball bearing	2	±0.35
Standard 02	150	Ball bearing	2	±0.3

Technical Data ZLW-1040/1080

	Weight	Weight	max. Length of stroke[107]	Transmission	Tooth profile	Belt drive		
	without stroke [kg]	100 mm stroke [kg]	[mm]	[mm/rev]		-material	-width [mm]	-tension [N]
Basic 02	0.9	0.14	2,000	66	RPP 3M	Neoprene with GF	15	150
Standard 02 (1040)	1.0	0.14	2,000	70	AT5	PU with steel	16	200
Standard 02 (1080)	1.3	0.2	2,000	70	AT5	PU with steel	16	200

	Max. radial stress	Guide bearing	Max. speed	Max. position accuracy[108]
	[N]		[m/s]	[mm]
Basic 02	200	Ball bearing	3	±0.3
Standard 02 (1040/1080)	300	Ball bearing	5	±0.2

Technical data ZLW-1660

	Weight	Weight	max. Length of stroke[107]	Transmission	Tooth profile	Belt drive		
	without stroke [kg]	100 mm stroke [kg]	[mm]	[mm/rev]		-material	-width [mm]	-tension [N]
Standard 02	4.0	0.5	3,000	120	AT5	PU with steel	32	500

	Max. radial stress	Guide bearing	Max. speed	Max. position accuracy[108]
	[N]		[m/s]	[mm]
Standard 02	2,000	Ball bearing	5	±0.2

[107] Longer stroke lengths on request after technical consultation and review
[108] These values were measured with maximum load in horizontal orientation

DryLin® ZLW-0630 - Technical data

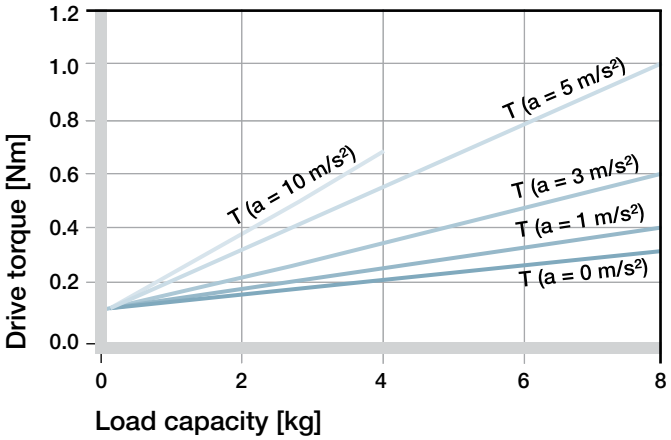

Diagram 01: Required drive torque*; horizontal orientation– ZLW-0630, Version basic 02

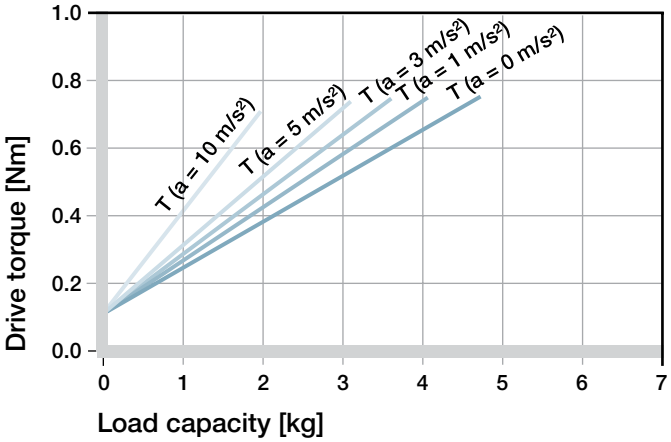

Diagram 02: Required drive torque*; vertical orientation – ZLW-0630, Version basic 02

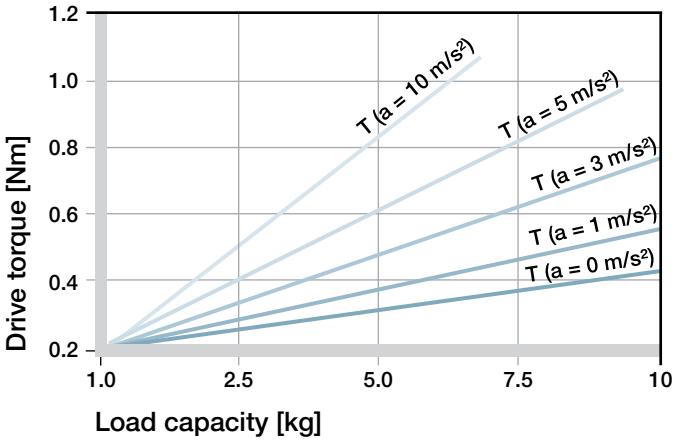

Diagram 03: Required drive torque*; horizontal orientation – ZLW-0630, Version standard 02

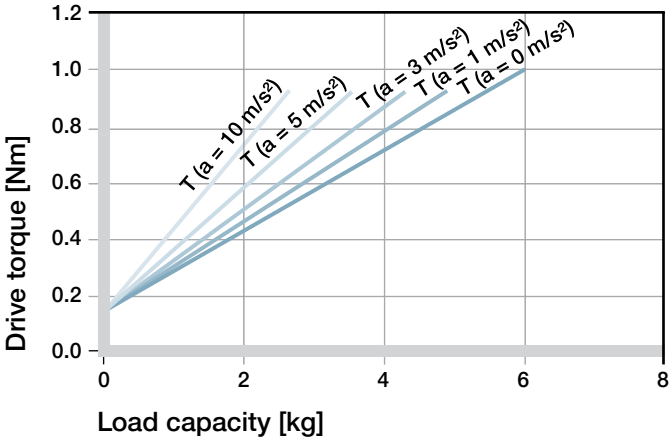

Diagram 04: Required drive torque*; vertical orientation – ZLW-0630, Version standard 02

* Assumption: the moving mass is located in a circumscribed circle with a Max. R = 100 mm to the middle of the guiding rail, max. permissible torque ZLW-0630 Basic 02: 0.75 nm, a = 0 m/s² , ZLW-0630 Standard 02: 1 nm, a = 0 m/s², constant drive without nominal acceleration value

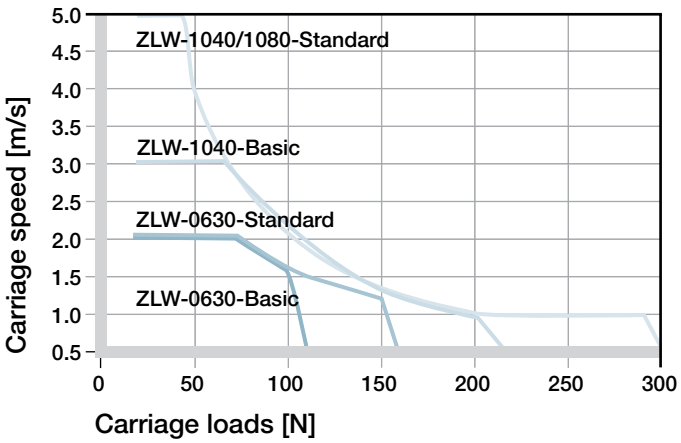

Diagram 05: Maximum load compared: ZLW-0630 and ZLW-1040/1080, 100 % OT (On-time). The diagram accounts for the sum of all forces active on the carriage.

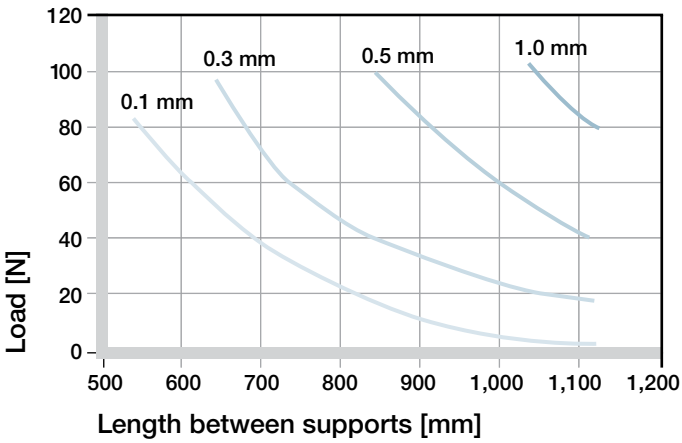

Diagram 06: Sag between unsupported end blocks ZLW-0630, Version basic 02 and standard 02. Sag permissible up to 2 mm maximum.

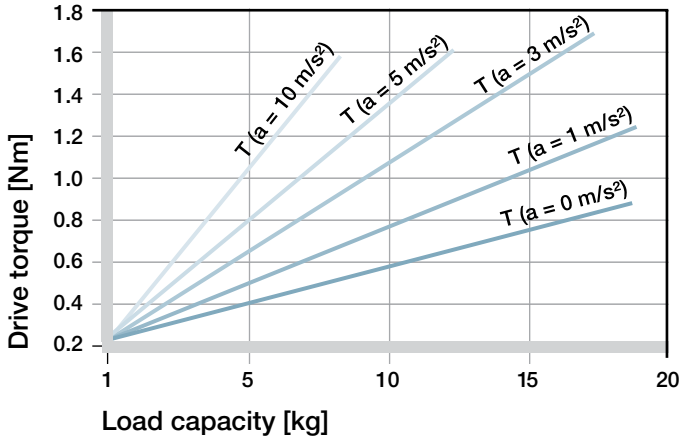

Diagram 07: Required drive torque*; horizontal orientation– ZLW-1040, Version basic 02

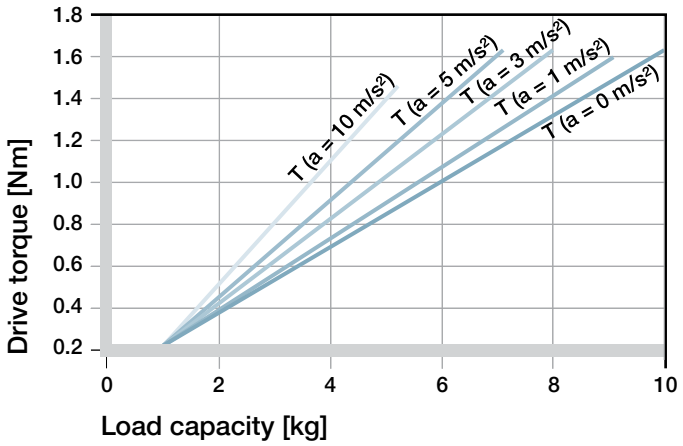

Diagram 08: Required drive torque*; vertical orientation – ZLW-1040, Version basic 02

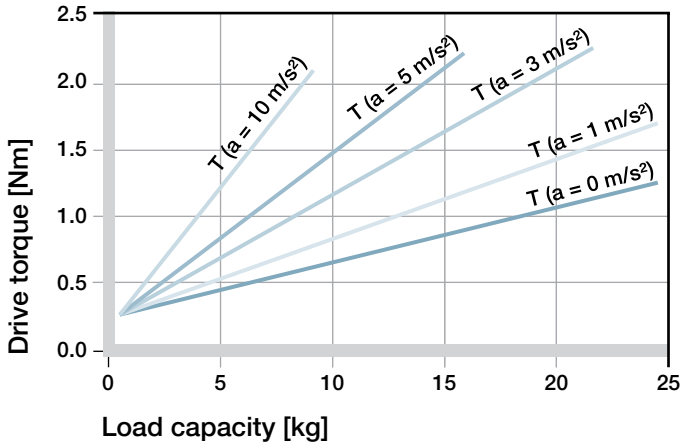

Diagram 09: Required drive torque*; horizontal orientation– ZLW-1040/1080, Version standard 02

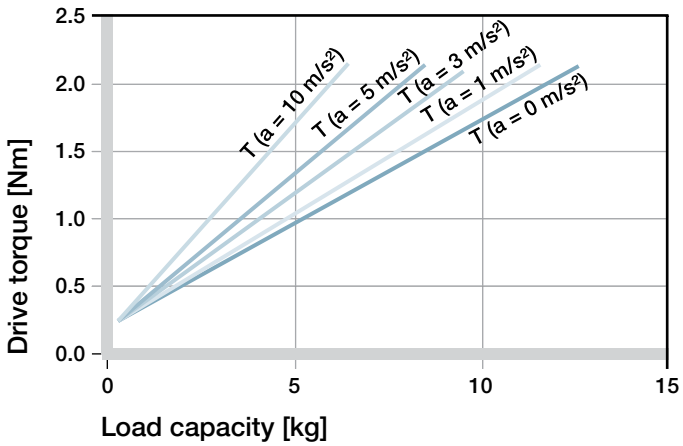

Diagram 10: Required drive torque*; vertical orientation – ZLW-1040/1080, Version standard 02

* Assumption: the moving mass is located in a circumscribed circle with a Max. R = 100 mm to the middle of the guiding rail, max. permissible torque ZLW--1040/1080 Basic 02: 1.75 nm, a = 0 m/s² , ZLW--1040/1080 Standard 02: 2.4 nm, a = 0 m/s², constant drive without nominal acceleration value

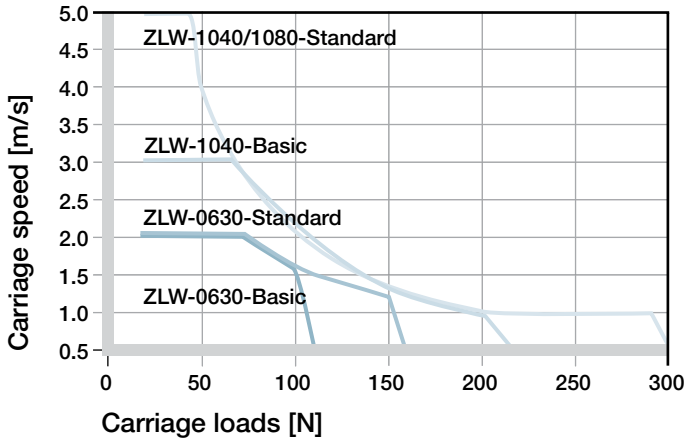

Diagram 11: Maximum load compared: ZLW-0630 and ZLW-1040/1080, 100 % OT (On-time). The diagram accounts for the sum of all forces active on the carriage.

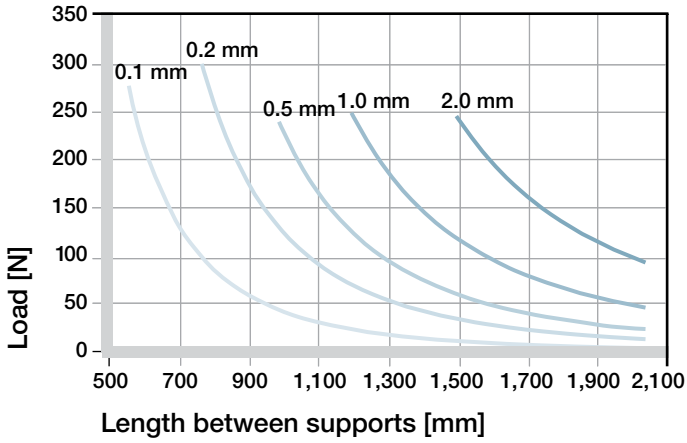

Diagram 12: Sag between unsupported end blocks ZLW-1040, Version Basic and ZLW-1040/1080 Version Standard 02. Sag permissible up to 2 mm maximum, horizontal orientation

Notes

DryLin® ZLW - Product range

ZLW-0630 – Belt drive axis

The DryLin® ZLW-0630 toothed belt axis is the ideal solution for easy adjustment and positioning tasks in confined spaces. The installation height is only 31 mm. The stroke length is variable (maximum 1,000 mm). DryLin® ZLW-0630 is available in the "Basic 02" and "Standard 02" type series.

ZLW-0630 Eco – Belt drive axis

Many infeed movements require cost-effective linear axes that focus on pure adustment tasks. This eco series with toothed belt was developed for the fast positioning of light loads. By the compact design and low weight due to aluminum and plastic, the ZLW eco is the perfect alternative to self-made solutions.

ZLW-1040 – Belt drive axis

The DryLin® ZLW-1040 toothed belt axis is the ideal solution for many positioning tasks. The installation height is only 45 mm. The stroke length can be freely selected (maximum 2,000 mm). The carriage is available in three lengths. DryLin® ZLW-1040 is available in the "Basic 02" and "Standard 02" type series.

ZLW-1080 – Belt drive axis

The broad profile of the DryLin® timing belt axis ZLW-1080 is characterized by a high torque support. In this way, the axis is suited for gantry structures, lateral mounts, as well as for applications with off-center center of gravity. The DryLin® ZLW-1080 is the standard version 02 with carriages in three lengths.

ZLW-1660 – Belt drive axis

The DryLin® ZLW-1660 toothed belt axis is the ideal solution for many adjustment and positioning tasks and adds a further size to the DryLin® ZLM toothed belt axis range. The stroke length can be freely selected (maximum 3,000 mm). DryLin® ZLW is available in the "Standard 02" series.

Order key complete ➤ Page 1316

drylin E compatible

Available as a motorized version DryLin® E ➤ **Page 1317**

DryLin® ZLW - Product range

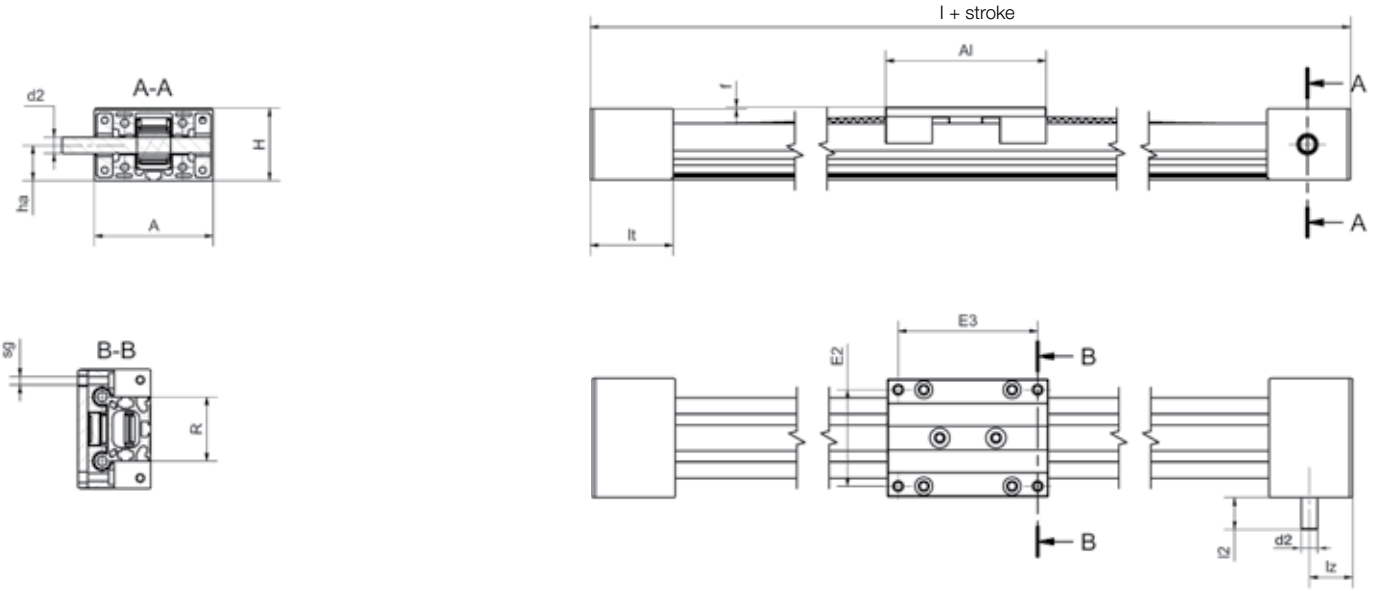

Connecting dimensions

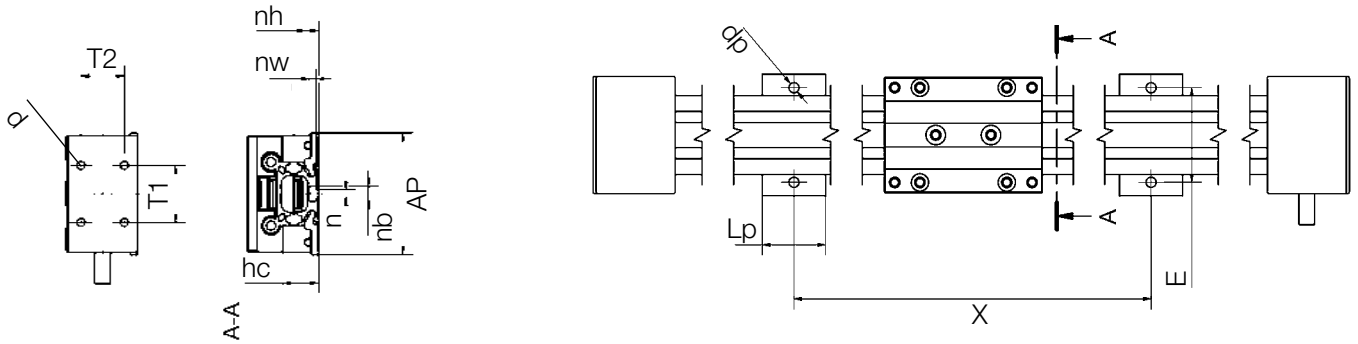

Dimensions [mm]

Part No.	A	Al	H	E2	E3	l	R	f	lt	sg	ha	hc	lz	l2	d2
	–0.3			±0.15	±0.15		±0.15		±0.3						h9
ZLW-0630-02-…[109)]	54	60	31	45	51	144	30	3	42	M4	14	22.5	20	20	8
ZLW-0630-02-E-60-L...	54	60	31	45	51	144	30	3	42	M4	14	22.5	20	20	8
ZLW-1040-02-…	74	100	44	60	87	204	40	1	52	M6	22	22.5	24	20	10
ZLW-1080-02-…	90	100	44	94	87	204	74	1	52	M6	22	22.5	24	12	10
ZLW-1660-02-...	104	100	72	86	82	252	60	2	76	M8	43	22.5	38	20	14

Connecting dimensions [mm]

Part No.	X	E	AP	Lp	dp	n	nb	nw	nh	T1	T2	d
		±0.2	–1.0							±0.25	±0.25	
ZLW-0630-02-…[109)]	variable	40	52	15	5.5	-	-	-	7	20	21	3.2
ZLW-0630-02-E-60-L...	variable	40	52	15	5.5	-	-	-	7	20	21	3.2
ZLW-1040-02-…	variable	60	78	40	6.4	5.2	9.5	4.3	15.5	36	26.5	5.0
ZLW-1080-02-…	variable	94	111	40	6.4	5.2	9.5	4.36	15.5	36	27	M6
ZLW-1660-02-...	variable	100	122	40	9	10	15.4	13	27.6	65	60	M5

[109)] **Basic version: 6 mm square, plastic adapter for pin diameter 10 mm included**

DryLin® ZLW - Product range

ZLW-OD – Opposite

- Quick reverse positioning
- Fast right/left adjustment
- Compact and light
- Motor flange for NEMA23 available from stock
- Available as standard and basic versions
- Incl. Angle flange for fixing
- Max. stroke lengths: 1,000 mm (0630), 1,500 mm (1040)
- Max. radial load: 50 N (0630), 100 N (1040)

Order key complete ➤ Page 1316

drylin E compatible

Available as a motorized version DryLin® E ➤ **Page 1317**

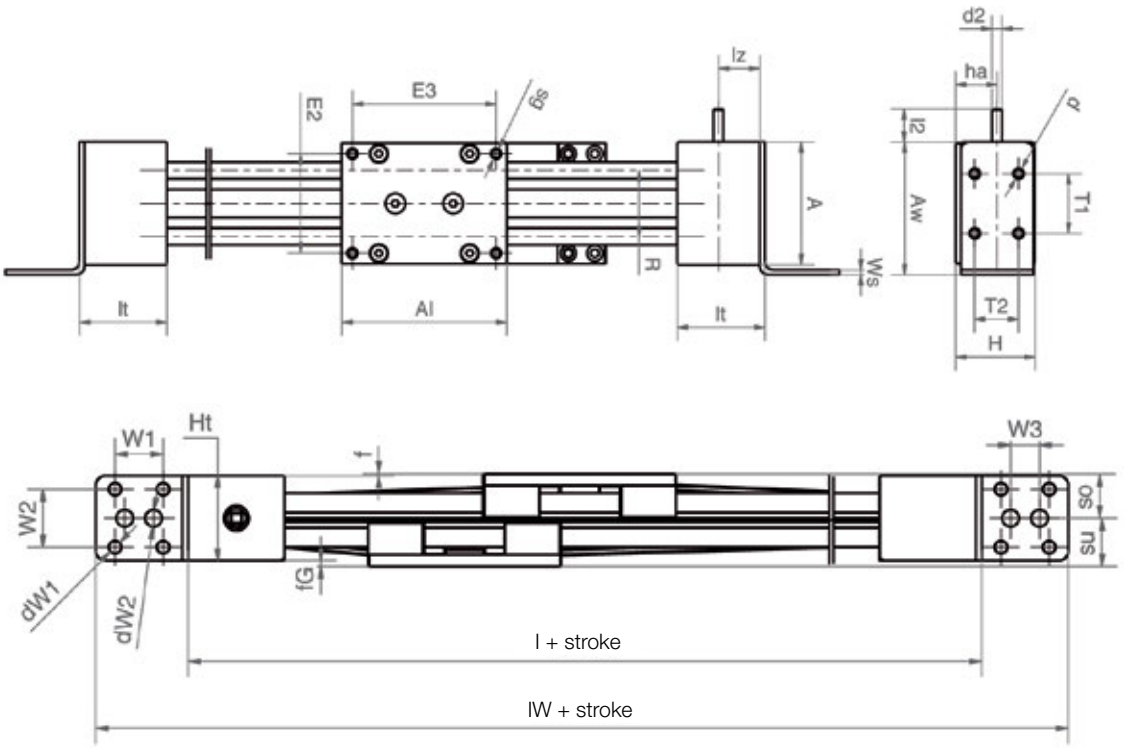

Dimensions [mm]

Part No.	A	Al	H	Ht	E2	E3	l	R	f	fG	lt	sg	ha	l2	d2
	–0.3				±0.15	±0.15		±0.15			±0.3				h9
ZLW-0630-OD[109)]	54	60	31	28	45	51	144	30	3	7	42	M4	14	20	8
ZLW-1040-OD	74	100	45	44	60	87	204	40	1	3	52	M6	22	20	10

Part No. Connecting dimensions	d	SU	SO	T1	T2	lz	Ws	W1	W2	W3	dw1	dw2	lW	AW
				±0.2	–1.0								±0.25	±0.25
ZLW-0630-OD[109)]	4	21	17	20	21	20	2	20	2	10	5.5	6.6	260	60
ZLW-1040-OD	5	25	23	36	26.5	24	3	25	3	15	6.6	8.8	296	80

[109)] Basic version: 6 mm square, plastic adapter for pin diameter 10 mm included

DryLin® ZLW - Product range

ZLW-1040 Toothed belt axis - Specialists

Version LT for cold storage down to -22°F (–30 °C)
Version UW for underwater use
Version SW for use in the splash water area

The long established toothed belt drives have been developed for the fast positioning of low loads. The linear units with toothed belt drive are corrosion free, light and compact, as well as having a low mass inertia due to low mass of guide and sliding carriage.

Order key complete ➤ Page 1316

drylin E compatible

Available as a motorized version DryLin® E ➤ **Page 1317**

Technical data

		Unit	ZLW-1040-LT	ZLW-1040-UW	ZLW-1040-SW
Weight without stroke		**kg**	1.0	1.0	1.0
Weight 100 mm stroke		**kg**	0.14	0.14	0.14
Max. stroke length		**mm**	2,000	1,000	2,000
Transmission		**mm/rev**	70	70	70
Tooth profile			AT 5	AT 5	AT5
Belt drive	-material		TPUKF2	PU + stainless steel reinforcement	PU + stainless steel reinforcement
	-width	**mm**	16	16	16
	-tension	**N**	200	50	200
Max. radial load		**N**	300	100	200
Guide bearing			Cold ball bearing	xiros®-ball bearing	stainless steel ball bearing
Max. speed		**m/s**	5	1	5
Max. position variation of the carriage, load dependent		**mm**	±0.2	±0.5	± 0.2

DryLin® ZLW - Product range

ZAW – Cantilever axis

- Drive unit fixed, only profile and load are moved
- Hard-anodized aluminum axis profile
- 100% self-lubricating and corrosion free
- Lightweight
- Max. Stroke 1,000 mm
- Max. axial load 50 N
- Available as standard version
- Allowed moment for carriage $M_{y\,max}$: 15 Nm

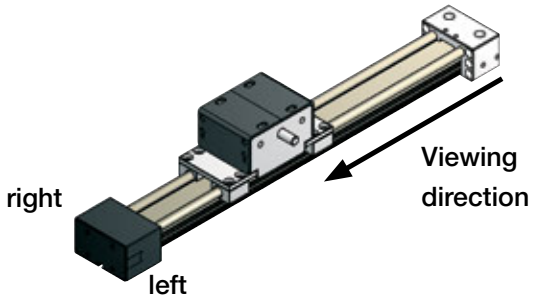

Order key

ZAW-1040-02-S-150-L-xxx

- Stroke length in mm
  - 1040: max. 1,000
- Drive shaft
  - L = drive shaft left
  - R = drive shaft right
  - L/R = drive shaft both-sides
- Length of carriage in mm
- Design
  - S: Design – standard
- Version
  - 02 with deep groove ball bearings
- Installation size
- Cantilever axis

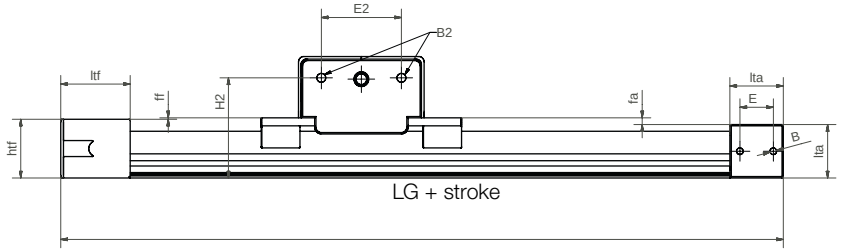

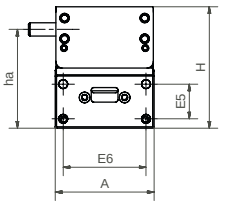

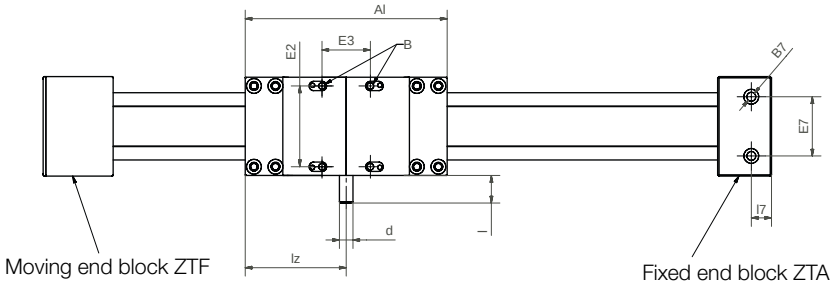

Dimensions [mm]

Part No.	A –0.3	H	H2	LG	Al ±0.3	ha ±0.1	d h9	l +1	l7	lz	E2 ±0.15	E3 ±0.15
ZAW-1040	74	91	75	242	150	74	10	20	15	75	60	60

Part No. Connecting dimensions	B –0.3	B2	htf	ltf ±0.3	ff ±0.1	fa h9	lta ±0.1	E4	B4 ±0.15	B7	E5 ±0.15	E6	E7
ZAW-1040	M6	M8	44	52	2	5	40	25	M6	M6	26	62	44

The DryLin® ZLW belt drive can be mounted in different ways (clamp and slot nuts included in delivery):
The orientation of the drive is optional. Overhead installation is the best option against contamination.
Directions for installation: The end blocks should not be used as a mechanical stop under any circumstances. A buffer length is to be provided on both sides which corresponds to at least one revolution of the drive shaft. The safety distance provided at both sides of the guide carriage can be reduced provided that it is ensured that the housings of the drive and end blocks do not collide with the mechanical parts. The igus® staff would be pleased to provide you with more information on the fastening and connecting of the belt drive.

Clamps
Fixing clamps offer an easy fastening potential of the axis, among other things, on aluminum profiles

Linear axis	Part No.
ZLW-0630	ZTZ-06300674
ZLW-1040	75.40 ZLW
ZLW-1080	75.40 ZLW
ZLW-1660	NOR-20602

10 pieces included in delivery
(assembly on profile grooves right and left)

Slot nuts
Slot nuts enable the installation in 3 sides (1040/1080: left, right, below) or 2 sides (0630: left, right) as well as the mounting of sensors and proximity switches for positioning.

Linear axis	Part No.
ZLW-0630	NOR-2060274
ZLW-1040	NOR-20602
ZLW-1080	NOR-20602
ZLW-1660	NOR-20602

8 pieces included in delivery
(assembly in profile grooves)

Screw connection
Front screw connection: Threaded holes for individually insertable screws are located at the extreme rail end.

4 x M6/M4 (optional)

DryLin® ZLW - Order key

Order key for a complete system:

ZLW-0630-OD-02-B-60-L-2000

Stroke length
ZLW-0630: max.1,000 mm, OD-Version max. 1,000 mm
ZLW-1040: Max.2,000 mm, OD-Version max. 1,500 mm
ZLW-1080: max. 2,000 mm
ZLW-1660: max. 3,000 mm

Drive shaft
L: Drive shaft left
R: Right-hand drive shaft
L/R: Drive both sides

Length of carriage
60: 60 mm
100: 100 mm
150: 150 mm
200: 200 mm
250: 250 mm

Design
S: Type series – standard
B: Type series – basic

Version
02 with grooved ball bearings

Options
OD: Reverse (0630/1040)
LT: For cold applications
UW: For underwater applications
SW: For splash water applications

Type
0630
1040
1660

Belt drive axis

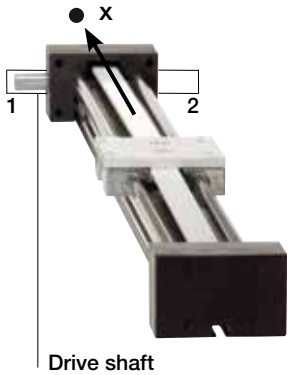

Determination of the position of the drive shaft (right or left), in the line of vision x!
1 = drive shaft left
2 = drive shaft right
x = in the line of vision of drive shaft

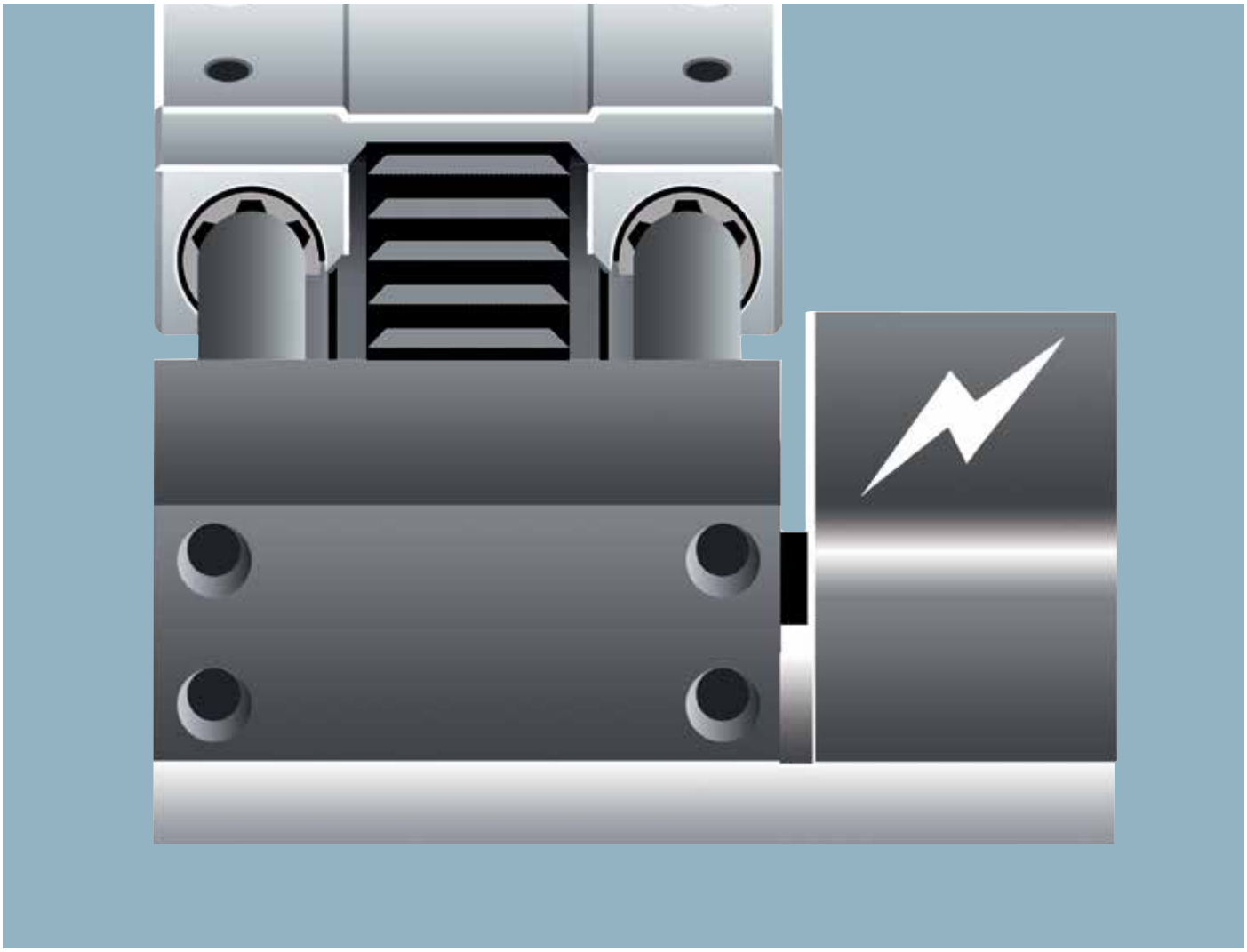

DryLin® E - Electric Drive Technology

- Self-lubricating linear modules
- Clean operation, resistant to dirt
- Lead screw systems, belt-driven systems, gear rack systems
- Large range of accessories
- Cost-effective
- Configure online

DryLin® E - Advantages

Linear axes with motor

Self-lubricating and maintenance free DryLin® linear guide systems

Clean with no external lubrication required

Lightweight plastic and aluminum components

Drive: lead screw, timing belt or rack and pinion

End support uses a ball bearing for high RPM's

Suitable motor kits (flange/coupling) for DryLin® E-motors

Limit and reference switches

Available with NEMA stepper motors or DC motors

Increased machine reliability with encoder and brake options

Chainflex® motor cables and E-Chain Systems® from igus®

Automation with DryLin® E

The requirements for motorized linear stages are becoming ever more demanding, installation spaces are reducing in size and customized solutions are sought for many systems. DryLin® offers the right linear axis for many applications using lead screw, timing belt or rack drive. With DryLin® E-automation technology, DryLin® linear axes can be assembled with NEMA standard stepper motors or DC motors. Integrated encoders and additional proximity sensors offer positioning reliability. The combination of linear axes makes it possible to offer entire gantry systems as line/surface or room gantries. All DryLin® linear axes can be calculated, configured and ordered entirely online.

- Self-lubricating
- Clean and dirt resistant operation
- Extensive accessories

Typical application areas:

- Packaging technology
- Laboratory technology
- Kiosk
- Medical technology

Online configurator
➤ www.igus.com/DryLinE-finder

Price breaks online
No minimum order value.

Detailed information about delivery time online.

DryLin® E - Product overview

Linear stage with motor

- Preconfigured DryLin® E linear actuators
  (motor / stroke length / orientation)
  drive options: lead screw / toothed belt / gear rack)
- Individually configurable DryLin® E linear axes
  (axis/drive/stroke length / motor / orientation)
- Drive options: lead screw / toothed belt / rack

➤ **Page 1322**

Lead screw motors

- Space-saving, do not require coupling motor rotor and lead screw
- Precise and efficient
- Compact structure, variable lead screw pitches
- Stepper motors with/without encoder

➤ **Page 1340**

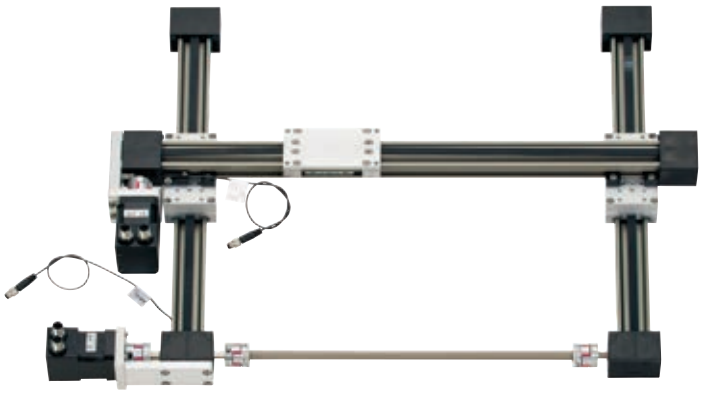

Gantries

- Preconfigured assembly kits available from stock
- 3 different gantries: line / flat / room
- Workspaces up to 500 x 500 x 100 mm

➤ **Page 1344**

Individual parts

- NEMA stepper motors, DC motors
- Limit and positioning sensors
- Accessories: extensions, spacers, adapter plates etc.

➤ **Page 1349**

DryLin® E - Application examples

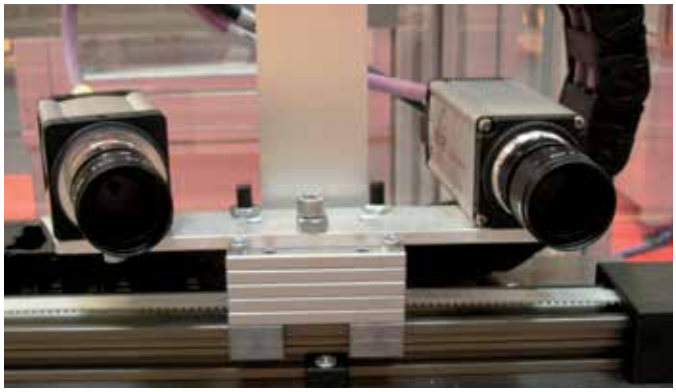

CAMERA ADJUSTMENT
Quiet, vibration and self-lubricating operation using a DryLin® ZLW toothed belt axis on this camera adjustment on a conveyor belt.

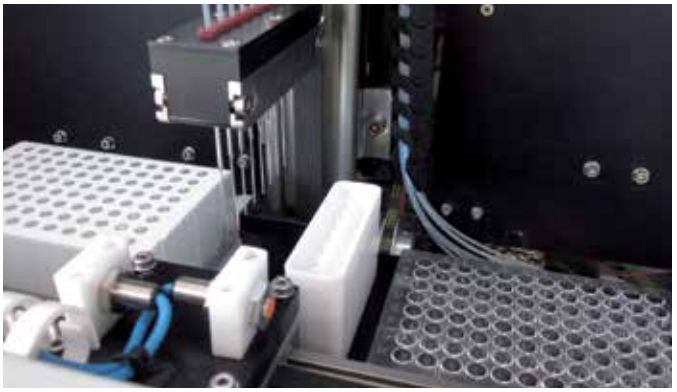

SAMPLER/PIPETTOR
Space-saving adjustment with the compact and self-lubricating DryLin® ZLW toothed belt system.
(Sierra Sensors GmbH)

INSPECTION CAMERA ADJUSTMENT
DryLin® ZLW belt system in an inspection camera adjustment for checking the position of sealing rings.
(OLPE Jena GmbH)

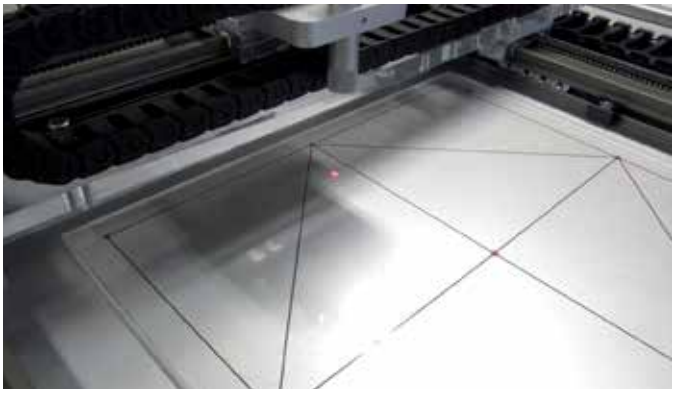

SENSOR ADJUSTMENT/MEASURING SYSTEMS
DryLin® ZLW-0630 belt drive system as a two-axis gantry (X,Y axis) to adjust a laser measuring head. Compact, lightweight and maintenance free.

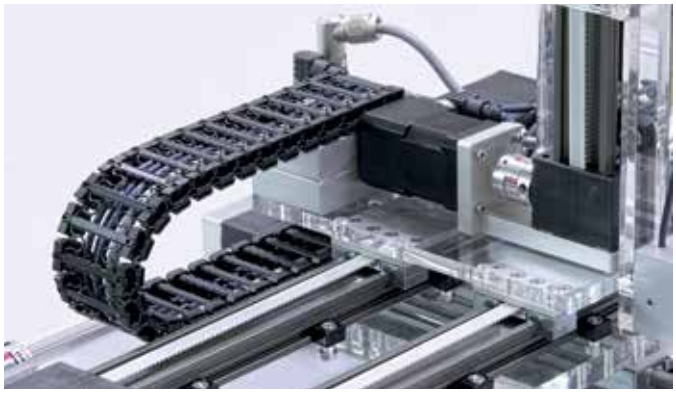

PICK AND PLACE
Fast and maintenance free handling with DryLin® belt drive as as a three-axis gantry (X,Y,Z axis).

SMALL PARTS HANDLING
The tough and self-lubricating design of the ZLW and DryLin® W profiles allows a long and maintenance free process cycle.

DryLin® E - Online

Complete drive technology configurable, including motors

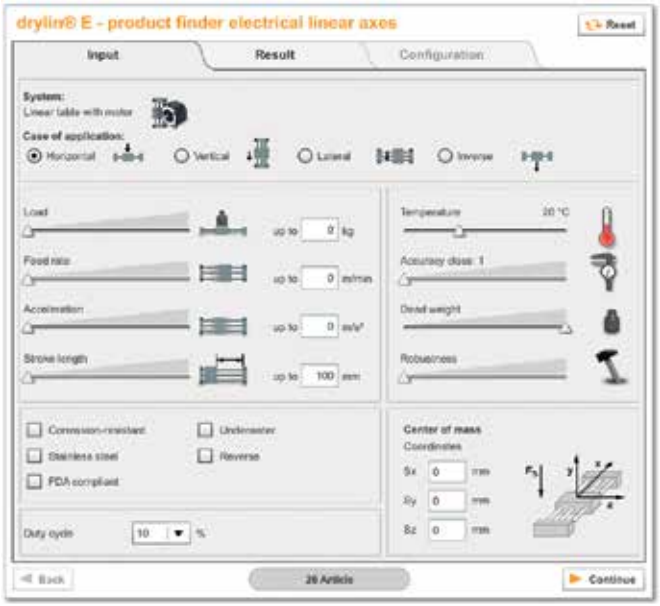

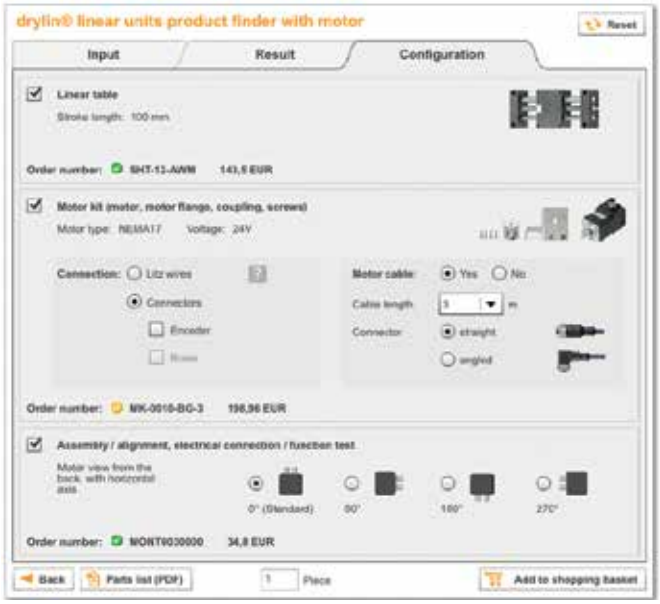

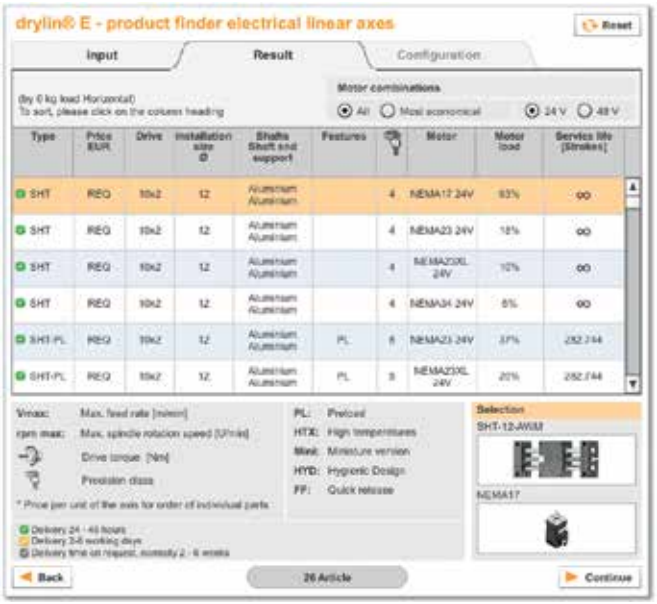

In addition to calculating the correct linear unit, the product finder for DryLin® drive technology also assists in calculating the correct motors, and service life. The complete system can be found, configured and ordered all with the same online tool.

- Linear solutions tailored to your application, including motor
- Configure options and accessories and order online
- Motor selection based on load and application data
- Easy to understand results screen
- Convenient access to other functions, such as online catalog, shopping-basket, downloads, etc.

➤ **www.igus.com/DryLinE-finder**

DryLin® E - Linear axes with motor

DLE-SA-0001
ZLW-0630 Basic plus motor kit

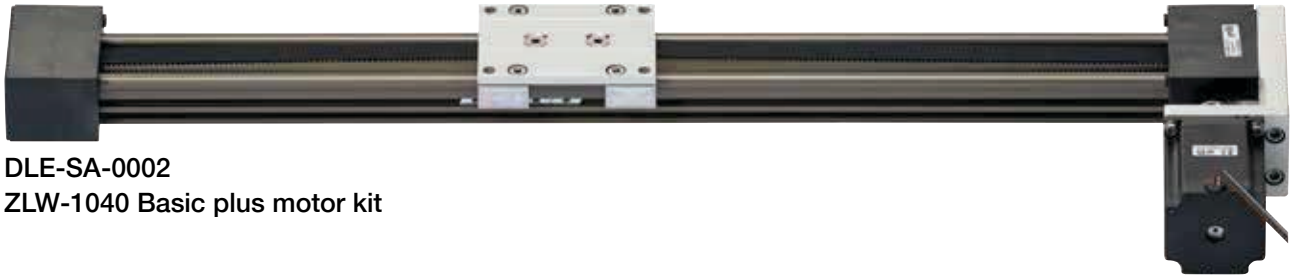

DLE-SA-0002
ZLW-1040 Basic plus motor kit

DLE-SA-0003
ZLW-1080 Standard plus motor kit

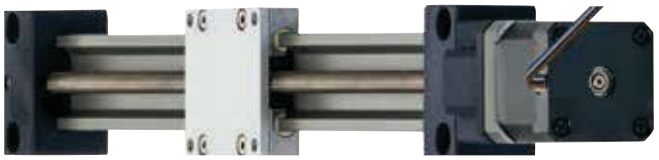

DLE-SA-0004
SAW-0630 with TR08x1.5 plus motor kit

DLE-SA-0005
SAW-1040 with TR10x2 plus motor kit

DLE-SA-0006
SAW-1080 with TR12x3 plus motor kit

DryLin® E - Linear axes with motor

Linear axes with motor

igus® now delivers ready to install, pre-assembled linear stages (drive options: lead screw, toothed belt, gear rack) from stock.

Choose from 3 sizes, 3 stroke lengths and 3 stepper motors.

- Drive: lead screw or toothed belt, gear rack
- Self-lubricating
- NEMA stepper motors with stranded wires
- Pre-assembled and tested
- Based on DryLin® linear axes ZLW and SAW

Technical data

Part No.	Installation size	Carriage length	Stroke length	Motor	Max. static load capacity	
					axial [N]	radial [N]
DLE-SA-0001	ZLW-0630 Basic	60	300	NEMA17 stranded wires	35	140
DLE-SA-0002	ZLW-1040 Basic	100	500	NEMA23 stranded wires	100	400
DLE-SA-0003	ZLW-1080 Standard	100	1,000	NEMA23XL stranded wires	150	600
DLE-SA-0004	SAW-0630 Tr08x1.5	60	250	NEMA17 stranded wires	100	400
DLE-SA-0005	SAW-1040 Tr10x2	69	500	NEMA23 stranded wires	500	2,000
DLE-SA-0006	SAW-1080 Tr12x3	100	500	NEMA23XL stranded wires	750	2,000

Dimensionally interchangeable with DryLin® linear axes

- SAW ➤ **Page 1270**
- ZLW ➤ **Page 1310**

Technical data

- SAW ➤ **Page 1270**
- ZLW ➤ **Page 1310**

Further information about the motors

➤ **Page 1354**

DryLin® E - Linear axes with motor - SAW

Linear axes with lead screw drive

When to use it?

- For format adjustments and to position medium loads
- In extreme environments
- When a cost-effective, ready-to-fit solution is needed
- For low noise
- For unsupported installations

When not to use it?

- When high loads need to travel at highly dynamic speeds
- When positioning accuracy <0.1 mm is required
- When running high speed in continuous operation

Self-lubricating and maintenance-free DryLin® W linear profile guides

Hard anodized DryLin® W aluminum profile

trapezoidal thread pitches or high helix thread pitches

Shaft end supports from aluminum or plastic

Motor flange: motor connections

Coupling

igus® DC motors
- Cost-effective
- Maintenance free
- 4 versions
- Battery operation possible

igus® stepper motors
- Cost-effective
- Maintenance free
- 5 sizes
- 17 versions

Drawings, dimensions, technical specifications, such as SAW ➤ Page 1270

DryLin® E - Linear axes with motor - SAW

Complete drive technology configurable, including motors

Order key

SAW-1040-EPL-07-S0020RG-450-17-M-S-000

Type

Installation size
- 0630
- 1040
- 1080
- 1660

Design

SAW-0630
- **S:** Standard
- **M:** Mono carriage (plastic)

SAW-1040/1660
- **S:** Standard
- **E:** Adjustable linear bearing
- **PL:** Preload (50 N)
- **EPL:** Adjustable, preload (50 N)

SAW-1080 ➤ **Page 1270**

Carriage length

SAW-0630
- **06:** 60 mm (standard)

SAW-1040
- **07:** 69 mm (standard)
- **10:** 100 mm
- **15:** 150 mm

SAW-1660
- **15:** 150 mm (standard)

SAW-1080 ➤ **Page 1270**

Lead screw material
- **S:** Steel
- **E:** Stainless steel

Pitch

SAW-0630
- **0015:** Tr08x1.5 mm (steel)
- **0150:** Sg08x15 mm (stainless steel)

SAW-1040
- **0020:** Tr10x2 mm (steel/stainless steel)
- **0030:** Tr10x3 mm (steel/stainless steel)
- **0120:** Sg10x12 mm (stainless steel)
- **0500:** Sg10x50 mm (stainless steel)

SAW-1080 ➤ **Page 1270**

SAW-1660
- **0040:** Tr14x4 mm (steel/stainless steel)

Thread
- **R:** Right | **L:** Left

Lead screw end
- **G:** Threaded end

Stroke length
- **SAW-0630:** max. 300 mm
- **SAW-1040:** max. 500 mm
- **SAW-1660:** max. 750 mm

Motor size
- **17:** NEMA17: recommended axis 0630
- **23:** NEMA23: recommended axis 1040
- **23XL:** NEMA23XL: recommended axis 1040
- **DC01:** DC-Motor: 0.1 Nm recommended axis 0630
- **DC03:** DC motor: 0.3 Nm recommended axis 0630/1040
- **DC07:** DC-Motor: 0.7 Nm recommended axis 0630
- **DC15:** DC motor: 1.5 Nm recommended axis 1040/1660

Motor option
- **L:** Stranded wires
- **M:** metric connector
- **C:** Encoder
- **D:** Encoder and brake
- **F:** Low profile connector (DC motor)

Assembly
- **S:** Assembly on the drive shaft (standard)

Electrical connection alignment
- **000:** 0° (standard)
- **090:** 90°
- **180:** 180°
- **270:** 270°

DryLin® E - Linear axes with motor - SAWC

Linear axes with lead screw drive

When to use it?

- For format adjustments and to position low to medium loads
- When a compact solution
- When a cost-effective, ready-to-fit solution is needed
- For low noise
- For unsupported installations

When not to use it?

- When high loads need to travel at highly dynamic speeds
- When positioning accuracy < 0.1 mm is required
- When running high speed in continuous operation

Shaft end block made from anodized aluminum

Hard anodized DryLin® W aluminum profile (high profile shape)

Trapezoidal lead screw thread pitches or high helix thread pitches

Self-lubricating and maintenance-free DryLin® W linear profile guides

igus® stepper motors
- Cost-effective
- Maintenance free
- 2 sizes

DryLin® E - Linear axes with motor - SAWC

Complete drive technology configurable, including motors

Order key

SAWC-1040-EPL-07-S0020RG-300-17-L-S-090

Type

Installation size
- 0630
- 1040

Design

SAWC-0630
- **S:** Standard
- **M:** Mono carriage (plastic)

SAWC-1040
- **S:** Standard
- **E:** Adjustable linear bearing
- **PL:** Preload (50 N)
- **EPL:** Adjustable, preload (50 N)

Carriage length

SAWC-0630
- **06:** 60 mm (standard)

SAWC-1040
- **07:** 69 mm (standard)
- **10:** 100 mm
- **15:** 150 mm

Lead screw material
- **S:** Steel
- **E:** Stainless steel

Pitch

SAWC-0630
- **0015:** Tr08x1.5 mm (stainless steel)
- **0150:** Sg08x15 mm (stainless steel)

SAWC-1040
- **0020:** Tr10x2 mm (stainless steel)
- **0120:** Sg10x12 mm (stainless steel)
- **0500:** Sg10x50 mm (stainless steel)

Thread
- **R** = Right

Lead screw end
- **G:** Threaded end

Stroke length
- **SAWC-0630:** max. 300 mm
- **SAWC-1040:** max. 500 mm

Motor size
- **17:** NEMA17: recommended axis 0630
- **23:** NEMA23: recommended axis 1040

Motor option
- **L:** Stranded wires

Assembly
- **S:** Assembly on the drive shaft (standard)

Electrical connection alignment
- **000:** 0° (standard)
- **090:** 90°
- **180:** 180°
- **270:** 270°

DryLin® E - Linear axes with motor - SLW

Linear axes with lead screw drive

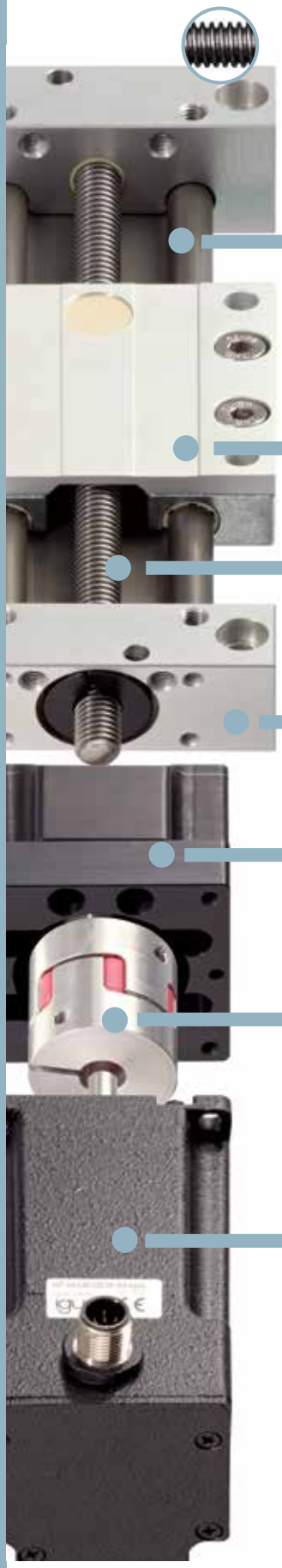

When to use it?

- For format adjustments and to position medium loads
- In extreme environments
- When a cost-effective, ready-to-fit solution is needed
- For low noise
- When installation space is limited

When not to use it?

- When high loads need to travel at highly dynamic speeds
- When positioning accuracy <0.1 mm is required
- When running high speed in continuous operation

Hard anodized DryLin® W aluminum profile

Self-lubricating and maintenance-free DryLin® W linear profile guides

Trapezoidal thread pitches or high helix thread pitches

End blocks made from aluminum or plastic

Motor flange: motor connections

Coupling

igus® DC motors
- Cost-effective
- Maintenance free
- 4 versions
- Battery operation possible

igus® stepper motors
- Cost-effective
- Maintenance free
- 5 sizes
- 17 versions

Drawings, dimensions, technical specifications, such as SLW ➤ Page 1264

DryLin® E - Linear axes with motor - SLW

Order key

SLW-1040-EPL-07-S 0020 R G-750-17-L-S-000

Type

Installation size
0630
1040/1080
1660
2080

Design
SLW-0630
BB: Ball bearing
SLW-1040/1080/1660/2080
S: Standard
E: Adjustable linear bearing
PL: Preload (50 N)
EPL: Adjustable, preload (50 N)
BB: Ball bearing
BBE: Ball bearing, adjustable linear bearing
BBPL: Ball bearing, preload (50 Nm)
BBEPL: Ball bearing, adjustable linear bearing, preload (50N)

Carriage length
SLW-0630
06: 60 mm (standard)
SLW-1040
07: 69 mm (standard)
10: 100 mm
15: 150 mm
SLW-1080/1660/2080
15: 150 mm (standard)
SLW-25120

Lead screw material
S: Steel
E: Stainless steel

Pitch
SLW-0630
0015: TR8x1.5 mm (steel)
0150: SG8x15 mm (stainless steel)
SLW-1040/1080
0020: TR10x2 mm (steel/stainless steel)
0030: TR10x3 mm (steel/stainless steel)
0120: SG10x12 mm (stainless steel)
0500: SG10x50 mm (stainless steel)
SLW-1660
0040: TR14x4 mm (steel/stainless steel)
SLW-2080
0040: TR18x4 mm (steel/stainless steel)
SLW-25120 (steel/stainless steel)

Thread
R = Right
L = Left

Lead screw end
G: Threaded end
Z: End 12h9 (with SLW-2080)

Stroke length
SLW-0630: max. 300 mm
SLW-1040/1080: max. 750 mm (BB: max.500 mm)
SLW-1660: max 750 mm
SLW-2080: max 1,000 mm (BB: 900 mm)

Motor size/Recommended axis
17: NEMA17/0630
23: NEMA23/1040, 1080
23XL: NEMA23XL/1040, 1080, 1660
34: NEMA 34 / 2080
DC01: DC-Motor: 0.1 Nm/0630
DC03: DC-Motor: 0.3 Nm/0630, 1040
DC07: DC-Motor: 0.7 Nm/1040
DC15: DC-Motor: 1.5 Nm/1040, 1660

Motor option
L: Stranded wires
M: metric connector
C: Encoder
D: Encoder and brake
F: Low profile connector (DC motor)

Assembly
S: Assembly on the drive shaft (standard)

Electrical connection alignment
000: 0° (standard)
090: 90°
180: 180°
270: 270°

DryLin® E - Linear axes with motor - HTS

Linear axes with lead screw drive

When to use it?

- For format adjustments and to position medium loads
- In extreme environments
- When a cost-effective, ready-to-fit solution is needed
- For low noise
- When installation space is limited

When not to use it?

- When high loads need to travel at highly dynamic speeds
- When positioning accuracy <0.1 mm is required
- When running high speed in continuous operation

3 shaft materials

trapezoidal lead screw thread pitches or high helix thread pitches

Self-lubricating and maintenance-free with DryLin® liners and lead screw nuts

Carriages and end blocks made from anodized aluminum

Motor flange: motor connections

Coupling

igus® DC motors
- Cost-effective
- Maintenance free
- 4 versions
- Battery operation possible

igus® stepper motors
- Cost-effective
- Maintenance free
- 5 sizes
- 17 versions

Drawings, dimensions, technical specifications, such as HTS ➤ Page

DryLin® E - Linear axes with motor - HTS

Order key

HTS-12-BBZB-AWM-S0020RG-750-17-L-S-000

Type

Installation size
12
20
30

Design
S: Standard
PL: Preload (50 N)
BB: Ball bearing
BBPL: Ball bearing, preload (50 N)
BBZB: Ball bearing, zero-backlash
(only HTS-12 with SG10x12)

Shaft material
AWM: Hard-anodized aluminum
SWM: Cf53 (1.1213)
EWM: Stainless steel X105 (1.4125)

Lead screw material
S: Steel
E: Stainless steel

Pitch
HTS-12
0020: Tr10x2 mm (steel/stainless steel)
0030: Tr10x3 mm (steel/stainless steel)
0120: Sg10x12 mm (stainless steel)
0500: Sg10x50 mm (stainless steel)
HTS-20
0040: Tr18x4 mm (steel/stainless steel)
HTS-30
0050: Tr24x5 mm (steel/stainless steel)

Thread
R: Right | **L:** Left

Lead screw end
G: Threaded end (with HTS-12)
Z: End 12h9 (with HTS-20)
Z: End 14h9 (with HTS-30)

Stroke length
HTS-12: max. 750 mm (BB max. 500 mm)
HTS-20: max. 1,000 mm (BB max. 900 mm)
HTS-30: max 1,250 mm (BB max. 1000 mm)

Motor size
17: NEMA17: recommended axis 12
23: NEMA23: recommended axis 12/20
23XL: NEMA23XL: recommended axis 20
34: NEMA34: recommended axis 20/30
DC01: DC motor: 0.1 Nm recommended axis 12
DC03: DC motor: 0.3 Nm recommended axis 12
DC07: DC motor: 0.7 Nm recommended axis 12
DC15: DC motor: 1.5 Nm recommended axis 12

Motor option
L: Stranded wires
M: metric connector
C: Encoder
D: Encoder and brake
F: Low profile connector (DC motor)

Assembly
S: Assembly on the drive shaft (standard)

Electrical connection alignment
000: 0° (standard)
090: 90°
180: 180°
270: 270°

DryLin® E - Linear axes with motor - HTSC

Linear axes with lead screw drive

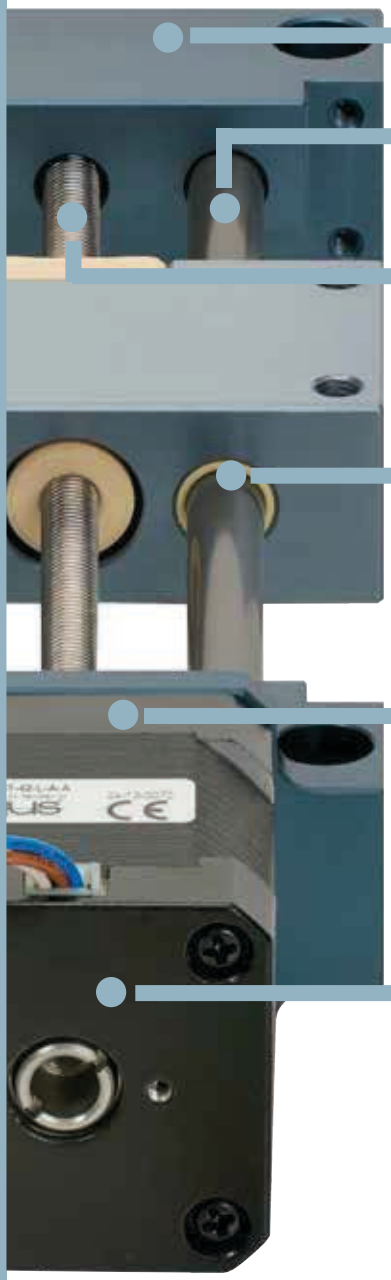

Carriages and end blocks made from anodized aluminum

3 shaft materials: aluminum, stainless steel, steel

trapezoidal lead screw thread pitches or high helix thread pitches

Self-lubricating and maintenance free with DryLin® liners and lead screw nuts

Motor flange and coupling: motor connections

igus® DC motors
- Cost-effective
- Maintenance free
- 4 versions
- Battery operation possible

igus® stepper motors
- Cost-effective
- Maintenance free
- 5 sizes
- 17 versions

DryLin® E - Linear axes with motor - HTSC

Complete drive technology configurable, including motors

Order key

HTSC-08-ZB-A-E127RG-100-17-L-000

Type

Installation size

Design
ZB: Zero backlash

Shaft material
AWM: Hard-anodized aluminum
EWM: Stainless steel X105 (1.4125)

Lead screw design
E020RG: Stainless steel, trapezoidal thread, pitch: 2 mm
E025RZ: Stainless steel dryspin, pitch: 2.54 mm
E127RZ: Stainless steel high helix thread, pitch: 12.7 mm
E254RZ: Stainless steel dryspin, pitch: 25.4 mm

Stroke length
HTSC-08: max. 750 mm

Motor size
17: NEMA17

Motor option
L: Stranded wires with motor flange
C: Encoder with motor flange
G: Lead screw motor with stranded wires
H: Lead screw motor with encoder

Electrical connection alignment
000: 0° (standard)
090: 90°
180: 180°
270: 270°

DryLin® E - Linear axes with motor - ZLW

Linear axes with toothed belt

When to use it?

- Fast positioning of small loads
- Quiet operation
- Slim design
- Continuous operation

When not to use it?

- When high loads must be motion controlled at high dynamic speeds
- When positioning accuracy <0.25 mm is required

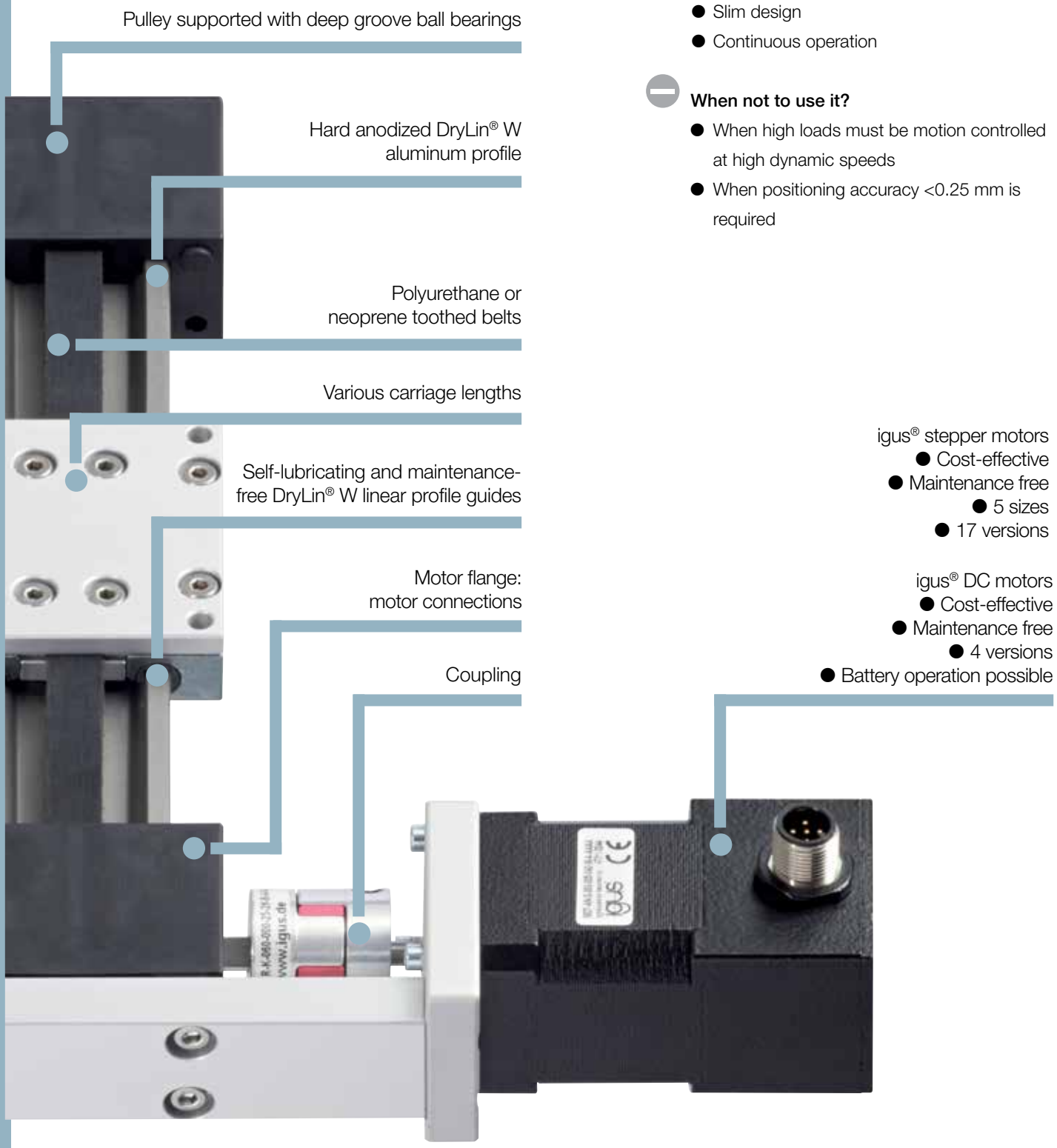

Drawings, dimensions, technical specifications, such as ZLW ➤ Page 1310

DryLin® E - Linear axes with motor - ZLW

Order key

ZLW-1040-02-B-60-L-750-17-M-S-000

Type
ZLW

Installation size
0630
1040
1080
1660

Version
02: With deep groove ball bearings

Design
S: Type series – standard
B: Type series – basic

Carriage length
60: 60 mm (only ZLW 0630)
100: 100 mm
150: 150 mm
200: 200 mm
250: 250 mm

Drive shaft
L: Left-hand drive shaft
R: Right-hand drive shaft
L/R: Drive both sides

Stroke length
ZLW-0630: max. 1,000 mm
ZLW-1040: max. 2,000 mm
ZLW-1080: max. 2,000 mm
ZLW-1660: max. 3,000 mm

Electrical connection alignment
000: 0° (standard)
090: 90°
180: 180°
270: 270°

Assembly*
Drive shaft on one side
S: Motor assembly on defined drive shaft (L or R)
Drive shaft on both sides (L/R)
L: Motor assembly on drive shaft left
R: Motor assembly on drive shaft right

Motor option
L: Stranded wires
M: Metric connectors
C: Encoder
D: Encoder and brake
F: Low profile connector (DC motor)

Motor size
17: NEMA17: recommended axis 0630
23: NEMA23: recommended axis 1040
23XL: NEMA23XL: recommended axis 1040
34: NEMA34: recommended axis 1040/1660
DC01: DC-Motor 0.1 Nm: recommended axis 0630
DC03: DC-Motor: 0.3 Nm: recommended axis 0630
DC07: DC-Motor: 0.7 Nm recommended axis 1040
DC15: DC-Motor: 1.5 Nm recommended axis 1040

*** Assembly example, drive shaft on one side (connection alignment 0°):**

S: Motor assembly on defined drive shaft (L or R)

*** Assembly example, drive shaft on one side (connection alignment 0°):**

L: Motor assembly on drive shaft left

R: Motor assembly on drive shaft right

DryLin® E - Linear axes with motor - SLN

Miniature linear axis with lead screw drive

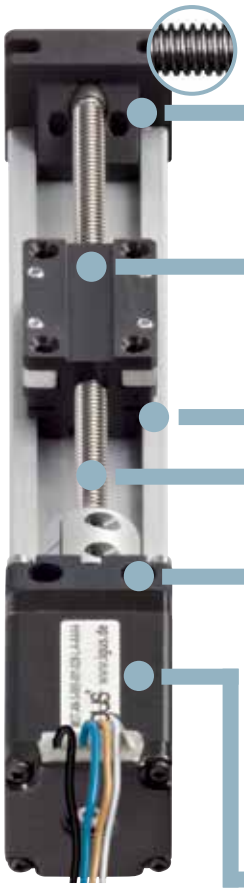

Carriage based on corrosion resistant plastic

Self-lubricating linear guide using polymer plain bearings

Self-lubricating and maintenance-free DryLin® N low profile linear guides

trapezoidal lead screw thread pitch or high helix thread pitch

Motor flange: motor connections

igus® stepper motors
- Cost-effective
- Maintenance free
- 1 size
- 2 versions

Order key

SLN-27-14-0050-100-11-L-S-000

Type

Installation size

Shaft end support
01: Plain bearing
02: Ball bearing

Carriage
03: Basic
04: Standard, adjustable
05: Standard, preload

Pitch
0008: M5x0.8 (stainless steel)
0050: Sg5x5 (stainless steel)
0025: DST6.35x2.54 (stainless steel)
0127: DST6.35x12.7 (stainless steel)
0254: DST6.35x25.4 (stainless steel)

Stroke length
max. 250 mm

Options
HR: Hand wheel
D1-F: DC Motor, 0.025 Nm, 375 rpm
E1-F: DC Motor, 0.06 Nm, 137 rpm
J1-F: DC Motor, 0.19 Nm, 36 rpm
11-L: NEMA11, stranded wires
11-C: NEMA11, encoder/stranded wires
11-G: NEMA11 lead screw motor, stranded wires
11-H: NEMA11 lead screw motor, encoder/ stranded wires

Assembly

Motor pin alignment
000: 0° (standard)
090: 90°
180: 180°
270: 270°

Drawings, dimensions, technical specifications, such as SLN ➤ Page 1281

DryLin® E - Linear axes with motor - GRW

Cantilever axis with rack and pinion

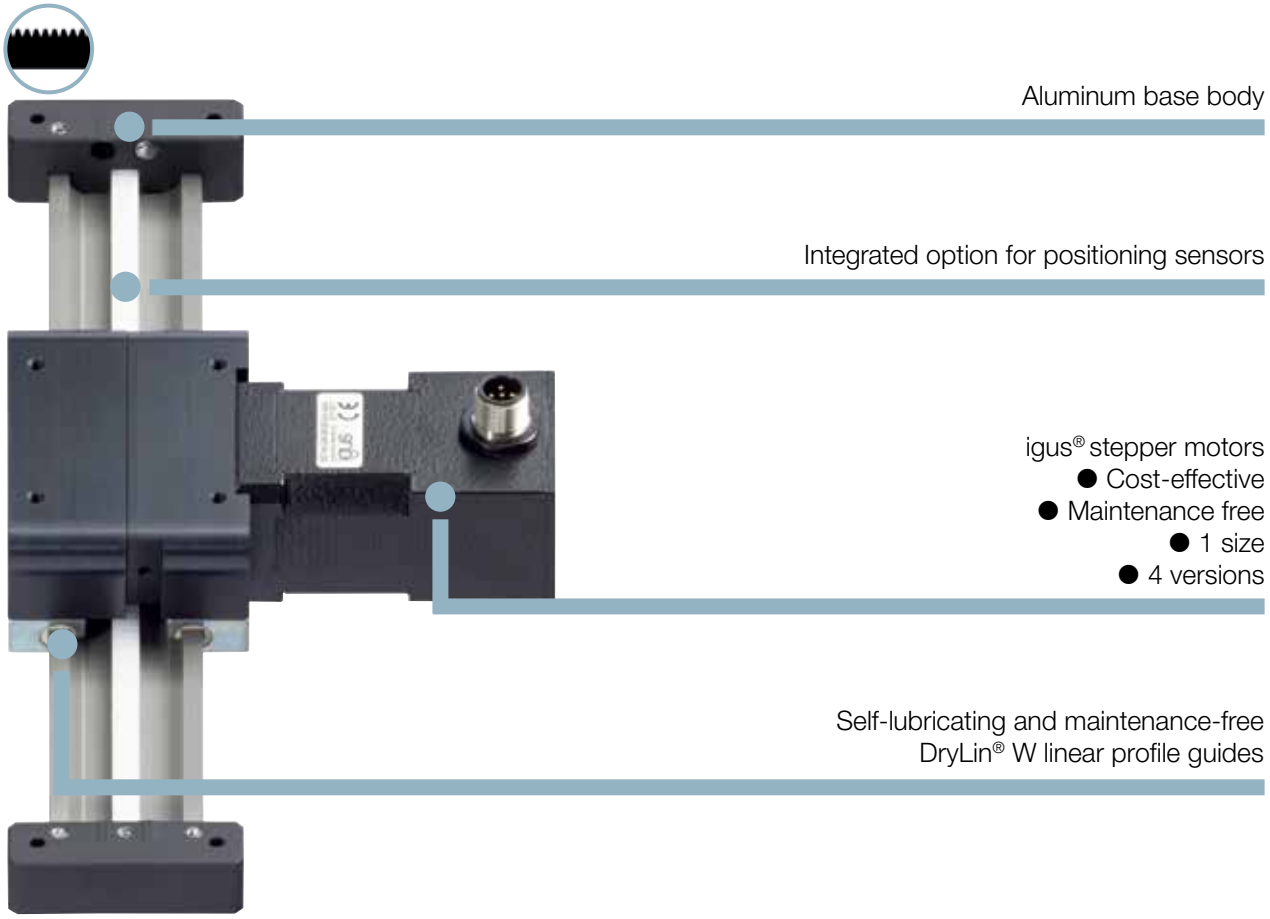

Order key

GRW-0630-A-80-150-17-L-S-000

Type

Installation size
0630

Design
A: Standard

Carriage length
80: 80 mm

Stroke length
max. 150 mm

Motor size
17: NEMA17

Motor option
L: Stranded wires
M: Metric connectors
C: Encoder
D: Encoder and brake

Assembly
S: Assembly with one drive shaft (standard)

Motor pin alignment
000: 0° (standard)
090: 90°
180: 180°
270: 270°

DryLin® E - Linear axes with motor - GRQ

Gripper axis with rack and pinion

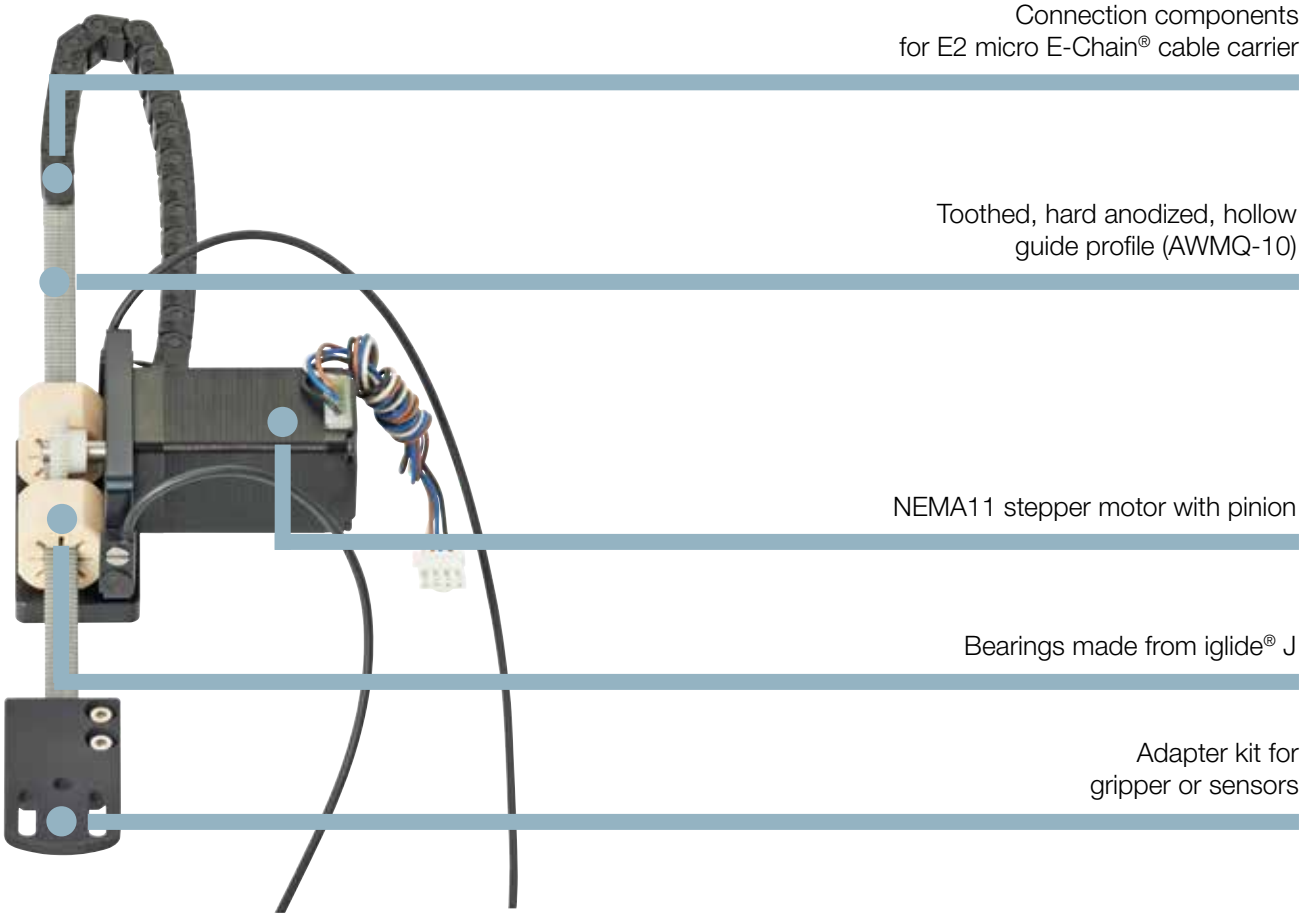

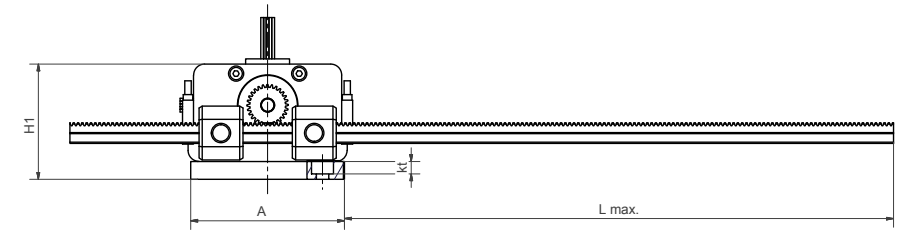

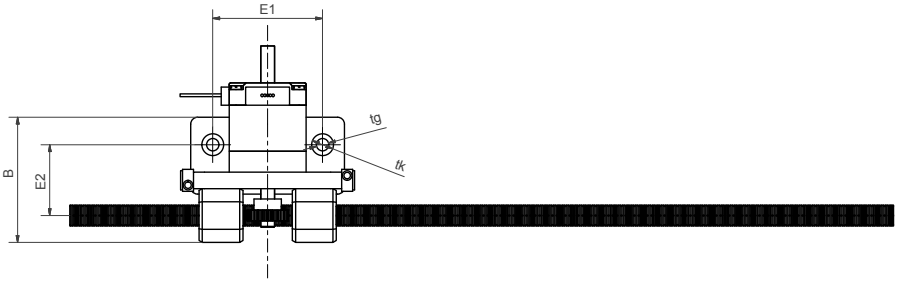

Dimensions [mm]

Part No.	F [N]	v [m/s]	L max	A	H1	E1	E2	B	tg	tk	kt	B	Q	D2
GRQ-10-A-56-120-11-L-01-000	5	0.7	200	56	42	40	26	46	4.5	8	4.5	52	7.5	22

DryLin® E - Linear axes with motor - GRQ

Order key

GRQ-10-A-56-000-120-11-L-S-000

Type

Installation size

Design
A: Standard

Drive unit width

End switch/proximity switch
0: Without
1: Proximity switch L
2: Proximity switch R
3: Proximity switch L + R
4: Proximity switch + trigger L
5: Proximity switch + trigger R
6: Proximity switch + trigger L + R

Chain connection/ Energy supply
0: Without
1: Chain connection L
2: Chain connection R

Adapter / accessories
0: Without
1: Adapter plate L
2: Adapter plate R

Stroke length
max. 200 mm

Motor size
11: NEMA11

Motor option
L: Stranded wires
C: Encoder, stranded wires

Assembly
S: Standard

Motor pin alignment
000: 0° (standard)
090: 90°
180: 180°
270: 270°

DryLin® E - Lead screw motors - Advantages

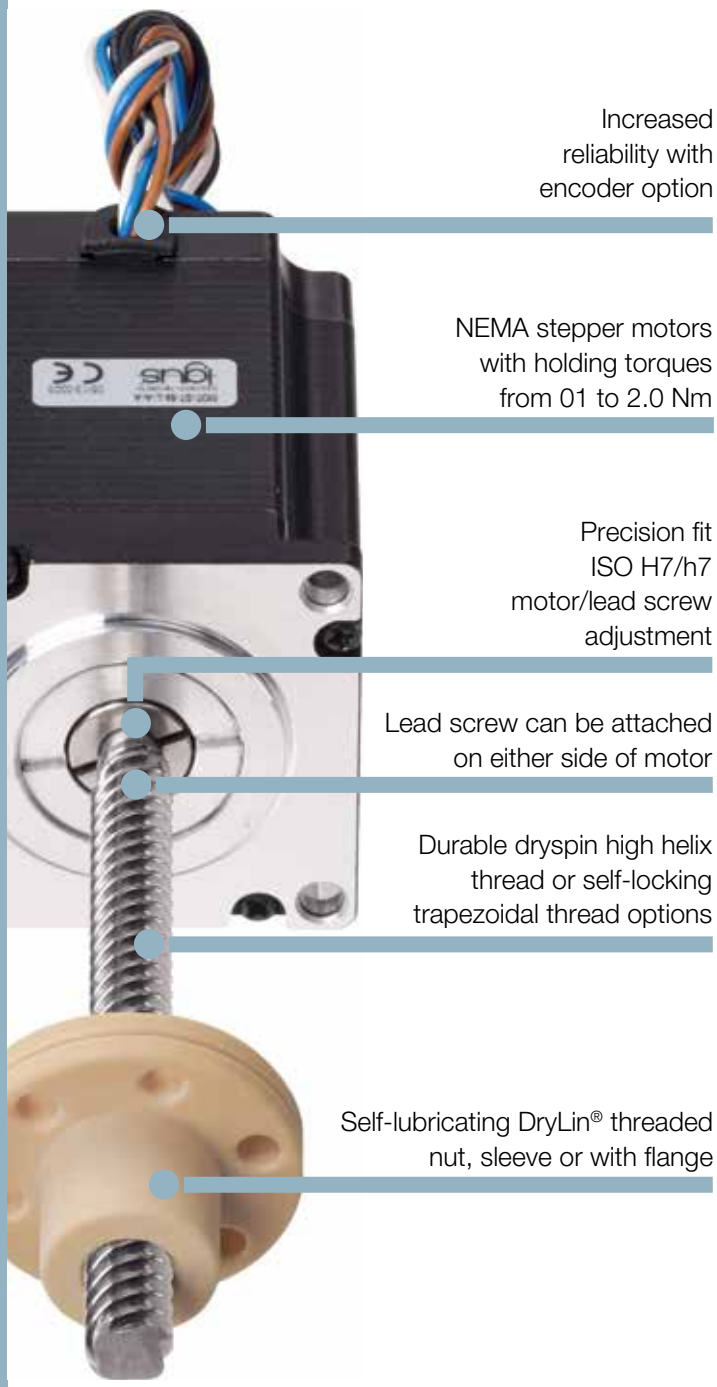

Efficient, precise and compact – DryLin® lead screw motors

DryLin® E offers the optimum solution for systems that need a stepper motor with an integrated lead screw. These stand-alone versions have a compact design and are available with NEMA stepper motors, with and without an encoder. The lead screw is precisely centered and, with the dryspin high helix thread technology the system offers long service life.

- 3 stepper motor sizes
- Self-lubricating DryLin® lead screw technology
- Pre-assembled ready for connection

Typical application areas:

- Medical technology
- Kiosk
- Laboratory technology

max. +122°F (+50°C)
min. +32°F (0°C)

3 stepper motor sizes

Price breaks online
No minimum order value.

Available from stock
Detailed information about delivery time online.

DryLin® E - Lead screw motors - Product overview

Lead screw motor
- NEMA 11/17/23 stepper motors
- Holding torque 01 - 2.0 Nm
- The lead screw can be attached on either side of motor

➤ **Page 1342**

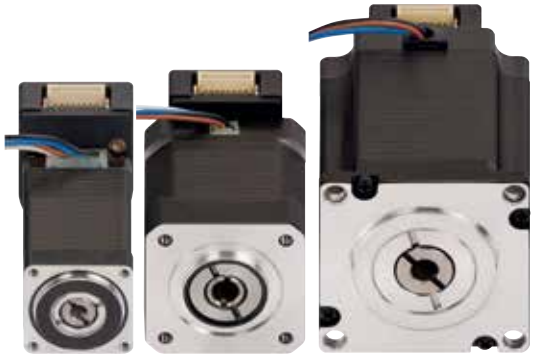

Lead screw motor with encoder
- NEMA 11/17/23 stepper motor
- Increased machine reliability
- 7 lead screw leads from 0.8 - 50 mm

➤ **Page 1342**

DryLin® lead screws for stepper motors
- Efficient dryspin high helix lead screw, ready to install with precision machined ends
- Self-locking trapezoidal thread lead screw, ready to install with precision machined ends
- Available as modules or fully assembled

➤ **Page 1343**

Matching dryspin high helix lead screw nuts
- Available in several geometric designs and pitches

➤ **Page 1165**

Matching DryLin® trapezoidal lead screw nuts
- Self-lubricating, self-locking and available in several plastic materials

➤ **Page 1171**

DryLin® E lead screw motors are installed in
- DryLin® SAWC with motor ➤ **From page 1326**
- DryLin® HTSC with motor ➤ **From page 1332**
- DryLin® SLN with motor ➤ **Page 1336**

DryLin® E - Lead screw motors - Product range

Modular solutions for customer requirements – with or without encoder

- 3 stepper motor sizes with stranded wire and holding torques from 0.1 - 2 Nm
- 7 lead screw types with leads from 0.8 - 50 mm
- Maximum precision by centering the lead screw with a H7/h7 motor/lead screw fit
- Matching lead screw nuts
- When using a stepper motor without an encoder the lead screw can be attached on either side
- Space saving, versatile
- Available for integration with DryLin® linear stages SAWC, SLN and SLT

Technical data – stepper motor with stranded wire

Part No.	Motor size	Bolt pattern		Holding torque	Shaft load	Encoder
		[inch]	[mm]	[Nm]	axial [N]	
MOT-ST-28-L-A-A	NEMA11	1.1	28	0.1	50	no
MOT-ST-42-L-A-A	NEMA17	1.7	42	0.5	100	no
MOT-ST-56-L-A-A	NEMA23	2.3	56	2.0	500	no
MOT-ST-28-L-C-A	NEMA11	1.1	28	0.1	50	yes
MOT-ST-42-L-C-A	NEMA17	1.7	42	0.5	100	yes
MOT-ST-56-L-C-A	NEMA23	2.3	56	2.0	500	yes

Detailed technical data online
➤ www.igus.com/DryLinE

DryLin® E - Lead screw motors - Product range

Lead screw with precision machined ends

- Material: stainless steel
- Lead screw needs to be secured with an adhesive
- Ready to fit

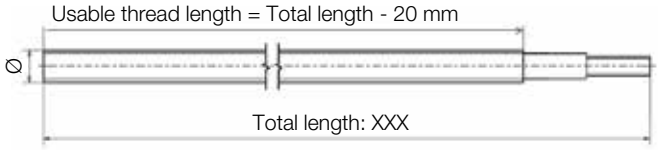

Technical– high helix threads with dryspin technology

Part No.	Motor size	Thread type	Lead screw -Ø	Pitch	max.
		[mm]	[mm]	axial [N]	Length
DST-LS-MOT-6.35X2.54-R-XXX-ES	NEMA11	DST	6.35	2.54	300
DST-LS-MOT-6.35X25.4-R-XXX-ES	NEMA11	DST	6.35	25.4	300
DST-LS-MOT-10X12-R-XXX-ES	NEMA17/23	DST	10	12	500
DST-LS-MOT-10X25-R-XXX-ES	NEMA17/23	DST	10	25	500
DST-LS-MOT-10X50-R-XXX-ES	NEMA17/23	DST	10	50	500
DST-LS-MOT-14X25-R-1000-ES	NEMA17/23	DST	14	25	500

Technical data – high helix threads without dryspin technology

Part No.	Motor size	Thread type	Lead screw -Ø	Pitch	max.
		[mm]	[mm]	axial [N]	Length
PTGSG-MOT-M5X0,8-R-XXX-ES	NEMA11	M5	5	0.8	250
PTGSG-MOT-08X1,5-R-XXX-ES	NEMA17/23	TR	8	1.5	300
PTGSG-MOT-10X2-R-XXX-ES	NEMA17/23	TR	10	2	500
PTGSG-MOT-12X3-R-XXX-ES	NEMA17/23	TR	12	3	500
PTGSG-MOT-12X6P3-R-XXX-ES	NEMA17/23	TR	12	6P3	500
PTGSG-MOT-05X5-R-XXX-ES	NEMA11	SG	5	5	250
PTGSG-MOT-06.35X12.7-R-XXX-ES	NEMA11	SG	6.35	12.7	300
PTGSG-MOT-08X15-R-XXX-ES	NEMA17/23	SG	8	15	300
PTGSG-MOT-10X12-R-XXX-ES	NEMA17/23	SG	10	12	500
PTGSG-MOT-10X50-R-XXX-ES	NEMA17/23	SG	10	50	500
PTGSG-MOT-12X25-R-XXX-ES	NEMA17/23	SG	12	25	500

XXX: Lead screw length

If desired by the factory, please order using the following assembly number:
Assembly front: MONT004F000 (flange side)
Assembly back: MONT004B000 (assembly not possible with a motor with an encoder)

Lead screw needs to be secured with an adhesive (Loctite® 648)!

Curing time: after 6 hours approx. 50%
after 24 hours 100%

DryLin® E - Multi axes gantries - Advantages

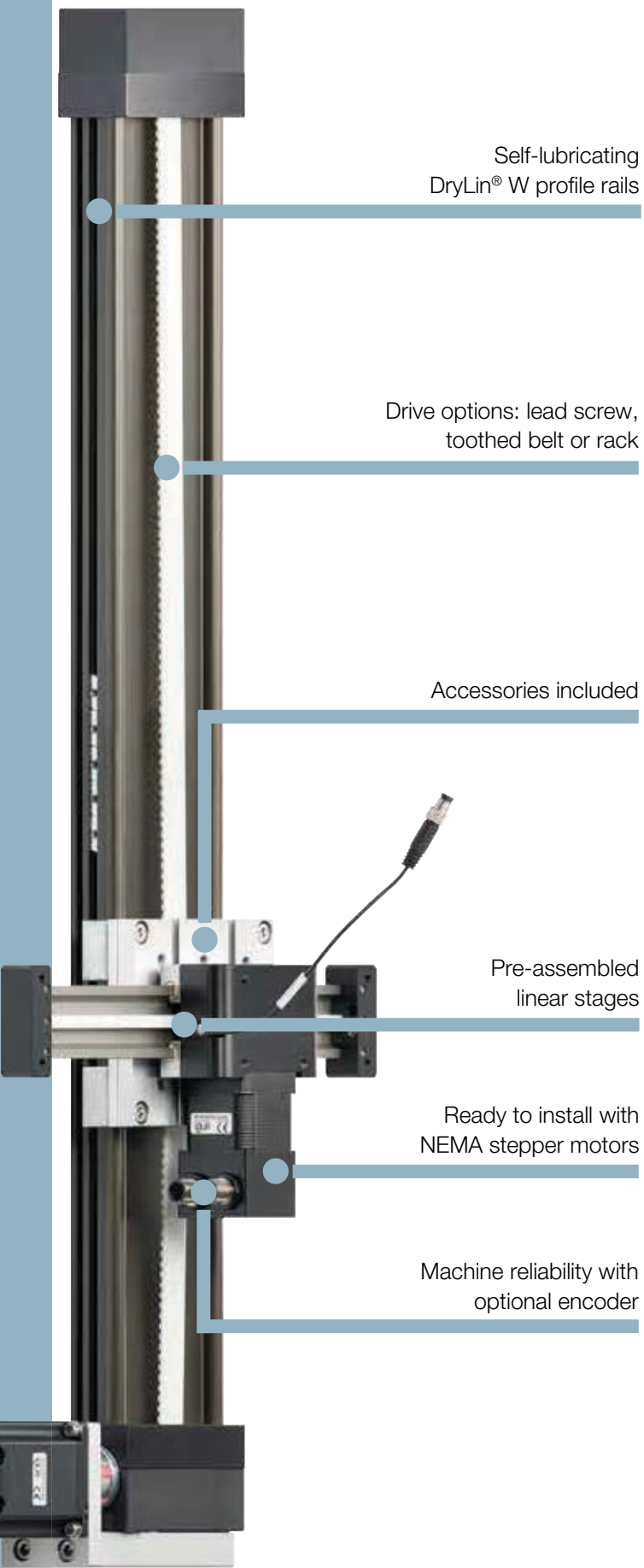

Pre-assembled from stock – DryLin® multi-axis gantries

Gantries combine several linear axes in order to implement a multidimensional movement. igus® offers 3 gantry systems as pre-assembled systems for various applications and workspaces. All of the igus® gantry solutions are based on self-lubricating DryLin® linear stages with stepper motors.

- Drive options: toothed belt, lead screw, or rack and pinion
- From stock
- Easy to assemble

Typical application areas:

- Pick and place
- Measuring and testing
- Assembly handling
- Labeling technology

max. +122°F (+50°C)
min. +32°F (0°C)

3 gantry types
Workspaces up to 500 x 500 x 100 mm

Price breaks online
No minimum order value.

Available from stock
Detailed information about delivery time online.

DryLin® E - Multi axes gantries - Product overview

Line gantry

- Using DryLin® linear systems ZLW-1080 and GRW-0630
- NEMA 17/23 stepper motors, assembled and tested
- Increased machine reliability with optional encoder

➤ **Page 1346**

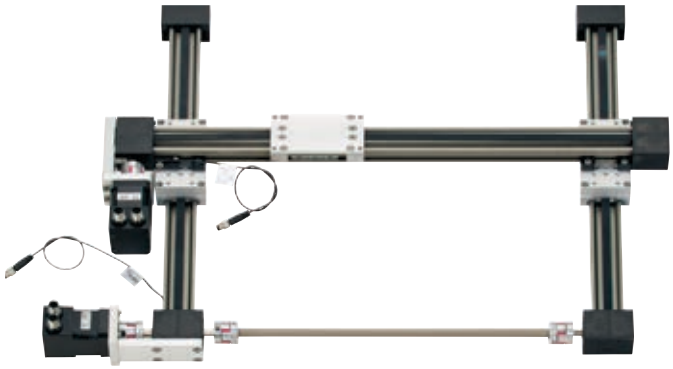

Flat gantry

- Using DryLin® linear systems ZLW-0630
- NEMA17 stepper motors, assembled and tested
- Increased machine reliability with optional encoder

➤ **Page 1347**

Room gantry

- Using DryLin® linear systems ZLW-1040, ZLW-1080 and GRW-0630
- NEMA17/23 stepper motors, assembled and tested
- Increased machine reliability with optional encoder

➤ **Page 1348**

DryLin® E - Multi axes gantries - Product range

Line gantry

Type: line gantry

- **X-axis:** DryLin® GRW-0630 rack drive with NEMA17 stepper motor with encoder
- **Y-axis**: DryLin® ZLW-1080 toothed belt axis with NEMA23 stepper motor with encoder

Technical data

Workspace:	**500 x 100 mm**
Max. speed:	**0.5 m/s**
Max. acceleration:	**3.0 m/s²**
Repeatability:	**0.3 mm**
Load capacity:	**10 N**

Part No.
DLE-LG-0001

Technical data
➤ www.igus.com/drylinE

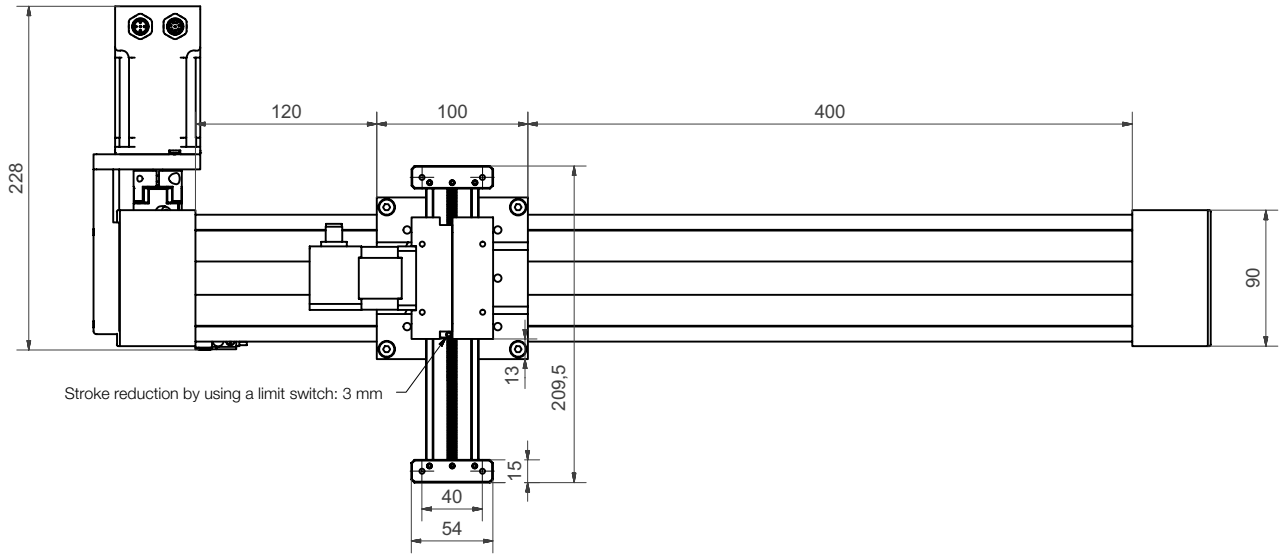

DryLin® E - Multi axes gantries - Product range

Flat gantry

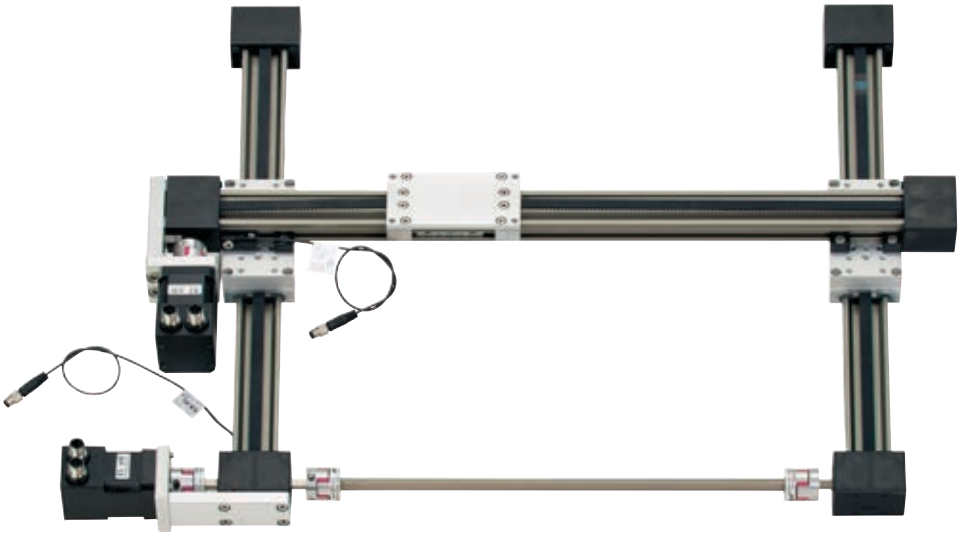

Type: flat gantry
DLE-FG-0001

- **X-axis**: DryLin® ZLW-0630 toothed belt system with NEMA17 stepper motor with encoder
- **Y-axis**: DryLin® ZLW-0630 toothed belt system with NEMA17 stepper motor with encoder

DLE-FG-0002

- **X-axis:** DryLin® ZLW-0630 toothed belt system with NEMA17 stepper motor with stranded wire
- **Y-axis:** DryLin® ZLW-0630 toothed belt system with NEMA17 stepper motor with stranded wire

Technical data

Workspace:	**300 x 300 mm**
Max. speed:	**1.5 m/s**
Max. acceleration:	**10 m/s²**
Repeatability:	**0.3 mm**
Load capacity:	**50 N**

Part No.
DLE-FG-0001 / DLE-FG-0002

Technical data
➤ www.igus.com/drylinE

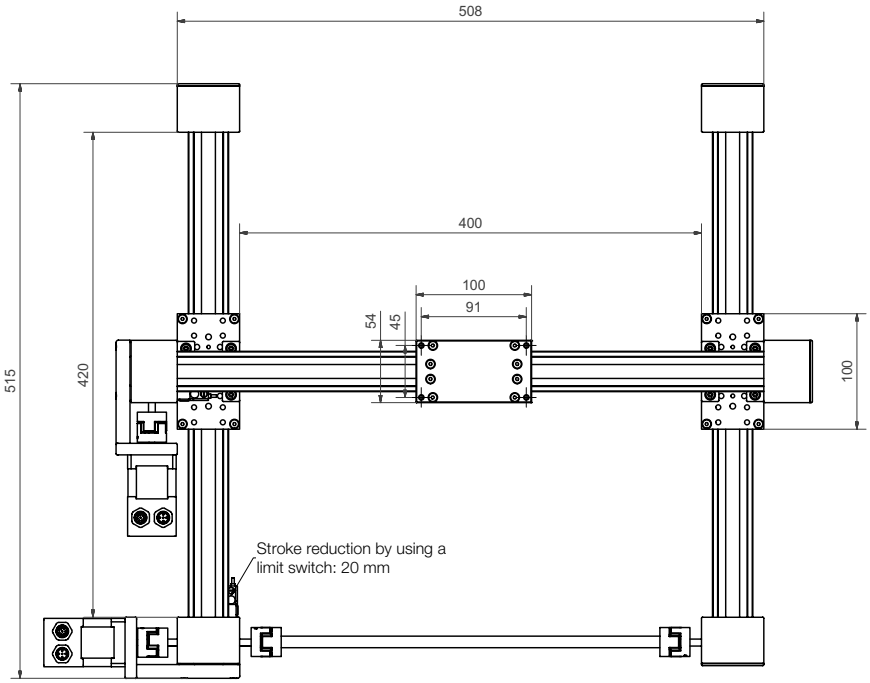

DryLin® E - Multi axes gantries - Product range

Pre-assembled gantry – with or without encoder

Type: room gantry

- **X-axis:** DryLin® ZLW-1040 toothed belt drive with NEMA23 stepper motor with encoder
- **Y-axis**: DryLin® ZLW-1080 toothed belt drive with NEMA23 stepper motor with encoder
- **Z-axis**: DryLin® GRW cantilever drive with gear rack drive and NEMA17 stepper motor with encoder

Technical data

Workspace:	**500 x 500 x 100 mm**
Max. speed:	**0.2 m/s**
Max. acceleration:	**1.5 m/s²**
Repeatability:	**0.8 mm**
Load capacity:	**10 N**

Part No.
DLE-RG-0001

Technical data
➤ www.igus.com/drylinE

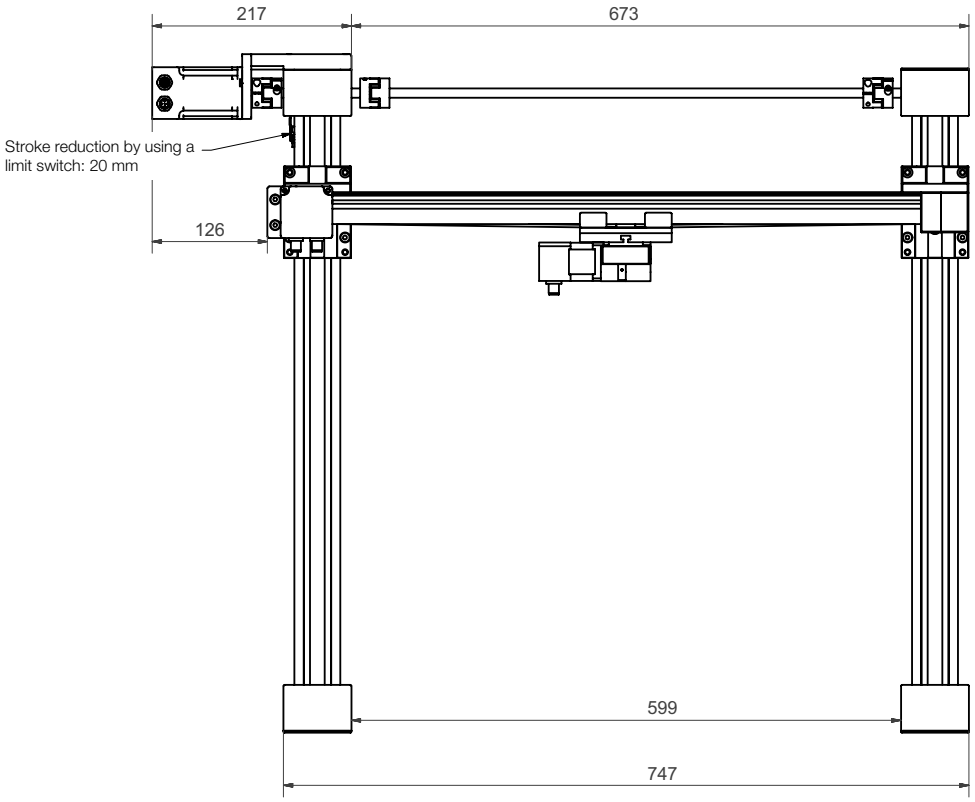

DryLin® E - Accessories

Spacer

The spacer is an aluminum standoff that brings the selected DryLin® linear unit to a height that matches your NEMA motor. An attachment feature for positioning sensors is integrated.

Part No.	Matching linear modules	Height [mm]	Description
STY-104001	SLW-1040	21.0	1 spacer with integrated proximity switch attachment feature. Material: anodized aluminum
STY-108002	SLW-1080	21.0	
STY-166006	SLW-1660	24.5	
STY-20805	SLW-2080	20.0	
STY-121001	HTS-12	17.5	
STY-201801	HTS-20	22.0	

Part No.	Matching linear modules	Description
AK-0001	SLW-1040	2 spacers each, with integrated proximity switch tab including screws. Material: anodized aluminum
AK-0002	SLW-1080	
AK-0003	SLW-1660	
AK-0004	SLW-2080	
AK-0006	HTS-12	
AK-0007	HTS-20	

Adapter kit for simple gantry setup

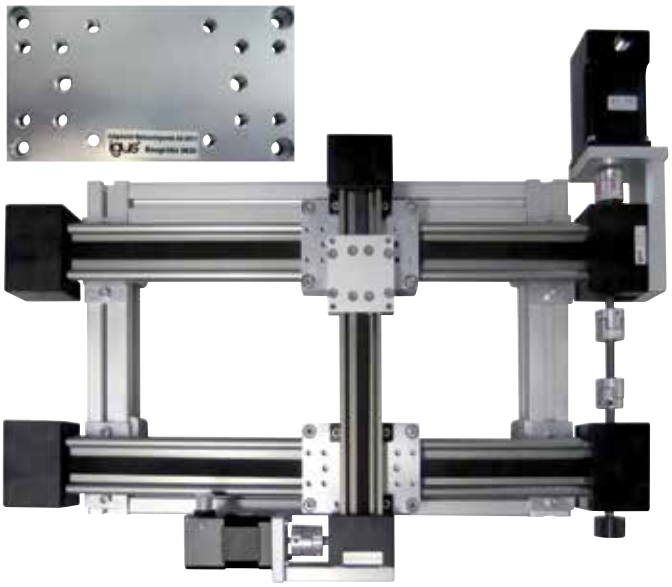

Using adapter kits, multi-axis gantries can be built quickly and easily. Features to attach E-Chain® cable carrier are included.

- Simple and fast multi-axes gantry assembly
- For both lead screw and toothed belt drive
- Energy chain assembly preparation
- Anodized aluminum
- Space and weight reducing

Typical application areas:

- Handling systems,
- Filling and retrieval equipment,
- Feed equipment,
- pick-and-place,
- Gantries,
- "intelligent" conveyor belts and
- Transportation systems.

Part No.	Matching linear modules	Description
AK-0011	ZLW-0630	2 assembly plates for XXY gantry setup, length: 100 mm including 12 screws
AK-0012	ZLW-1040	

DryLin® E - Linear axes with motor

Connecting cables

The ideal complement to the DryLin® E product range provides Chainflex® connecting cables

- Suitable for energy chains®
- Shielded and oil resistant
- Straight and angled connectors

Flange size 42 (NEMA17), 56 (NEMA23), 60 (NEMA23XL)

Part No.	Jacket	Type	Cable length [m]	Connector
Motor cable				
MAT9043737	TPE	CF9-CF-INI	3.0	straight
MAT9043738	TPE	CF9-CF-INI	5.0	straight
MAT9043740	TPE	CF9-CF-INI	10.0	straight
MAT9043742	TPE	CF9-CF-INI	3.0	angled
MAT9043743	TPE	CF9-CF-INI	5.0	angled
MAT9043745	TPE	CF9-CF-INI	10.0	angled
Encoder (harnessed)				
MAT90432594-3	PVC	CF240	3.0	straight
MAT90432594-5	PVC	CF240	5.0	straight
MAT90432594-10	PVC	CF240	10.0	straight
MAT90436430-3	PVC	CF240	3.0	angled
MAT90436430-5	PVC	CF240	5.0	angled
MAT90436430-10	PVC	CF240	10.0	angled

Flange size 86 (NEMA34)

Part No.	Jacket	Type	Cable length [m]	Connector
Motor cable				
MAT90439520-3	PUR	CF78-UL	3.0	straight
MAT90439520-5	PUR	CF78-UL	5.0	straight
MAT90439520-10	PUR	CF78-UL	10.0	straight
Encoder (harnessed)				
MAT90439519-3	PVC	CF211	3.0	straight
MAT90439519-5	PVC	CF211	5.0	straight
MAT90439519-10	PVC	CF211	10.0	straight

Flange size 42 (NEMA17), 56 (NEMA23), 60 (NEMA23XL)

Part No.	Jacket	Type	Cable length [m]	Connector
Brake cable				
MAT9043716	TPE	CF9-CF-INI	3.0	straight
MAT9043717	TPE	CF9-CF-INI	5.0	straight
MAT9043719	TPE	CF9-CF-INI	10.0	straight
MAT9043724	TPE	CF9-CF-INI	3.0	angled
MAT9043725	TPE	CF9-CF-INI	5.0	angled
MAT9043727	TPE	CF9-CF-INI	10.0	angled

DryLin® E - Linear axes with motor

The compact and easy assembly of the proximity sensors are offered in the DryLin® E range. The plastic housing makes the sensors, which can be used as limit, position or reference switches, particularly light and tough.

Technical data

Proximity switches	Unit	
Operating voltage	[VDC]	10...30
Max. trigger current	[mA]	100
Ambient temperature	[°C]	-25...+70
Trigger distance	[SN]	2.5
Protection class		IP67
Connector		M8

20-30 mm of extra stroke length is needed for each limit reference switch.

Axis	Part No.	
	Proximity switch kit	
	N.C./normally closed	N.O./normally open
SAW-0630	IK-0001	IK-0002
SAW-1040	IK-0001	IK-0002
SAW-1660	IK-0003	IK-0004
SLW-BB-0630	-	-
SLW-BB-1040	IK-0006	IK-0017
SLW-BB-1080	IK-0007	IK-0018
SLW-BB-1660	IK-0008	IK-0019
SLW-BB-2080	IK-0009	IK-0020
HTS-BB-12	IK-0011	IK-0022
HTS-BB-20	IK-0012	IK-0023
HTS-BB-30	-	-
SLW-1040-AL	IK-0006	IK-0017
SLW-1080	IK-0007	IK-0018
SLW-1660	IK-0008	IK-0019
SLW-2080	IK-0009	IK-0020
HTS-12	IK-0011	IK-0022
HTS-20	IK-0012	IK-0023
HTS-30	-	-
ZLW-0630-B	IK-0001	IK-0002
ZLW-0630-S	IK-0001	IK-0002
ZLW-1040-B	IK-0001	IK-0002
ZLW-1040-S	IK-0001	IK-0002
ZAW-1040-B	IK-0001	IK-0002
ZAW-1040-S	IK-0001	IK-0002
ZLW-1660-S	IK-0003	IK-0004

Pin assignment

Proximity switch	M8 3 pin	Proximity switch cable	
PIN	Signal	PIN	Colour
1	+	1	Brown
3	-	3	Blue
4	Load	4	Black

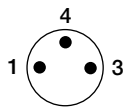

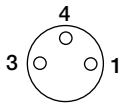

Matching cables are added by including the following attachments:

IK-0010-BG-3

- Cable length = 3m, 5m, 10m
- Connector description
  - BG = straight socket
- Assignment number
- Proximity switch kit

A proximity switch kit for SAW & ZLW includes a proximity switch, a bracket and mounting screws

A proximity switch kit for SLW & HTS includes a proximity switch, two spacers and mounting screws.

DryLin® E - Motor flanges

Motor flange for toothed belt axes

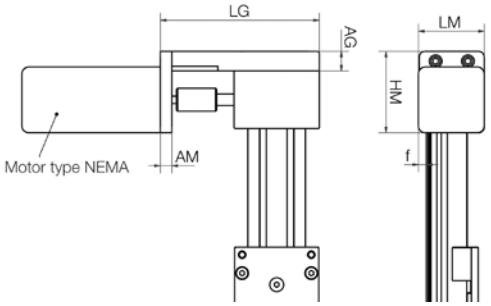

- 2 base plate lengths for each NEMA motor flange; others on request
- Matches the igus® coupling ➤ **Page 1353**

Dimensions [mm]

Part No.	Matching linear modules	Base plate				Motor flange		
		AG	LG	LK	AM	HM	LM	f
MF-0630-NEMA17-S	ZLW-0630	12	99.5	35.5	10	53	42	7
MF-0630-NEMA23-S	ZLW-0630	12	99.5	35.5	10	59	56	14
MF-1040-NEMA17-S	ZLW-1040	17	119	35	10	63	44	-
MF-1040-NEMA23-S	ZLW-1040	17	119	35	10	70.7	56.4	7
MF-1040-NEMA34-L	ZLW-1040	17	138	54	10	85	85	20.5
MF-1660-NEMA34-S	ZLW-1660	10	166	52	10	86	86	-
MF-2260-NEMA23-S	ZAW-1040	10	108	35	10	70.7	56.4	-
MF-0630-DC0310	ZLW-0630	12	99.5	35.5	10	53	42	7
MF-1040-DC0310	ZLW-1040	17	119	35	10	63	44	-

Motor flange for lead screw drives

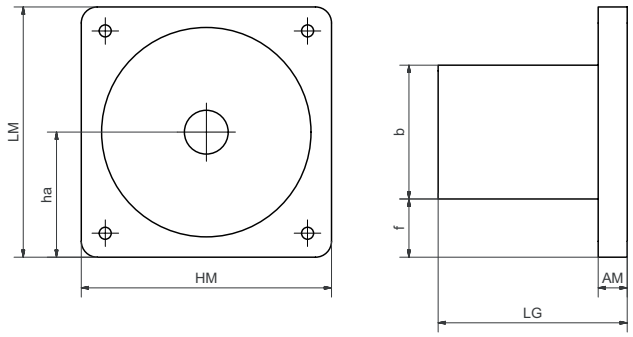

The motor flange, sometimes called motor enclosure, encloses and protects the coupling and provides the matching mounting dimensions for your NEMA motor.

- Matches the igus® coupling ➤ **Page 1353**

Dimensions [mm]

Part No.	Matching linear modules	LG	AM	HM	LM	b	f	ha
MF-1123-NEMA17	SAW/SLW-BB-0630	45	-	43	43	43	-	21.5
MF-2040-NEMA17	SAW/SLW-1040-AL, HTS-12	47	12	56	56	56	-	21.5
MF-2040-NEMA23-S	SAW/SLW-1040-AL, HTS-12/20	48	13	56	56	56	-	28
MF-3648-NEMA23	HTS-20, HTS-BB-20	56	13	56	56	56	-	28
MF-3648-NEMA34	SLW-1660/2080, SLW-BB-1660/2080	65	10	86	86	46	20	43
MF-3648-NEMA34-XL	HTS-30, HTS-BB-30	76	10	86	86	56	15	43
MF-1123-DC0310	SAW/SLW-BB-0630	45	-	43	43	43	-	21.5
MF-2040-DC0310	SAW/SLW-1040-AL, HTS12	47	12	43	43	43	-	21.5

DryLin® E - Couplings

Couplings

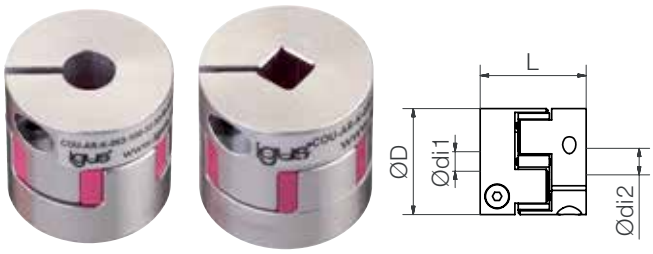

The coupling connects the drive shaft of the linear stage to the motor rotor. An elastic polymer insert in the center of the coupling transfers the motor torque. This damping element compensates for radial and axial misalignments.

- 20 versions from stock
- Vibration dampening

Coupling material: aluminum. TPU elastomeric center. Shore hardness: 98 Sh A. Temperature range -22°F to -148°F (-30°C to +100°C).

Technical data

Belt drive axis	Motor	Coupling	D	di1	di2	L	Weight
				[mm]	[mm]	[mm]	[kg]
ZLW-0630-B	NEMA17	COU-AR-K-050-000-25-26-B-AAAB	25.00	5.00	□6.00*	26.00	0.02
	NEMA23	COU-AR-K-063-000-25-26-B-AAAB	25.00	6.35	□6.00*	26.00	0.02
	DC-Motor31	COU-AR-K-060-000-25-26-B-AAAB	25.00	6.00	□6.00*	26.00	0.02
ZLW-0630-S	NEMA17	COU-AR-K-050-080-25-26-B-AAAA	25.00	5.00	8.00	26.00	0.02
	NEMA23	COU-AR-K-063-080-25-26-B-AAAA	25.00	6.35	8.00	26.00	0.02
	DC-Motor31	COU-AR-K-060-080-25-26-B-AAAA	25.00	6.00	8.00	26.00	0.02
ZLW-1040-B / ZAW	NEMA17	COU-AR-K-050-000-25-26-B-AAAB	25.00	5.00	□6.00*	26.00	0.02
	NEMA23	COU-AR-K-063-000-25-26-B-AAAB	25.00	6.35	□6.00*	26.00	0.02
	NEMA23XL	COU-AR-K-080-000-25-26-B-AAAB	25.00	8.00	□6.00*	26.00	0.02
	DC-Motor31	COU-AR-K-060-000-25-26-B-AAAB	25.00	6.00	□6.00*	26.00	0.02
ZLW-1040-S / ZAW	NEMA23	COU-AR-K-063-100-32-32-B-AAAA	32.00	6.35	10.00	32.00	0.05
	NEMA23XL	COU-AR-K-080-100-32-32-B-AAAA	32.00	8.00	10.00	32.00	0.05
	NEMA34	COU-AR-K-140-100-32-32-B-AAAA	32.00	14.00	10.00	32.00	0.05
	DC-Motor31	COU-AR-K-060-100-32-32-B-AAAA	32.00	6.00	10.00	32.00	0.05
ZLW-1660-S	NEMA 34	COU-AR-K-140-140-32-32-B-AAAA	32.00	14.00	14.00	32.00	0.05
Lead screw axis	**Motor**	**Coupling**	**D**	**di1**	**di2**	**L**	**Weight**
				[mm]	[mm]	[mm]	[kg]
SAW-0630 / SLW-BB-0630	NEMA17	COU-AR-K-050-080-25-26-B-AAAA	25.00	5.00	8.00	26.00	0.02
	DC-Motor31	COU-AR-K-060-080-25-26-B-AAAA	25.00	6.00	8.00	26.00	0.02
SAW-1040 / SLW-(BB)-1040	NEMA17	COU-AR-K-050-100-32-32-B-AAAA	32.00	5.00	10.00	32.00	0.05
	NEMA23	COU-AR-K-063-100-32-32-B-AAAA	32.00	6.35	10.00	32.00	0.05
	NEMA23XL	COU-AR-K-080-100-32-32-B-AAAA	32.00	8.00	10.00	32.00	0.05
	DC-Motor31	COU-AR-K-060-100-32-32-B-AAAA	32.00	6.00	10.00	32.00	0.05
SLW-(BB)-1660	NEMA23	COU-AR-K-063-140-32-32-B-AAAA	32.00	6.35	14.00	32.00	0.05
	NEMA23XL	COU-AR-K-080-140-32-32-B-AAAA	32.00	8.00	14.00	32.00	0.05
SLW-(BB)-2080	NEMA23	COU-AR-K-063-120-32-32-B-AAAA	32.00	6.35	12.00	32.00	0.05
	NEMA23XL	COU-AR-K-080-120-32-32-B-AAAA	32.00	8.00	12.00	32.00	0.05
	NEMA34	COU-AR-K-140-120-32-32-B-AAAA	32.00	14.00	12.00	32.00	0.05
HTS-(BB)-12	NEMA17	COU-AR-K-050-100-32-32-B-AAAA	32.00	5.00	10.00	32.00	0.05
	NEMA23	COU-AR-K-063-100-32-32-B-AAAA	32.00	6.35	10.00	32.00	0.05
	NEMA23XL	COU-AR-K-080-100-32-32-B-AAAA	32.00	8.00	10.00	32.00	0.05
	DC-Motor31	COU-AR-K-060-100-32-32-B-AAAA	32.00	6.00	10.00	32.00	0.05
HTS-(BB)-20	NEMA23	COU-AR-K-063-120-32-32-B-AAAA	32.00	6.35	12.00	32.00	0.05
	NEMA23XL	COU-AR-K-080-120-32-32-B-AAAA	32.00	8.00	12.00	32.00	0.05
	NEMA34	COU-AR-K-140-120-32-32-B-AAAA	32.00	14.00	12.00	32.00	0.05
HTS-(BB)-30	NEMA34	COU-AR-K-140-140-32-32-B-AAAA	32.00	14.00	14.00	32.00	0.05

* □ = Square

DryLin® E - NEMA stepper motors

Various stepper motor options

Motor with stranded wires

Motors with stranded wires are the least expensive and the most common stepper motors. The connecting wires for this type directly exit from the housing. They are preferably installed in machines and equipment that have an additional housing or are used in clean environments.

Motor with connector

The connector interface provides a high IP65 protection level (IP: International Protection). The higher the IP rating, the better the motor is protected from the ingress of dirt and water.

Motor with connector and encoder

The encoder sends signals from the motor to the motor control. The encoder verifies that the required linear motion has occurred precisely as required.
Encoder = increased machine accuracy.

Motor with connector, encoder and brake

The brake can hold the payload in position when the motor is not under power. This is used as a safety feature during power failures – recommended for vertically mounted systems.

Installation sizes of NEMA stepper motors

NEMA11: Tiny but with plenty of power

This motor has very compact dimensions, although heavy loads still can be moved with the suitable lead screw pitch. This motor is typically used on small test and analysis equipment and miniature adjustments.

- The holding moment, Mo is 0.13 Nm

NEMA17: Small, but lots of power

This little motor has impressive torque and high RPMs.
Reliable operation at fast travel with low loads.

- The holding moment, Mo is 0.5 Nm

NEMA23: Most common

Versatile choice due to the high torque and rotational speed.
This motor is the best choice for most applications with medium loads.

- The holding moment, Mo is 2.0 Nm

NEMA23XL: High output

A development extension of the typical NEMA23 with nearly twice the torque.
The assembly dimensions are identical to the NEMA23, allowing many applications.

- The holding moment, Mo is 3.5 Nm

NEMA34: Large frame

Large NEMA framed motor for high loads and speeds.

- The holding moment, Mo is 5.9 Nm

DryLin® E - Stepper motors - Technical data

Technical data

Distance over hubs		28	42	56	60	86
Motor		**NEMA11**	**NEMA17**	**NEMA23**	**NEMA23XL**	**NEMA34**
Maximum voltage	[VDC]	60	60	60	60	60
Nominal voltage	[VDC]	24-48	24-48	24-48	24-48	24-48
Nominal current	[A]	1.0	1.8	4.2	4.2	6.4
Holding torque	[Nm]	0.13	0.5	2.0	3.5	5.9
Ratchet torque	[Nm]	0.004	0.022	0.068	0.075	0.210
Step angle	°	1.8	1.8	1.8	1.8	1.8
Resistance/phase	[Ω]	2.30 ±10%	1.75 ±10%	0.5 ±10%	0.65 ±10%	0.33 ±10%
Inductivity/phase	[mH]	1.40 ±20%	3.30 ±20%	1.90 ±20%	3.20 ±20%	3.00 ±20%
Moment of inertia - rotor	[kgcm²]	0.02	0.08	0.48	0.84	2.70
Shaft load, axial	[N]	7	7	15	15	65
Shaft load, radial	[N]	20	20	52	63	200

Encoder		
Operating voltage	[VDC]	5
Signals/rotation	[1/min]	500
Zero signal/index		yes
Line driver		RS422 Protocol

Signal shape (Clock-wise motor rotation) [CW]

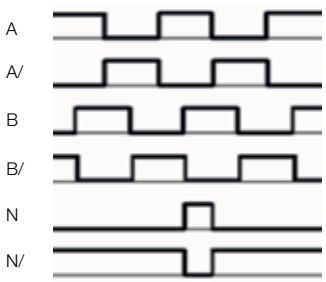

Technical data

Distance over hubs		28 (NEMA11)	42 (NEMA17)	56 (NEMA23)	60 (NEMA23XL)	86 (NEMA34)
Brake						
Operating voltage	[VDC]	-	24 ±10%	24 ±10%	24 ±10%	24 ±10%
Output rating	[W]	-	8	10	10	11
Holding torque	[Nm]	-	0.4	1.0	1.0	2.0
Moment of inertia	[kgcm²]	-	0.01	0.02	0.02	0.07

Distance over hubs		28 (NEMA11)	42 (NEMA17)	56 (NEMA23)	60 (NEMA23XL)	86 (NEMA34)
Weight						
Product weight	[kg]	0.25	0.32	1.12	1.56	3.20
With encoder	[kg]	0.27	0.34	1.14	1.58	3.30
With encoder and brake	[kg]	-	0.58	1.36	1.82	3.60

Operating data		
Ambient temperature	[°C]	-10 up to +50
Max. allowable temperature increase	[°C]	80
Insulation class		B
Air humidity (non condensing)	[%]	85
IP rating - motor housing		IP65 (shaft seal IP52, motor with stranded wires IP40)
CE conformity		EVM directive

DryLin® E - Stepper motors - Characteristic curves

Chartacteristic curves

Flange size 28 (NEMA11)

MOT-AN-S-060-001-028-…

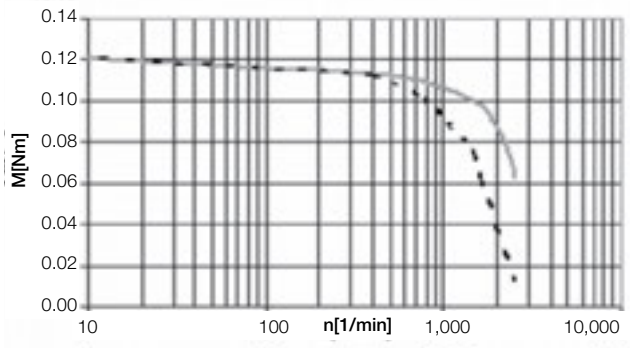

Flange size 42 (NEMA17)

MOT-AN-S-060-005-042-…

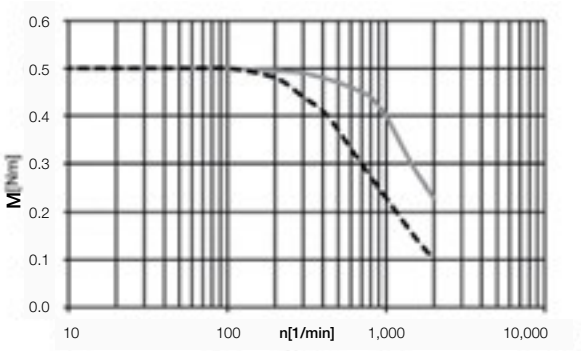

Flange size 56 (NEMA23)

MOT-AN-S-060-020-056-...

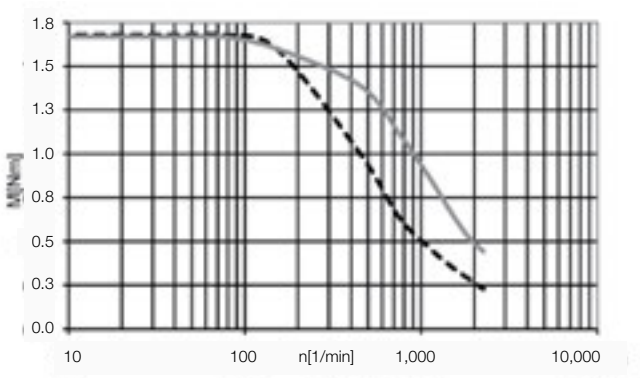

Flange size 60 (NEMA23XL)

MOT-AN-S-060-035-060-…

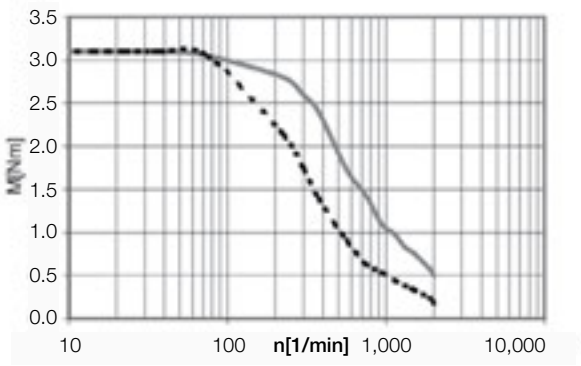

Flange size 86 (NEMA34)

MOT-AN-S-060-059-086-…

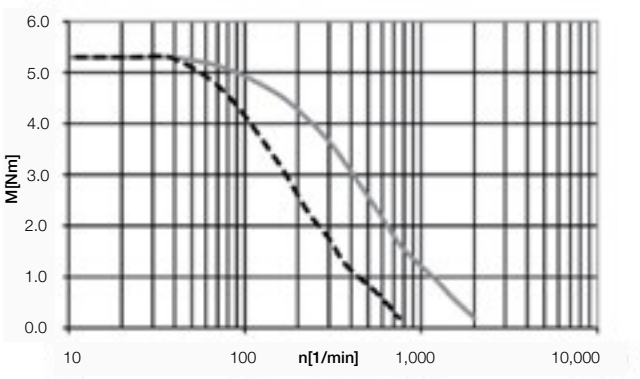

------- 24 VDC ——— 48 VDC

The characteristic curves are determined in quarter step mode

DryLin® E - Stepper motors - Order key

Order key

MOT-AN-S-060-020-056-M-A-AAAA

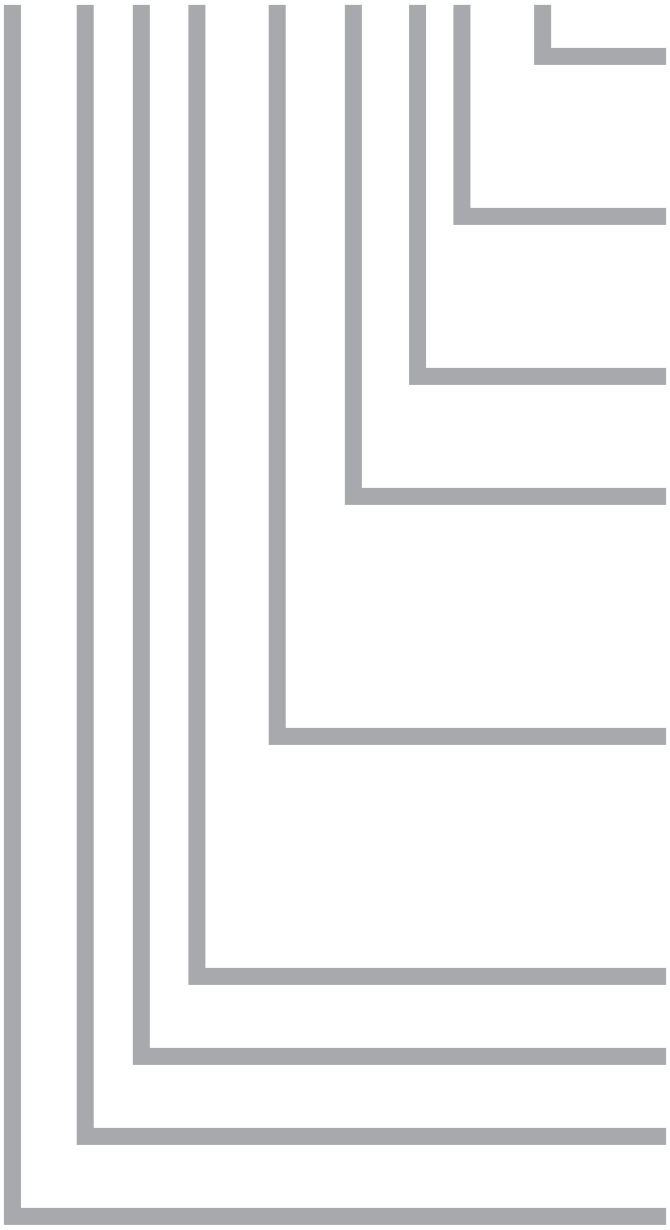

Specification
- **AAAA:** Standard
- **AAAC:** Encoder
- **AAAD:** Encoder & brake

Options
- **A:** Without
- **C:** Incremental encoder
- **D:** Incremental encoder & brake

Motor connection
- **M:** Metric connector
- **L:** Stranded wires

Distance over hubs
- **028:** 28 mm (NEMA11)
- **042:** 42 mm (NEMA17)
- **056:** 56 mm (NEMA23)
- **060:** 60 mm (NEMA23XL)
- **086:** 86 mm (NEMA34)

Holding torque
- **001:** 0.1 Nm
- **005:** 0.5 Nm
- **020:** 2.0 Nm
- **035:** 3.5 Nm
- **059:** 5.9 Nm

Maximum voltage
- **060:** 60 V/DC

Motor
- **S:** Stepper motor

Type
- **AN:** Design

Product type
- **MOT:** Motor

DryLin® E - DC motors

DC motor with spur gear

This small DC motor can be powered directly from a power source, such as a battery. It reverses direction by changing the polarity. Typical applications are sensor/camera travel and light-duty format adjustments with DryLin® lead screw or toothed belt axes.

- Torque Mn from 0.1 Nm to 1.5 Nm
- Up to 440 RPM
- Can be operated at 12 & 24 VDC

Technical data

MOT-AE-B-024-015-037-F-A-AAAA
MOT-AE-B-024-007-037-F-A-AAAA
MOT-AE-B-024-003-037-F-A-AAAA
MOT-AE-B-024-001-037-F-A-AAAA

Motor					
Maximum voltage	[VDC]	24	24	24	24
Nominal voltage	[VDC]	24	24	24	24
Nominal current	[A]	0.5	0.5	0.5	0.5
Nominal torque	[Nm]	0.1	0.3	0.7	1.5
Startup torque	[Nm]	0.3	0.5	1.0	1.8
Idling speed	[1/min]	440	146	58	22
Rated speed	[1/min]	350	112	47	17
Shaft load, axial	[N]	6.8	6.8	6.8	6.8
Shaft load, radial	[N]	9.8	9.8	9.8	9.8
Reduction gearing	[N]	10	30	75	200

Weight					
Product weight	[kg]	0.207	0.213	0.221	0.270

Operating data		
Ambient temperature	[°C]	-10 up to +60
Max. allowable temperature increase	[°C]	60
Air humidity (non condensing)	[%]	85
IP rating - motor housing		IP30
Operating mode		S2 (short term operation)

Motor connector assignments	
Low profile connector	Length 7 mm, width 4 mm, thickness 0.45 mm

DryLin® E - DC motors - Characteristic curves

Characteristic curves 24 VDC

MOT-AE-B-024-001-037-F-A-AAAA

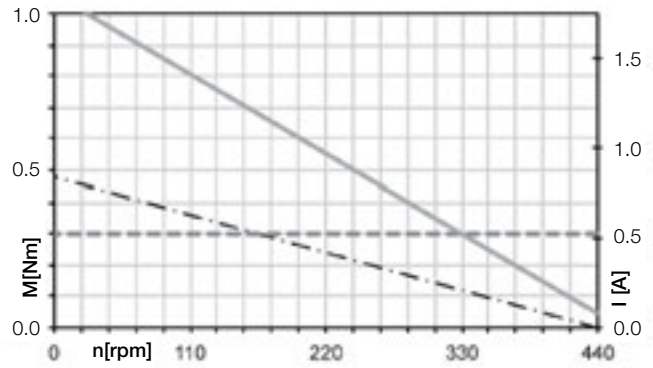

MOT-AE-B-024-003-037-F-A-AAAA

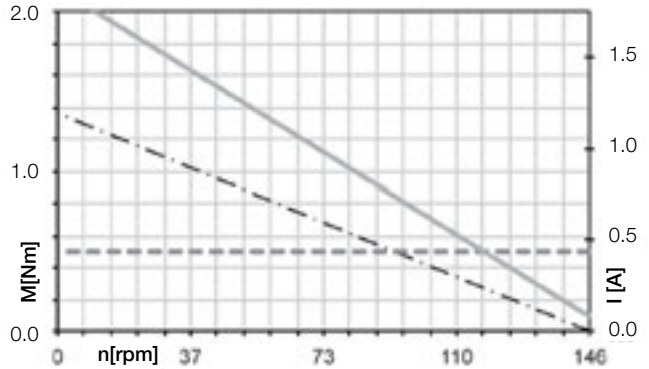

MOT-AE-B-024-007-037-F-A-AAAA

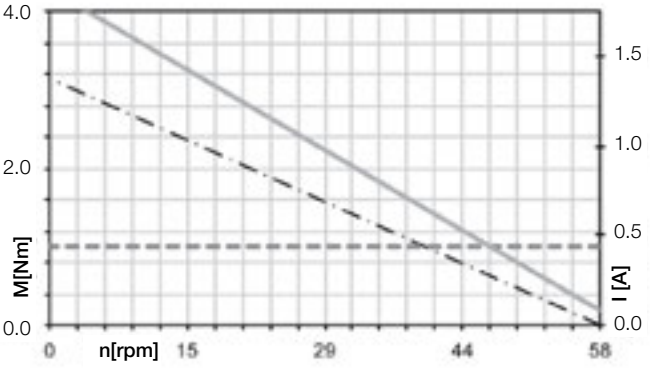

MOT-AE-B-024-015-037-F-A-AAAA

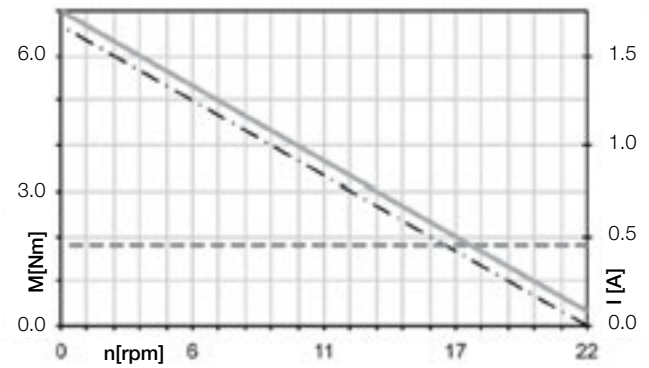

Characteristic curves 12 VDC

MOT-AE-B-024-001-037-F-A-AAAA

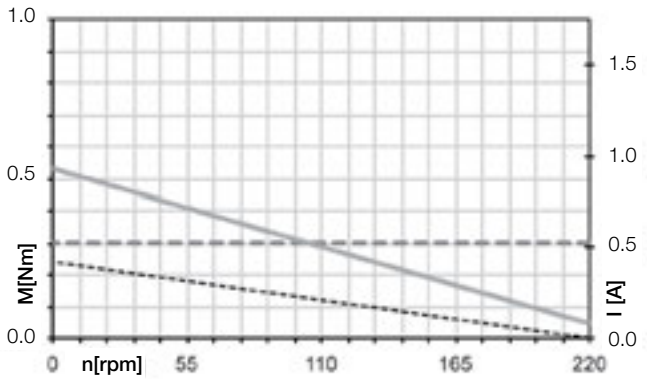

MOT-AE-B-024-003-037-F-A-AAAA

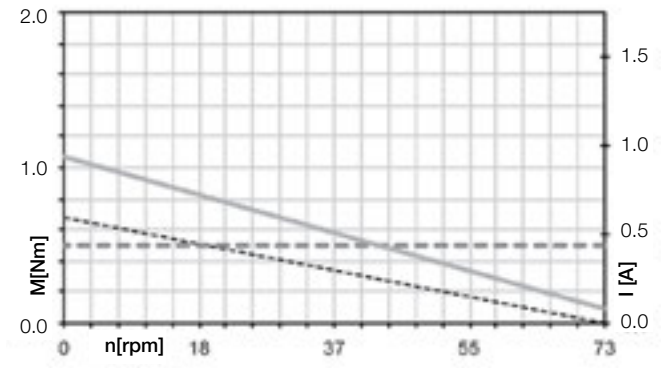

MOT-AE-B-024-007-037-F-A-AAAA

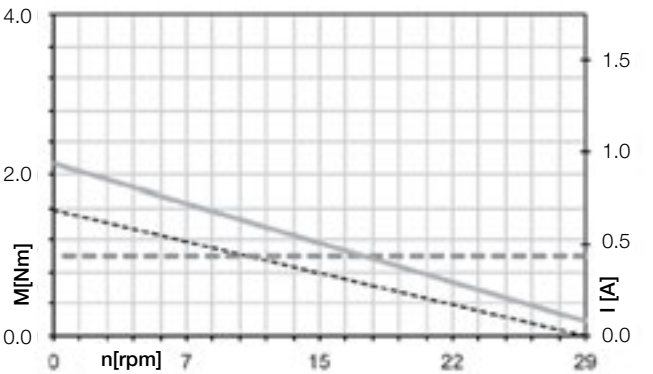

MOT-AE-B-024-015-037-F-A-AAAA

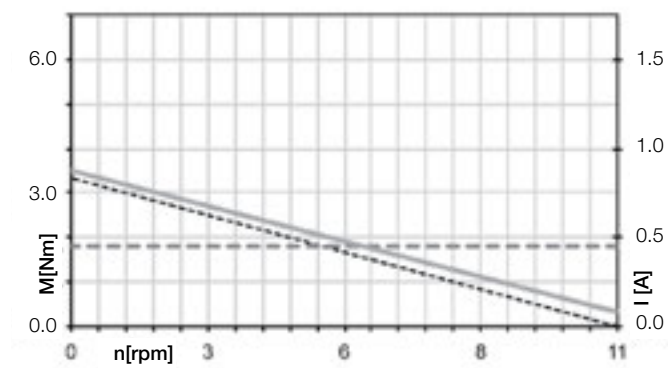

------- Torque ------- Max. continuous torque —— Motor current

DryLin® E - DC motors

DC motor with spur gear

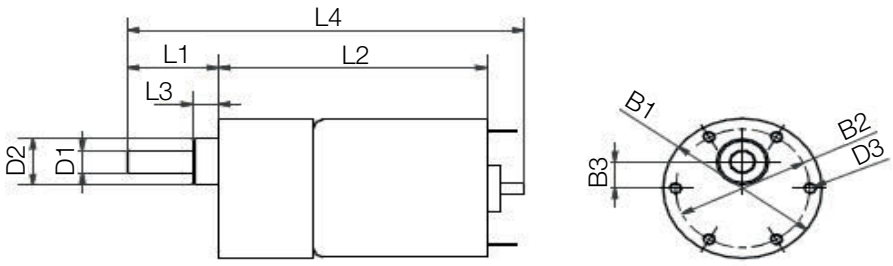

Dimensions [mm]

Part No.	B1	B1	B2	B3	D1	D2	D3	L1	L2	L3	L4
			±0.2	±0.1	-0.013	±0.025		±1	±1		
MOT-AE-B-024-001-037-F-A-AAAA	37.0	38.0	31	7	6	12	M3	21.0	59.5	6.0	92.5
MOT-AE-B-024-003-037-F-A-AAAA	37.0	38.0	31	7	6	12	M3	21.0	62.0	6.0	95
MOT-AE-B-024-007-037-F-A-AAAA	37.0	38.0	31	7	6	12	M3	21.0	64.5	6.0	97.5
MOT-AE-B-024-015-037-F-A-AAAA	37.0	38.0	31	7	6	12	M3	21.0	67.0	6.0	100.0

Order key

MOT-AE-B-024-015-037-F-A-AAAA

Specification
AAAA: Standard
Options
A: Without
Motor connection
F: Low profile connector
Outer diameter
037: 37 mm
Nominal torque
001: 0.1 Nm
003: 0.3 Nm
007: 0.7 Nm
015: 1.5 Nm
Operating voltage
024: 24 V/DC
Motor
B: DC Motor
Type
AE: Design
Product type
MOT: Motor